Assembly Design

Overview
- Conventions

What's New?

Getting Started
- Entering Assembly Design Workbench and Opening a CATProduct Document
- Fixing a Component
- Inserting an Existing Component
- Setting Constraints Between Components
- Moving Constrained Components Using the Compass
- Adding and Renaming a New Component
- Designing a Part in an Assembly Context
- Editing a Parameter
- Replacing a Component
- Analyzing Assembly Constraints
- Reconnecting a Broken Constraint
- Detecting Clashes
- Editing a Component
- Displaying the Bill of Material
- Exploding the Assembly

User Tasks
- Creating an Assembly Document
- Updating an Assembly
- Analyzing an Assembly
  - Computing a Clash
  - Computing a Clearance
  - Analyzing Constraints
  - Analyzing Dependencies
  - Analyzing Updates
  - Analyzing Degrees of Freedom
- Defining a Multi-Instantiation
- Fast Multi-Instantiation
- Inserting an Existing Component with Positioning
- Managing Constraints
  - Creating a Coincidence Constraint
  - Creating a Contact Constraint
  - Creating an Offset Constraint
  - Creating an Angle Constraint
  - Fixing a Component
  - Fixing Components Together
  - Using the Quick Constraint Command

- Changing Constraints
- Deactivating or Activating Constraints
- Selecting the Constraints of Given Components
- Editing Constraints
- Updating One Constraint Only
- Modifying the Properties of a Constraint
- Setting a Constraint Creation Mode
- Inconsistent or Overconstrained Assembly
- Searching for URLs Associated with Constraints
- Reordering Constraints in the Specification Tree
- Refreshing Constraints

Moving Components
- Translating Components
- Rotating Components
- Manipulating Components
- Snapping Components
- Smart Move
- Smart Move with Viewer
- Exploding a Constrained Assembly
- Stop Manipulation on Clash

Using Assembly Tools
- Managing Products in an Assembly
- Publishing Elements
- Using a Standard Part Contained in a Parametric Catalog
- Modifying a Parametric Standard Part Contained in a Catalog

Creating Annotations
- Creating Weld Features
- Creating a Text With Leader
- Creating a Flag Note With Leader

Detecting Clashes
- Detecting Interferences
- Reading Clash Command Results
- Viewing Results in a Dedicated Window
- Export Clash Results

Sectioning
- About Sectioning
- Creating Section Planes
- Creating 3D Section Cuts
- Manipulating Planes Directly
- Positioning Planes On a Geometric Target
- Positioning Planes Using the Edit Position and Dimensions Command
- More About the Section Viewer

Measuring Minimum Distances

Improving Performances

Generating CATPart from Product

Displaying the Assembly Mass Properties

Modifying an Assembly
- Replacing Components
- Reconnecting a Replaced Representation
- Reconnecting Constraints

Editing a CATPart in an Assembly Design Context
Assembly Features
Assembly Split
Assembly Hole
Using Hole Series
Assembly Pocket
Assembly Remove
Assembly Add
Assembly Symmetry
Performing a Symmetry
Modifying a Symmetry
Rotating a Component by Using the Symmetry Command
Flexible Sub-Assemblies
Reusing a Part Design Pattern
Managing Part and Assembly Templates
Introducing the Document Template Definition Window
Creating a Part Template
Instantiating a Part Template
Adding an External Document to a Document Template
Document Templates: Methodology
To know more about Part and Assembly Templates...
Document Templates: Limitations
Managing Enhanced Scenes
About Enhanced Scenes
Creating an Enhanced Scene
Generating an Enhanced Scene from an Old Scene
Browsing Enhanced Scenes using the Scenes Browser
Activating an Enhanced Scene
Exploding an Assembly
Overloading Product Position in Enhanced Scene Context
Adding, Replacing and Deleting Components in the Assembly
Checking Component Position
Saving a Viewpoint in Enhanced Scene Context
Creating an Enhanced Scene Macro
Applying an Enhanced Scene Context to an Assembly
Applying an Assembly Context to an Enhanced Scene
Automating Enhanced Scene Context Application Using User-defined Attributes
Saving an Enhanced Scene in ENOVIAVPM
Exiting Enhanced Scene Context
Selecting Using a Filter

Interoperability

Opening a CATIA Version 4 Assembly Document
Optimal CATIA PLM Usability for Assembly Design

Workbench Description

Assembly Design Menu Bar
Product Structure Tools Toolbar
Move Toolbar
Update Toolbar
Constraints Toolbar

Assembly Features Toolbar
Annotations Toolbar
Space Analysis Toolbar
Scenes Toolbar
User Selection Filter Toolbar
Miscellaneous Symbols
Specification Tree
Symbols Reflecting an Incident in the Geometry Building
Referenced Geometry

Customizing

General
Constraints
DMU Sectioning
Symbols
Tolerancing
Display
Manipulators
Annotation
View/Annotation Plane
Cache Management for CATProduct and CATProcess Document
Cgr Management for 3D Annotation
Loading of Referenced Document

Reference Information

Assembly Update
Constraints
About Assembly Constraints
Coincidence Constraints
Contact Constraints
Offset Constraints
Angle Constraints
Design in Assembly Context
Assembly Features
Batches and Macros
Data Upgrade for Large Assemblies Performances

Glossary

Index

Overview

Welcome to the Assembly Design User's Guide!
This guide is intended for users who need to become quickly familiar with the product.

This overview provides the following information:

- Assembly Design in a Nutshell
- Before Reading this Guide
- Getting the Most Out of this Guide
- Accessing Sample Documents
- Conventions Used in this Guide

Assembly Design in a Nutshell

Assembly Design allows the design of assemblies with an intuitive and flexible user interface.

As a scalable workbench, Assembly Design can be cooperatively used with other current companion products such as Part Design and Generative Drafting.
The widest application portfolio in the industry is also accessible through interoperability with Solutions Version 4 to enable support of the full product development process from initial concept to product in operation.
Digital Mock-Up (DMU) Navigator inspection capabilities can also be used to review and check your assemblies. Interactive, variable-speed techniques such as walk-through and fly as well as other viewing tools let you visually navigate through large assemblies.

The Assembly Design User's Guide has been designed to show you how to create an assembly starting from scratch. This book aims at illustrating the several stages of creation you may encounter.

Before Reading this Guide

Before reading this guide, you should be familiar with basic Version 5 concepts such as document windows, standard and view toolbars. Therefore, we recommend that you read the *Infrastructure User's Guide* that describes generic capabilities common to all Version 5 products. It also describes the general layout of V5 and the interoperability between workbenches.

You may also like to read the following complementary product guides, for which the appropriate license is required:

- *Product Structure*
- *Part Design*

- *Generative Drafting*
- *V4 Integration*

Getting the Most Out of this Guide

To get the most out of this guide, we suggest that you start reading and performing the step-by-step Getting Started tutorial.

Once you have finished, you should move on to the User Tasks section, which deals with handling all the product functions.

The Workbench Description section, which describes the Assembly Design workbench, and the Customizing section, which explains how to set up the options, will also certainly prove useful.

Navigating in the Split View mode is recommended. This mode offers a framed layout allowing direct access from the table of contents to the information.

Accessing Sample Documents

To perform the scenarios, sample documents are provided all along this documentation. For more information about this, refer to Accessing Sample Documents in the Infrastructure User's Guide.

Conventions

Certain conventions are used in CATIA, ENOVIA & DELMIA documentation to help you recognize and understand important concepts and specifications.

Graphic Conventions

The three categories of graphic conventions used are as follows:

- Graphic conventions structuring the tasks
- Graphic conventions indicating the configuration required
- Graphic conventions used in the table of contents

Graphic Conventions Structuring the Tasks

Graphic conventions structuring the tasks are denoted as follows:

This icon...	Identifies...
	estimated time to accomplish a task
	a target of a task
	the prerequisites
	the start of the scenario
	a tip
	a warning
	information
	basic concepts
	methodology
	reference information
	information regarding settings, customization, etc.
	the end of a task

functionalities that are new or enhanced with this release

allows you to switch back to the full-window viewing mode

Graphic Conventions Indicating the Configuration Required

Graphic conventions indicating the configuration required are denoted as follows:

This icon...	Indicates functions that are...
	specific to the P1 configuration
	specific to the P2 configuration
	specific to the P3 configuration

Graphic Conventions Used in the Table of Contents

Graphic conventions used in the table of contents are denoted as follows:

This icon...	Gives access to...
	Site Map
	Split View mode
	What's New?
	Overview
	Getting Started
	Basic Tasks
	User Tasks or the Advanced Tasks
	Workbench Description
	Customizing
	Reference
	Methodology
	Glossary
	Index

Text Conventions

The following text conventions are used:

- The titles of CATIA, ENOVIA and DELMIA documents *appear in this manner* throughout the text.
- **File** -> **New** identifies the commands to be used.
- Enhancements are identified by a blue-colored background on the text.

How to Use the Mouse

The use of the mouse differs according to the type of action you need to perform.

Use this mouse button...	Whenever you read...
	• Select (menus, commands, geometry in graphics area, ...) • Click (icons, dialog box buttons, tabs, selection of a location in the document window, ...) • Double-click • Shift-click • Ctrl-click • Check (check boxes) • Drag • Drag and drop (icons onto objects, objects onto objects)
	• Drag • Move
	• Right-click (to select contextual menu)

What's New?

New Functionalities

Selecting Using a Filter

This new filter allows you to refine the feature/geometrical element you want to select in a constraint definition. Geometrical elements available are: point, line or curve, plane or surface, as feature or as geometrical element.

Refreshing Constraints

This new contextual command allows you to refresh the status for constraints based on published elements in a missing component. The status for these constraints is re-evaluated when you insert a component only, according to its published elements.

Enhanced Functionalities

Data Upgrade for Large Assemblies Performances

This utility is also now available through an user interface. The same functionalities as the batch command are offered. The user interface is available from the Tools -> Utilities menu item, CATAsmUpgadeBatch utility.

Displaying the Assembly Mass Properties

The mass property of any assembly component is available from its Product Properties, in the Mechanical tab. The mass property is now also available in Visualization mode and you can refine the mass to the main body or all the bodies of a Part component. The mass property is set according to the part material. If any material has been defined, a density of 1 is taken into account.

Customizing Settings

Cgr Management for 3D Annotation

A new option allows you to take into account 3D Annotations in cgr documents. 3D Annotations are now displayed in Visualization mode.

Getting Started

If in Sketcher and Part Design you generated parts, now will learn how to finish your design by assembling parts in Assembly Design workbench.
Before we discuss the detailed instructions for using the Assembly workbench, the following scenario aims at giving you a feel for what you can do with an Assembly document. You just need to follow the instructions as you progress.

The Getting Started section is composed of the following tasks:

Entering Assembly Design Workbench and Opening a CATProduct Document
Fixing a Component
Inserting an Existing Component
Setting Constraints Between Components
Moving Constrained Components Using the Compass
Adding and Renaming a New Component
Designing a Part in an Assembly Context
Editing a Parameter
Replacing a Component
Analyzing Assembly Constraints
Reconnecting a Broken Constraint
Detecting Clashes
Editing a Component
Displaying the Bill of Material
Exploding the Assembly

This scenario should take about 15 minutes to complete.

Eventually, the assembly will look like this:

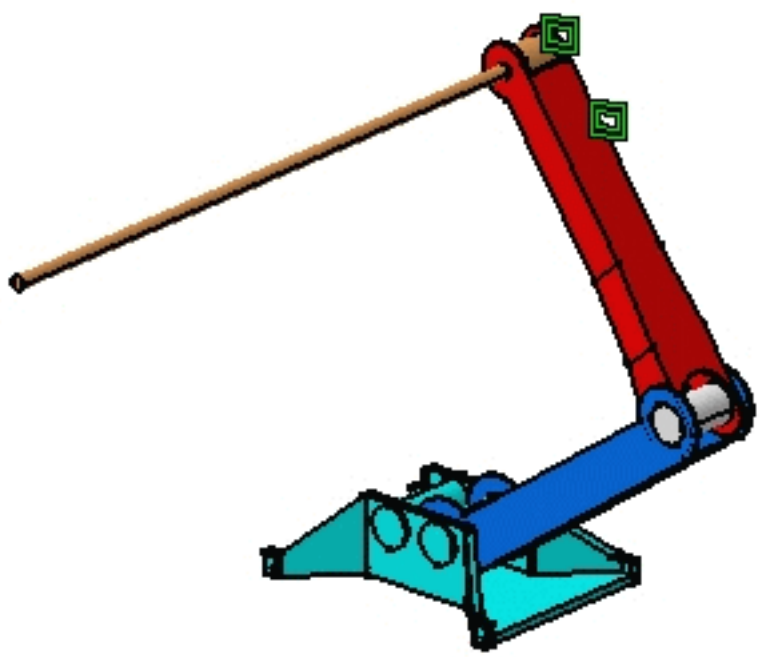

Entering Assembly Design Workbench and Opening a CATProduct Document

This first task shows you how to enter **Assembly Design** workbench and how to open an existing product.

1. Select the **Start -> Mechanical Design -> Assembly Design** command to launch the required workbench.

   The workbench is opened. The commands for assembling parts are available in the toolbar to the right of the application window. For information on these commands, please refer to Product Structure documentation.
   You will notice that **Product1** is displayed in the specification tree, indicating the building block of the assembly to be created.

   To know how to use the commands available in the Standard and View toolbars located in the application window border, please refer to Infrastructure documentation.

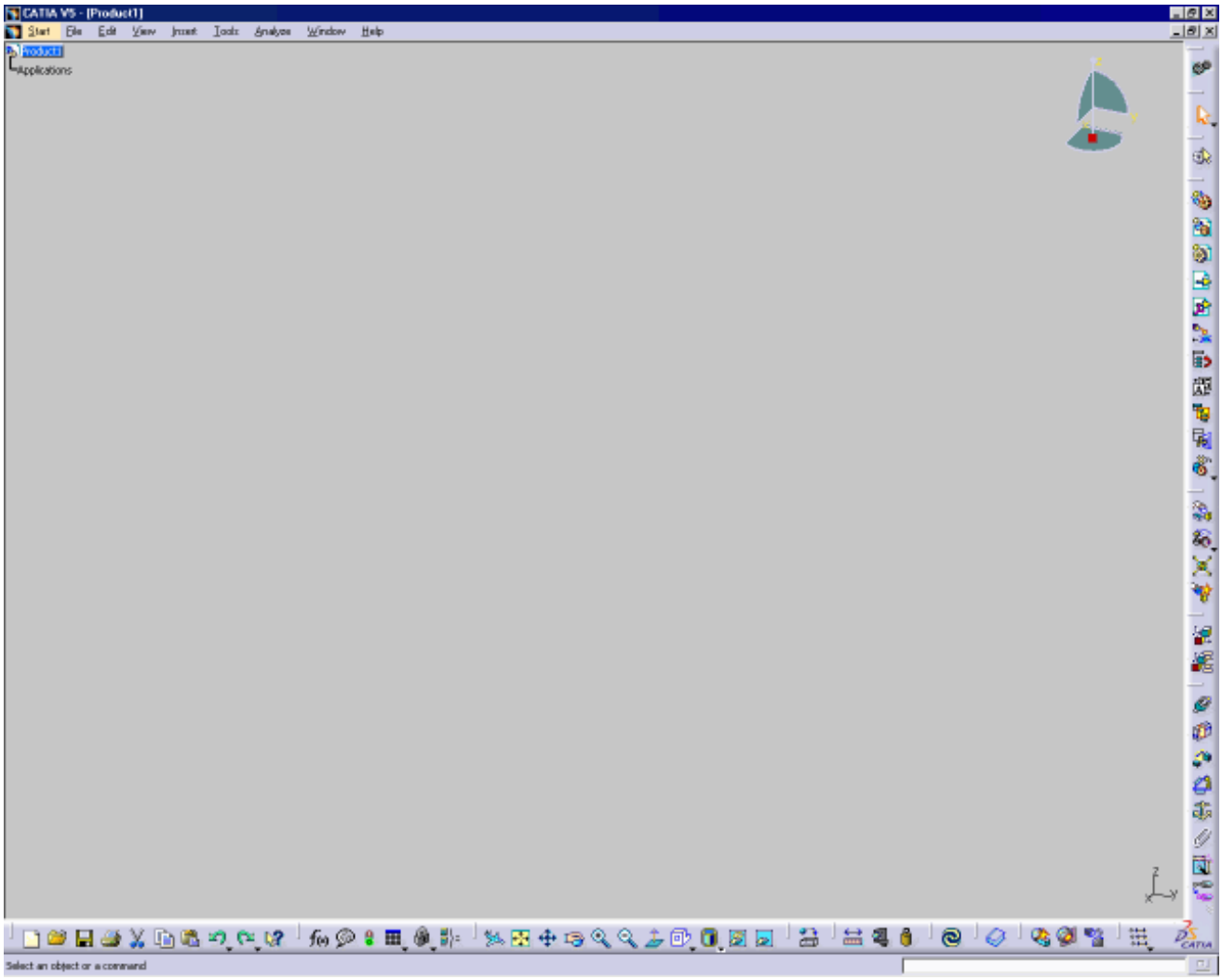

2. Before following the scenario, set the following options:

- make sure the option Work with the cache system is deactivated : use the **Tools -> Options** command, click **Infrastructure -> Product Structure** to the left of the dialog box that appears and uncheck the option **Work with the cache system**. Do not forget to restart the application after turning off the cache.
  For more information, refer to Working with a Cache System.
- use the **Tools -> Options** command, click **Infrastructure -> Product Structure** to the left of the dialog box that appears, then click the **Product Structure** tab and uncheck the option **Manual Input**.
  For more information, refer to Customizing Product Structure Settings.
- use the **Tools -> Options** command, click **Infrastructure ->Part Infrastructure** to the left of the dialog box that appears, then check the option **Keep link with selected Object**.
  For more information, refer to Customizing General Settings.

Note also that the default mode for the Update capability is "manual". For the purposes of this scenario, set the automatic mode.

3. Open the Assembly_01.CATProduct document.

You will start the scenario with an existing assembly. Product1 is composed of three parts created in the Part Design Workbench:

- **CRIC_FRAME** (in turquoise)
- **CRIC_BRANCH_3** (in blue)
- **CRIC_BRANCH_1** (in red)

From now on, these parts will be referred to as components

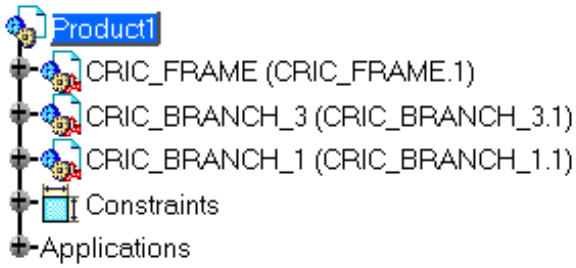

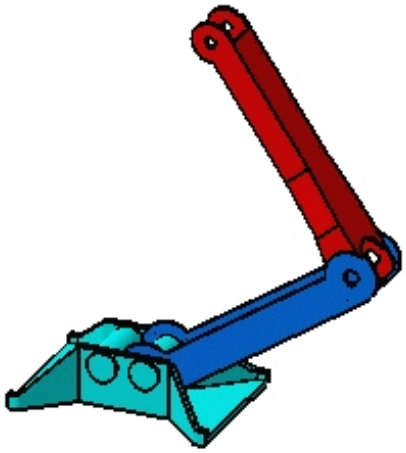

Surface and Coincidence constraints have been defined for these parts in the Assembly workbench.

4. Select **Edit -> Representations -> Design Mode**. This mode lets you access technical data.

5. Click the + sign to the left of the **Constraints** text in the tree and apply the show mode on these constraints if you wish to view them in the geometry area.

Fixing a Component

This task shows you how to set the first constraint. This operation consists in fixing the position of a component in space so as to use this component as the base of the assembly.

1. Select CRIC_FRAME in the specification tree or in the geometry area.

2. Click the **Fix Component** icon in the Constraints toolbar.

   The component **CRIC_FRAME** is immediately fixed. The application indicates this by displaying a green anchor symbol on the component.

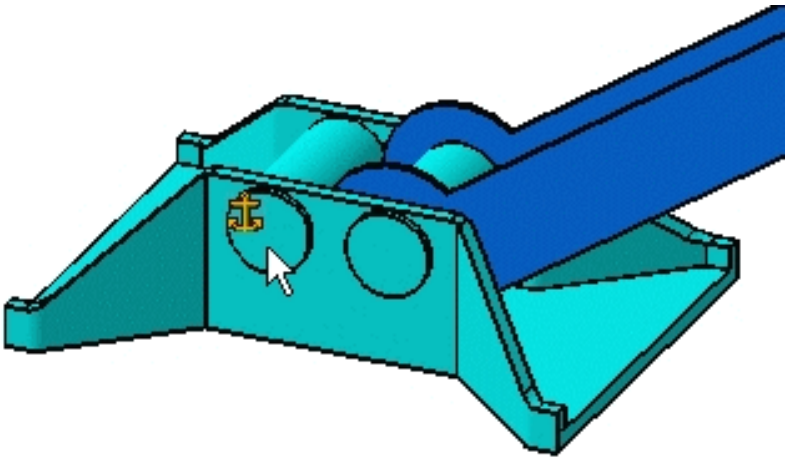

Note also that the Constraints branch now displays the new constraint. The anchor symbol is preceded by a lock symbol, to make a distinction between "fix in space" and "fix operations". For more information, pleaser refer to Fixing a Component.

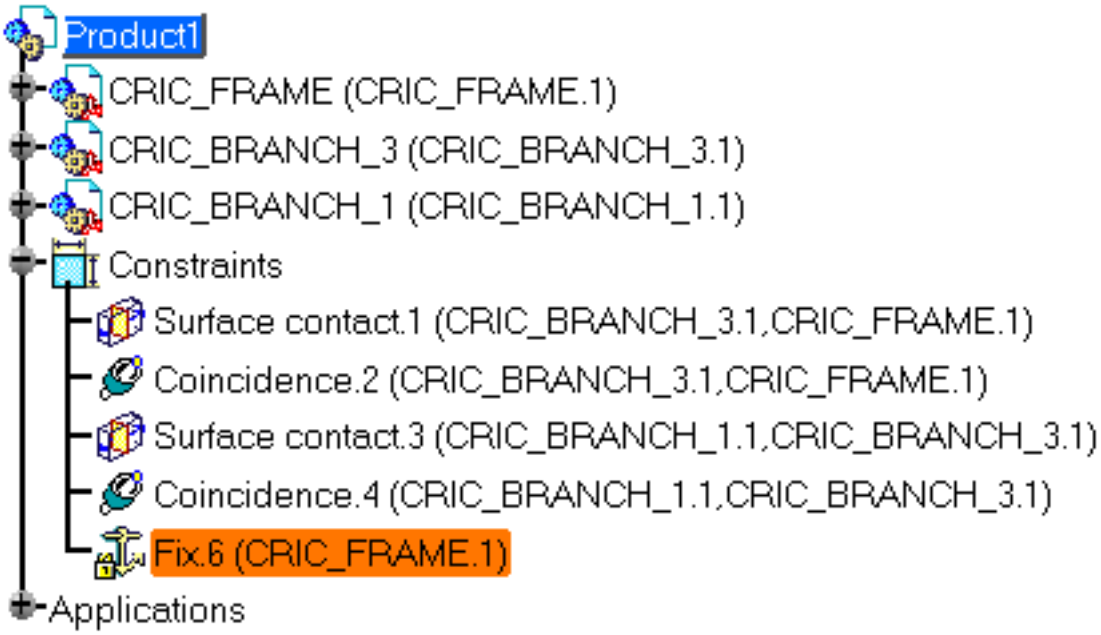
Product1
CRIC_FRAME (CRIC_FRAME.1)
CRIC_BRANCH_3 (CRIC_BRANCH_3.1)
CRIC_BRANCH_1 (CRIC_BRANCH_1.1)
Constraints
Surface contact.1 (CRIC_BRANCH_3.1,CRIC_FRAME.1)
Coincidence.2 (CRIC_BRANCH_3.1,CRIC_FRAME.1)
Surface contact.3 (CRIC_BRANCH_1.1,CRIC_BRANCH_3.1)
Coincidence.4 (CRIC_BRANCH_1.1,CRIC_BRANCH_3.1)
Fix.6 (CRIC_FRAME.1)
Applications

Inserting an Existing Component

This task shows you how to insert an existing component into the assembly.

1. Select **Product1** in the specification tree.

2. Click the **Existing Component** icon in the Product Structure Tools toolbar.

   The File Selection dialog box is displayed.

3. Select **Sub_Product1.CATProduct** from the sample directory.

4. Click Open.

   A new component is added to the specification tree. The assembly now includes four components: three parts and a sub-assembly.

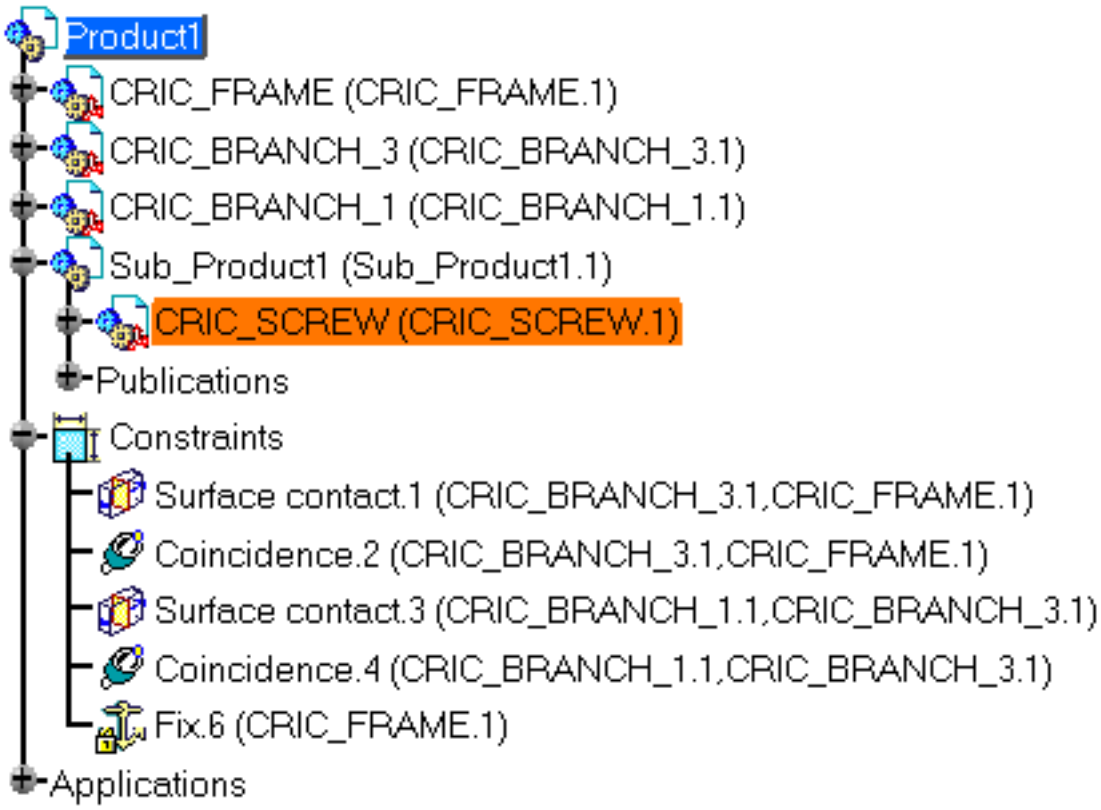

This is the component you have just imported:

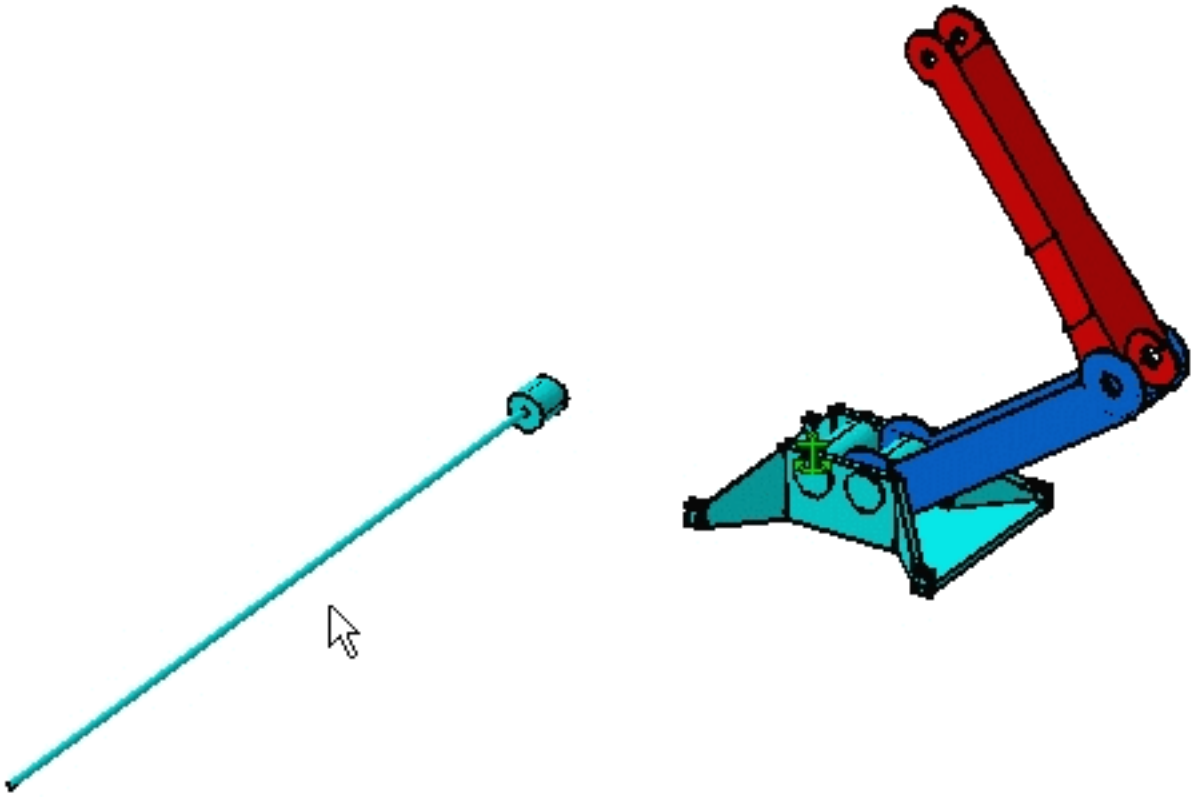

To know the different document types you can insert in a CATProduct document, refer to Product Structure documentation However, to know how to insert .asm documents properly, refer to Opening a .asm Document.

Setting Constraints Between Components

This task consists in setting a coincidence constraint, then a contact constraint between the component you have just inserted (Sub_Product1) and CRIC_BRANCH_1.

1. Click the **Coincidence** icon:

   A message window appears, providing information on the coincidence constraint command. If you do not want to see this dialog box appear any more, check Do not prompt in the future.

2. Select **Axis** publication in the specification tree.

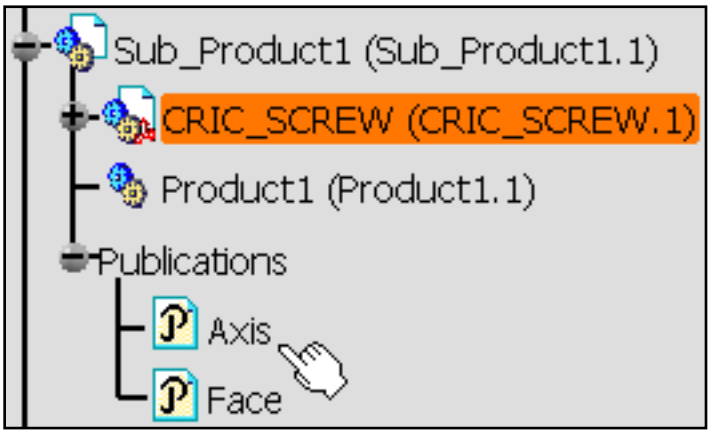

The application detects it once selected. The axis is now highlighted in the geometry.

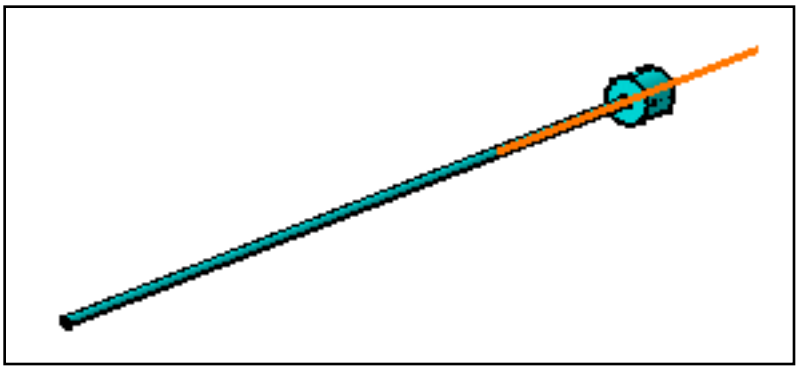

3. Select one of the two inner faces of **CRIC_BRANCH_1** to select the associated axis.

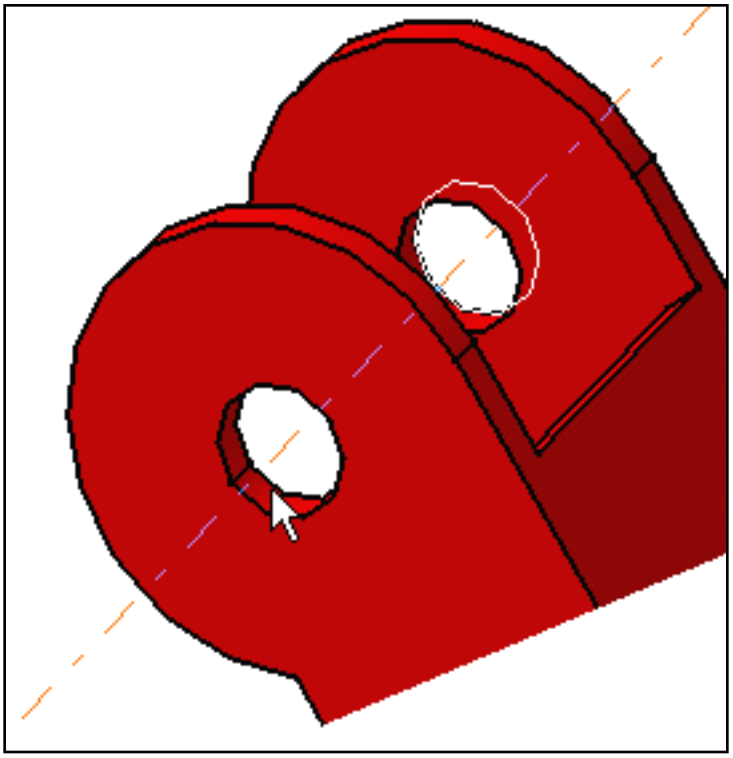

As the coincidence constraint is created, **CRIC_SCREW** and **CRIC_BRANCH_1** are aligned:

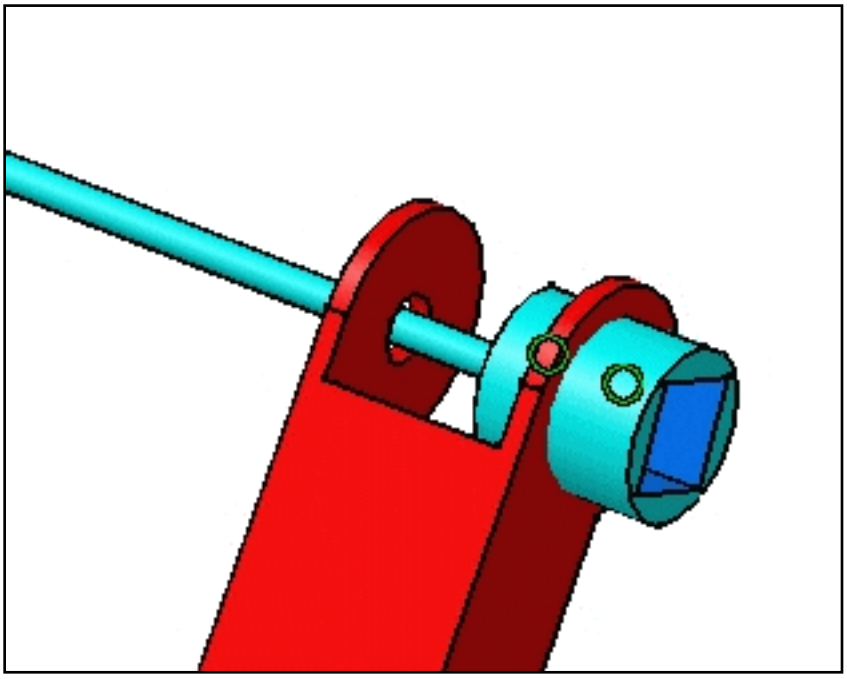

Now, you are going to set a contact constraint between **CRIC_SCREW** and a circular face of **CRIC_BRANCH_1**.

4. Click the **Contact Constraint** icon:

5. Select **Face** publication in the specification tree.

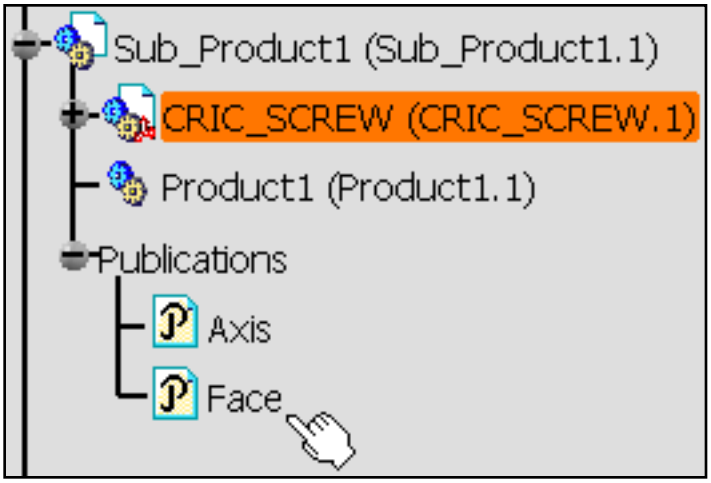

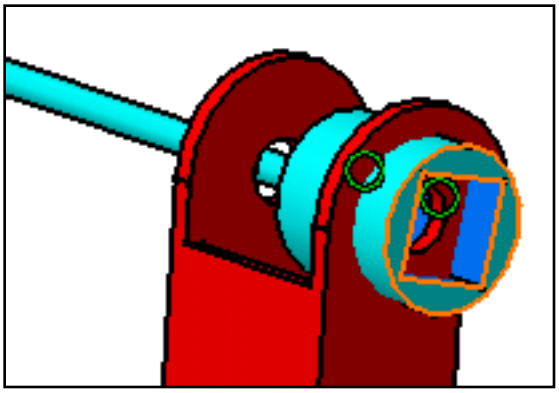

6. Select the red circular face in the direction opposite to the published face.

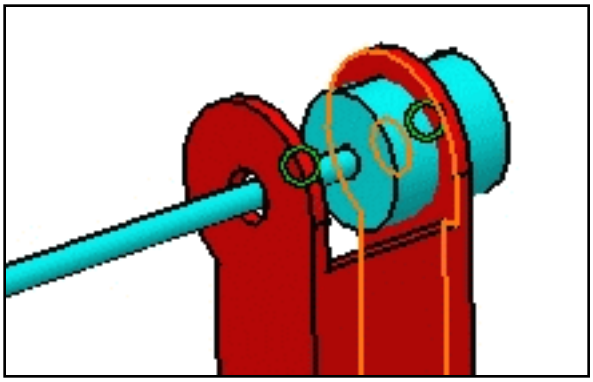

As the contact constraint is created, the turquoise cylinder is located exactly on the red face.

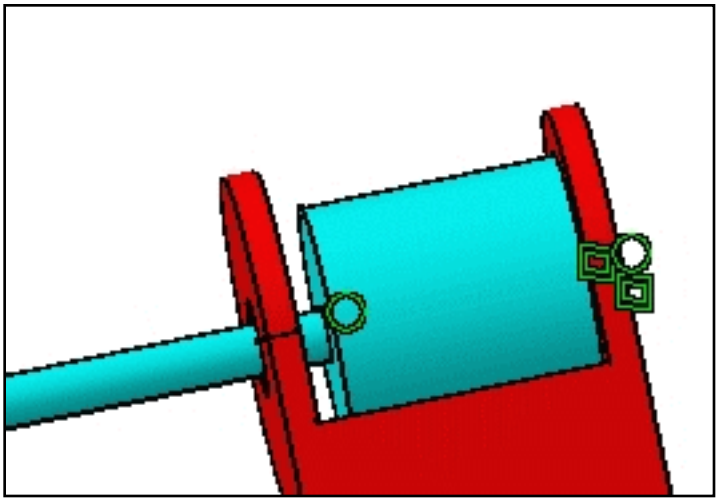

The created constraints are automatically updated because the automatic update mode is activated. As the color defining valid constraints is green, our constraints are green. The application allows you to customize constraint colors as explained in Customizing Constraint Appearance.

The assembly now looks like this:

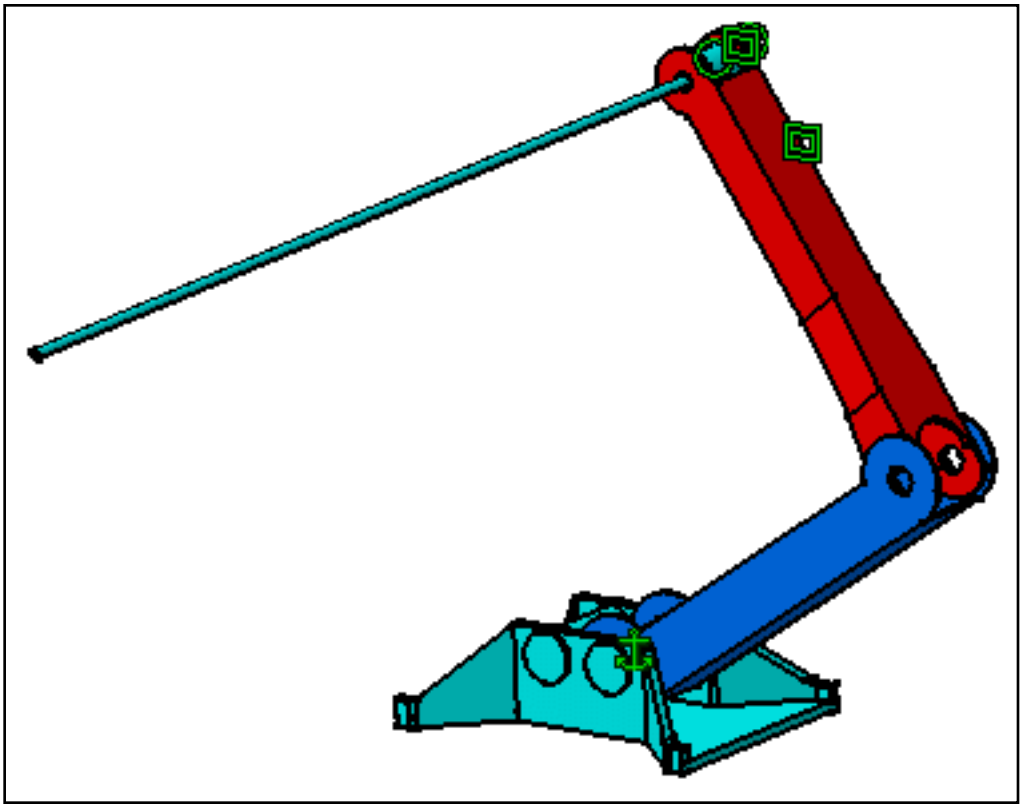

Moving Constrained Components Using the Compass

This task consists in manipulating the assembly to check if the components react the way we want, i.e. according to the constraints we set in the previous task.

1. Select the red patch at the center of the compass and drag it onto **CRIC_SCREW**. For details about how to use the compass, please refer to *Infrastructure User's Guide*.

   As the compass is snapped to the component, you can manipulate the component.

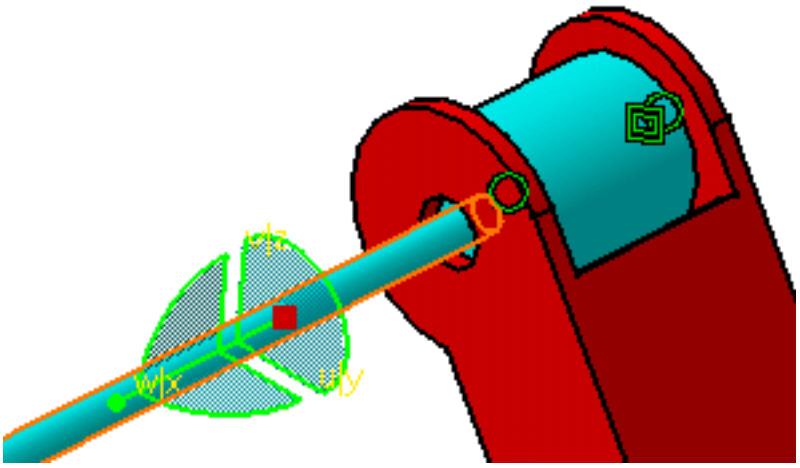

2. Now, if you press and hold down the Shift key, select v/z axis on the compass, then drag and drop the component up and down, you can see that three components are moving.

   This is an example of what we can get:

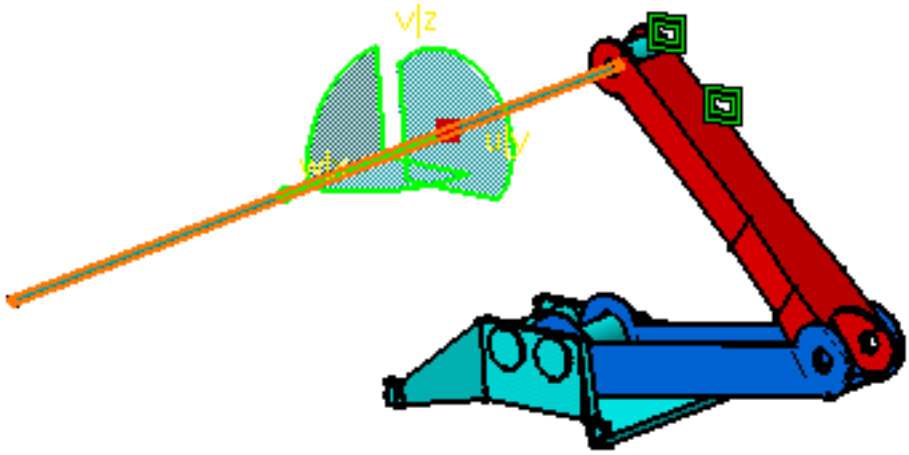

3. Repeat the operation as many times as you wish.

   The assembly reacts correctly. CRIC_FRAME does not move because it is fixed. The other three components can move.

4. Release the left mouse button before releasing the Shift key.

5. Drag the compass away from the selected object and drop it.

Adding and Renaming a New Component

This task consists in adding a new component to the assembly. You will then rename this component. This component is a part created in the Part Design workbench.

1. Click **Product1** and select the **Part** icon in the Product Structure Tools toolbar.

   The New Part: Origin Point dialog box appears, presenting two possible options: Either you define the point of your choice to locate the new part, or you use the origin point of the assembly as the origin point to be used for the part.

2. Click No to use the origin point of the assembly.

   The new component "**Part5 (Part5.1)**" is now displayed in the specification tree:

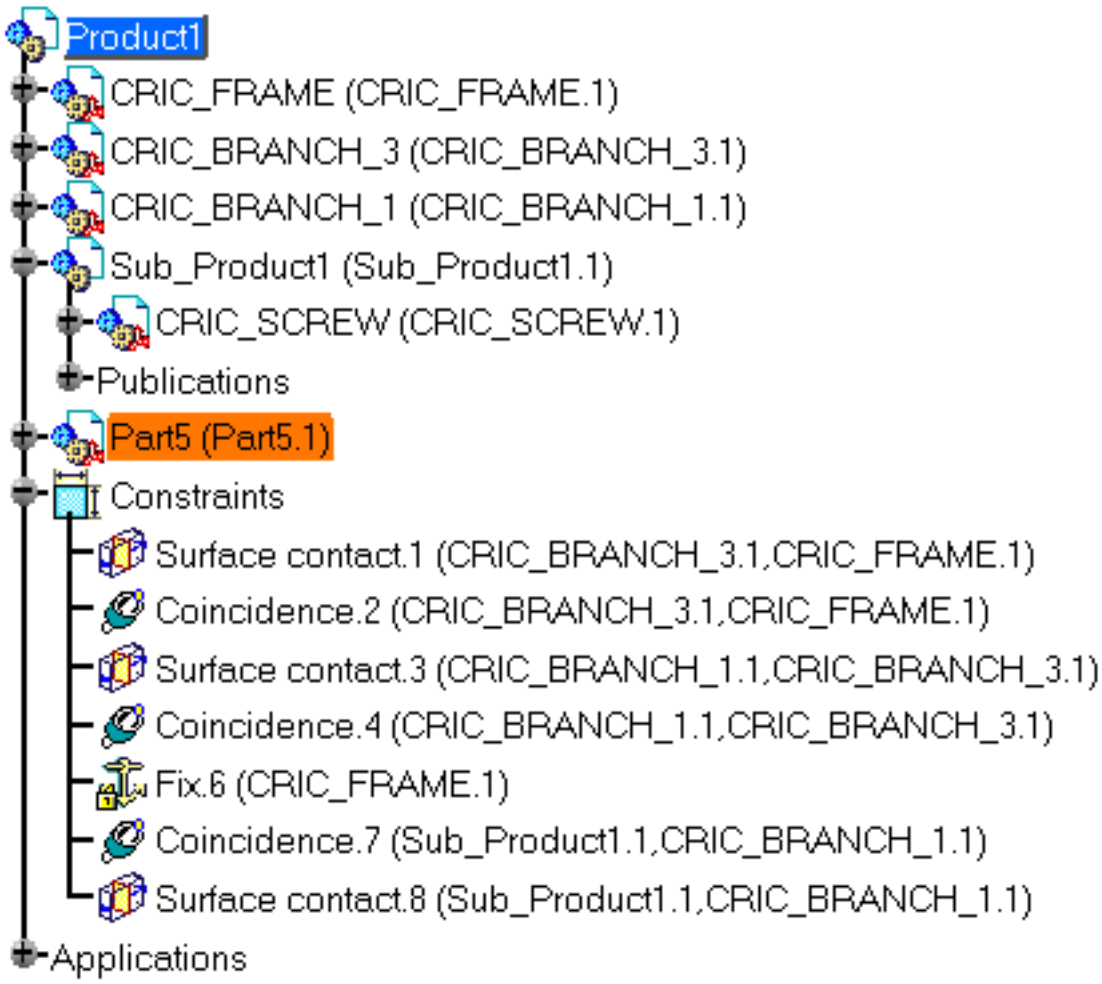

If the Manual Input option is activated (see Customizing Product Structure Settings), the Part Number dialog box appears before the New Part: Origin Point dialog box and lets you enter the name of your choice.

3. Right-click **Part5 (Part5.1)** and select the **Properties...** contextual command.

4. In the Properties dialog box that appears.

The options available in the Product tab let you enter the information you required.

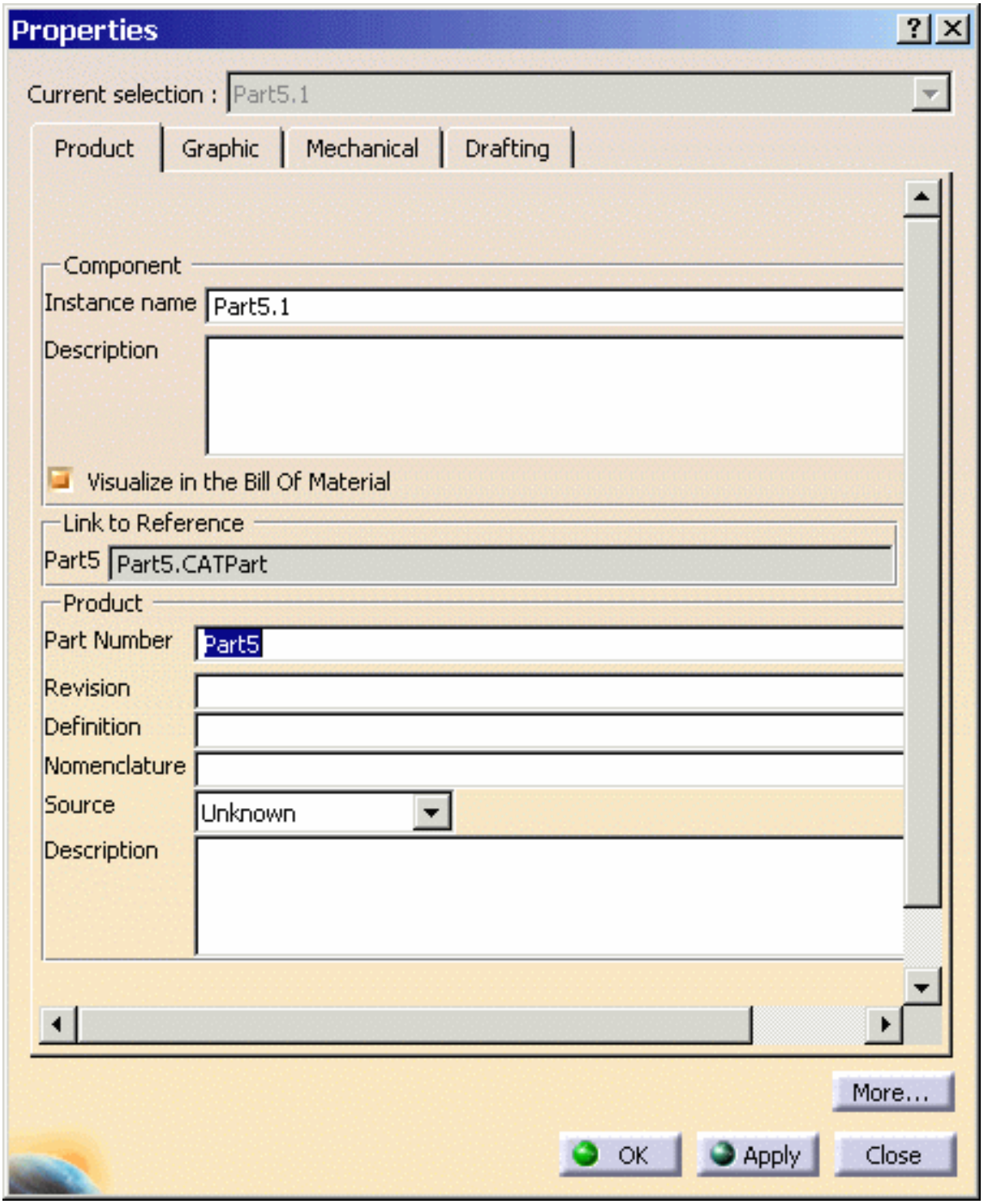

5. Enter CRIC_JOIN.1 in the Instance name field and CRIC_JOIN in the Part Number field.

6. Click OK to validate the operation.

   The new names are now displayed in the specification tree:

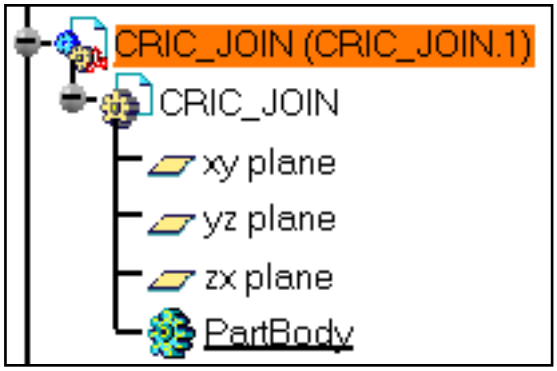

Designing a Part in an Assembly Context

This task consists in designing the part you have just added to the assembly. It shows you how easy it is to access the tools required for designing components in an assembly context.

1. Double-click **CRIC_JOIN** in the specification tree to access the Part Design workbench.

2. Select the blue face as shown and click the **Sketcher** icon to access the Sketcher workbench.

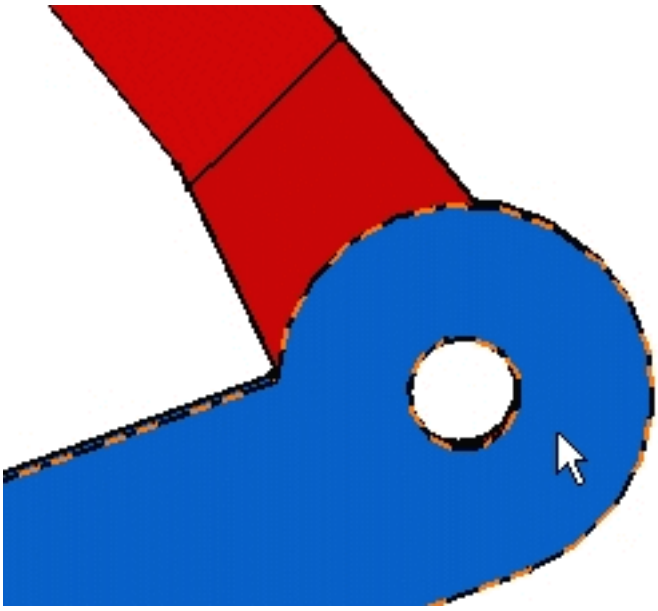

3. Now that you are in the Sketcher, click the **Normal View** icon in the View toolbar and sketch a circle on the face using the **Circle** command.

   Do not bother about positioning the circle.

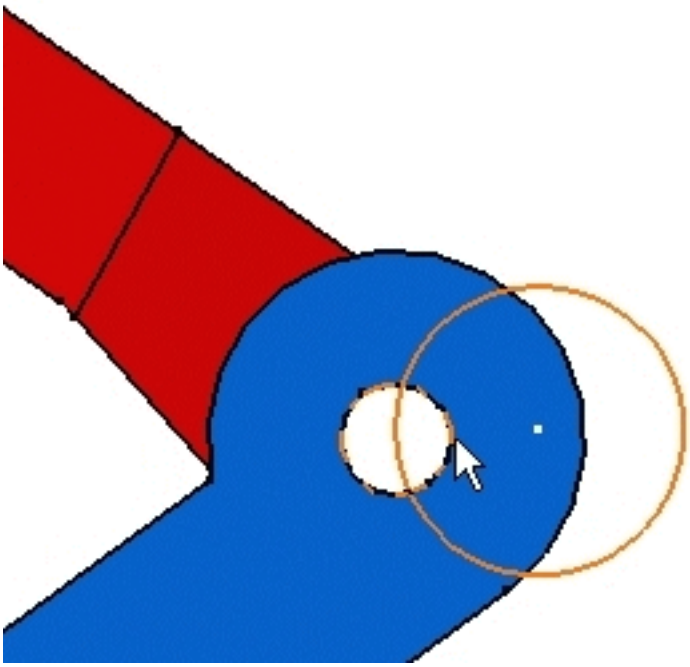

4. Now to obtain the same radius value as the one used for CRIC_JOIN circular edge and to make sure that this circular edge and the circle share the same axis, use the **Constraints Defined in Dialog Box** command to create a coincidence constraint (select the circle -if not already done- and the circular edge, then click the **Constraint Defined in Dialog Box** command and check "Coincidence").

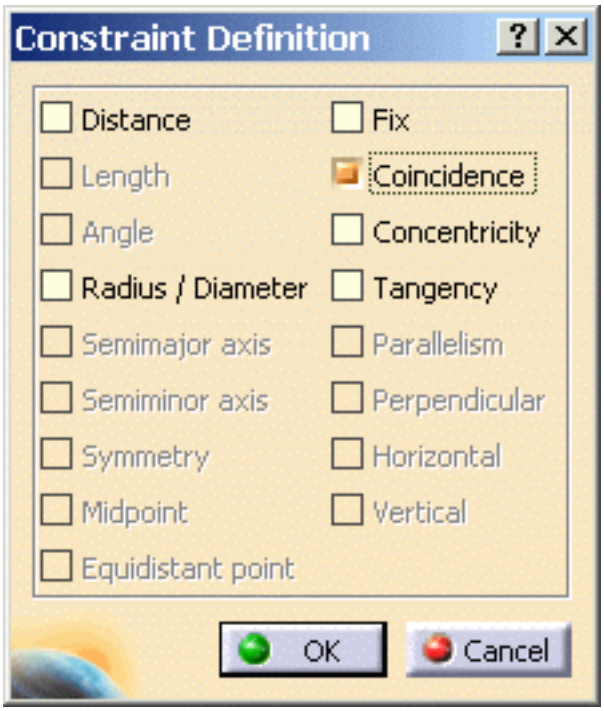

After validating the operation, the circle is coincident with the circular edge. You must obtain this:

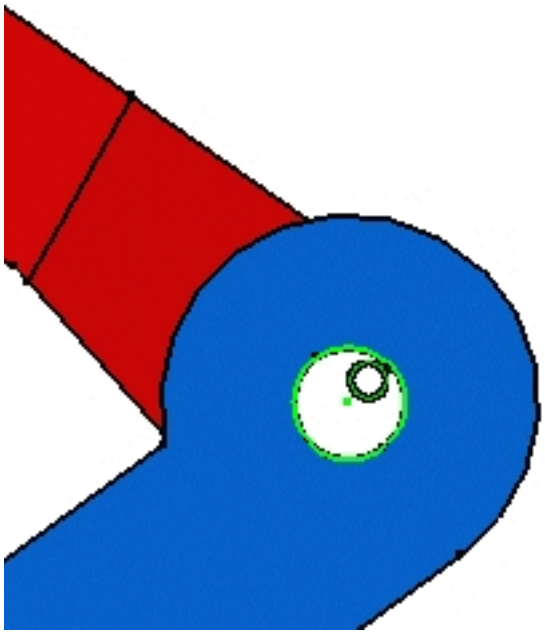

5. Exit the Sketcher and use the **Pad** command with the "Up to Plane" option to extrude the sketched circle. Select the blue face as shown to specify the limit of the pad.

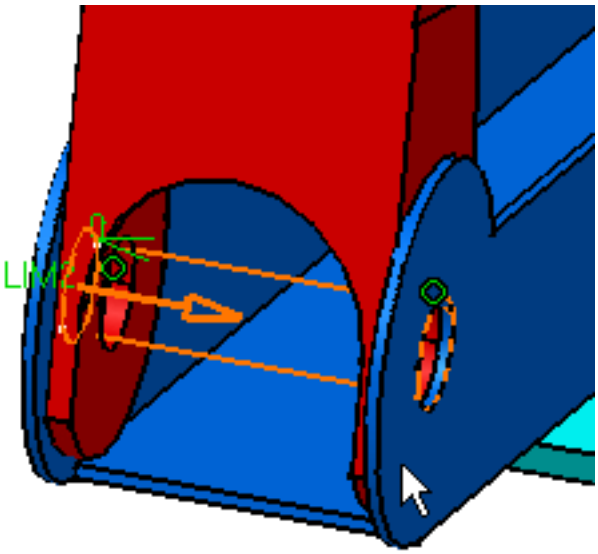

After validating the operation, you should obtain this cylinder:

The part is designed.

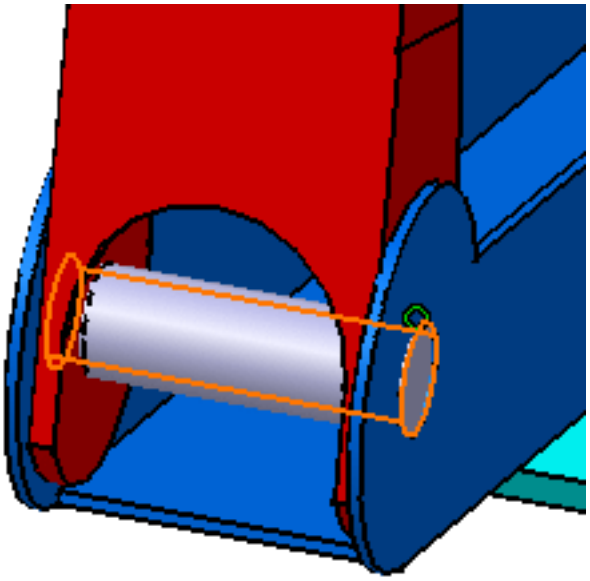

For information about Part Design and designing in context, refer to **Part Design** User's Guide and Designing in Assembly Context respectively.

Editing a Parameter

In this task, you are going to edit the diameter of the pocket belonging to CRIC_BRANCH_3. You will see how this edition affects the part you created in the previous task.

1. Double-click CRIC_BRANCH_3 to access the Part Design workbench.

2. Select Pocket.2 and use the Pocket.2 object -> Edit Parameters contextual command to display the associated parameters.

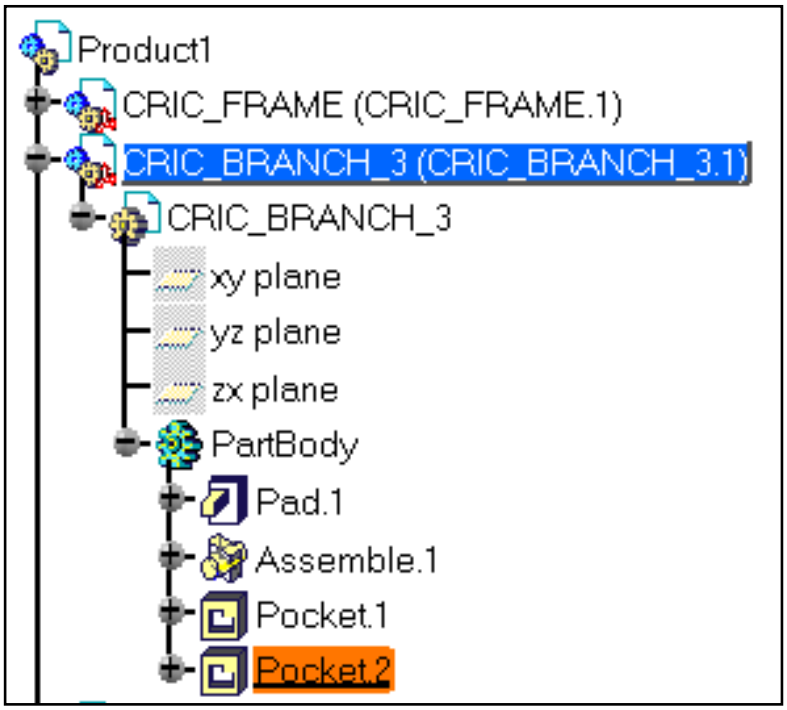

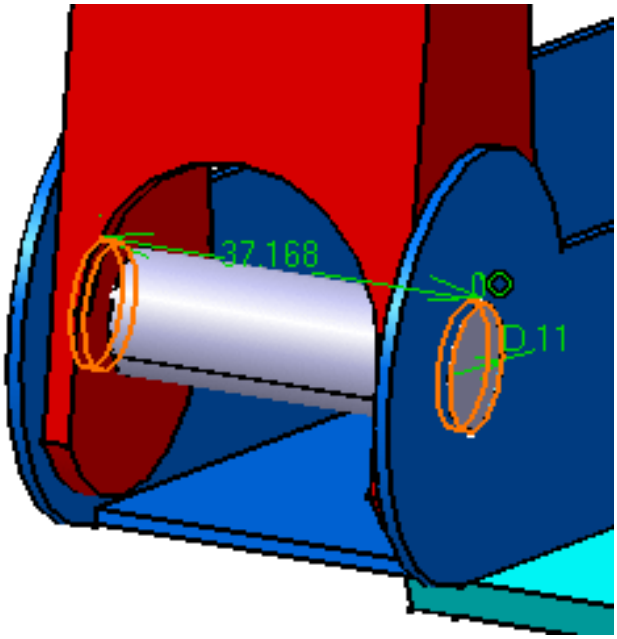

3. Double-click D11 in the geometry area to display the Constraint Edition dialog box.

4. Enter 20 as the new diameter value and click OK to generate the new pocket.

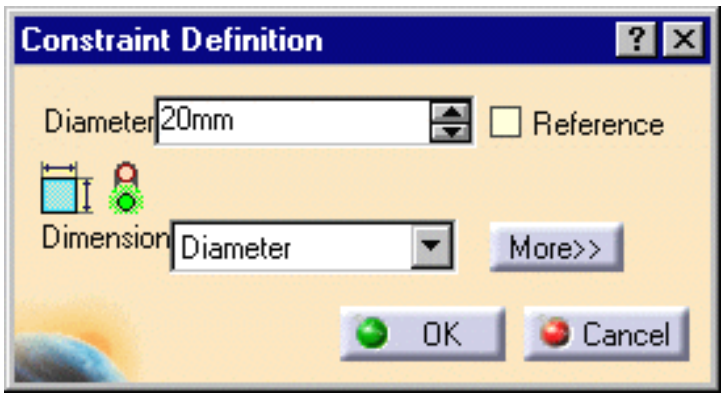

5. Update Product1 by double-clicking on **Product1** in the specification tree.

The pocket is modified accordingly. The coincidence previously set between the two parts is maintained.

This result is made possible thanks to the option Keep link with selected Object you set at the very beginning of the scenario.

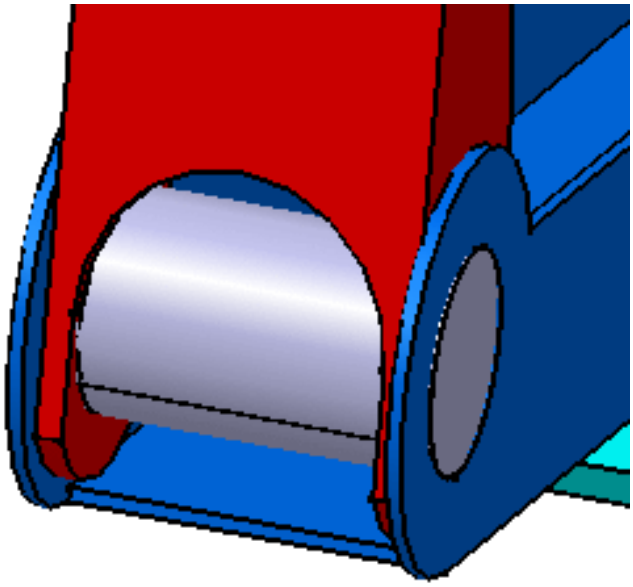

Replacing a Component

This task shows you how to replace Sub_Product1.CATProduct by another component.

1. Select Sub_Product1.CATProduct in the specification tree.

2. Click the **Replace Component** icon in the Product Structure Tools toolbar.

3. In the dialog box that appears, select **Sub_Product2.CATProduct** as the replacement component and click Open.

   The Impacts on Replace dialog box is displayed:

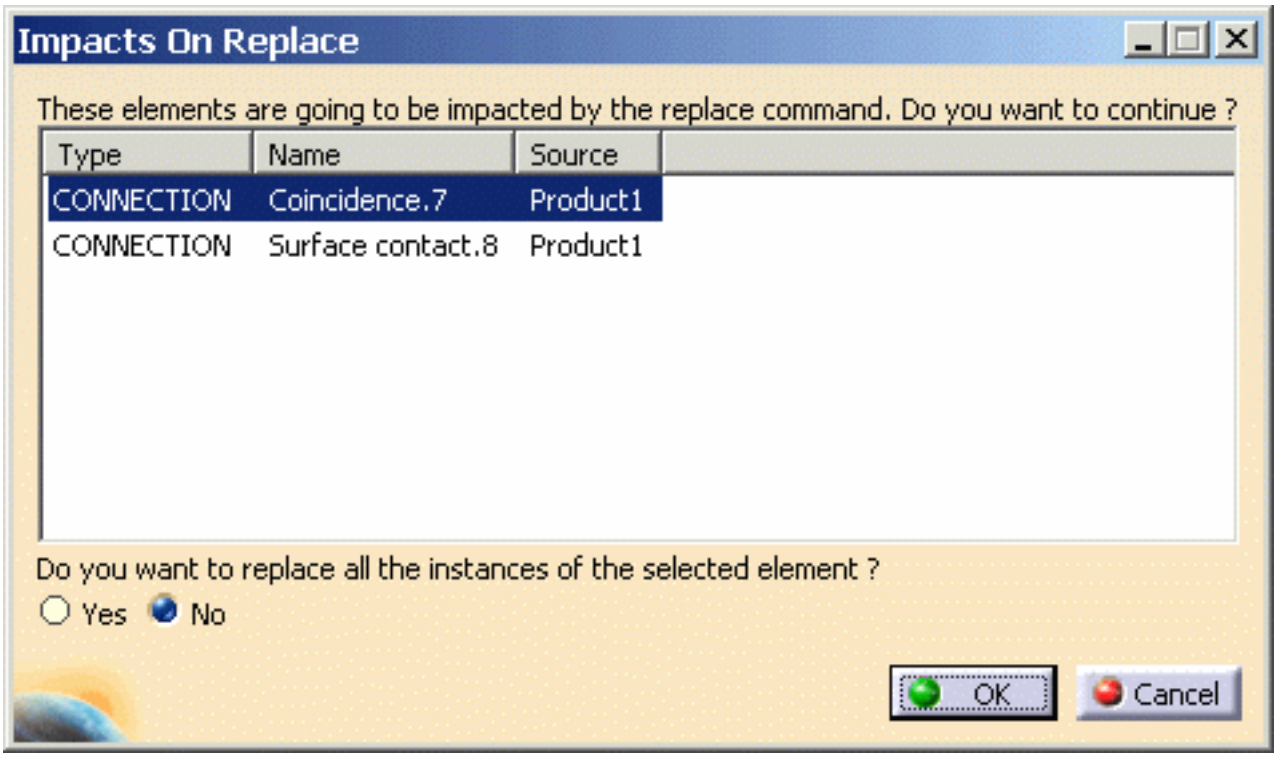

4. Check Yes to replace all instances of the selected element and click OK to confirm.

   Sub_Product1.CATProduct is no longer visible. This is Sub_Product2.CATProduct:

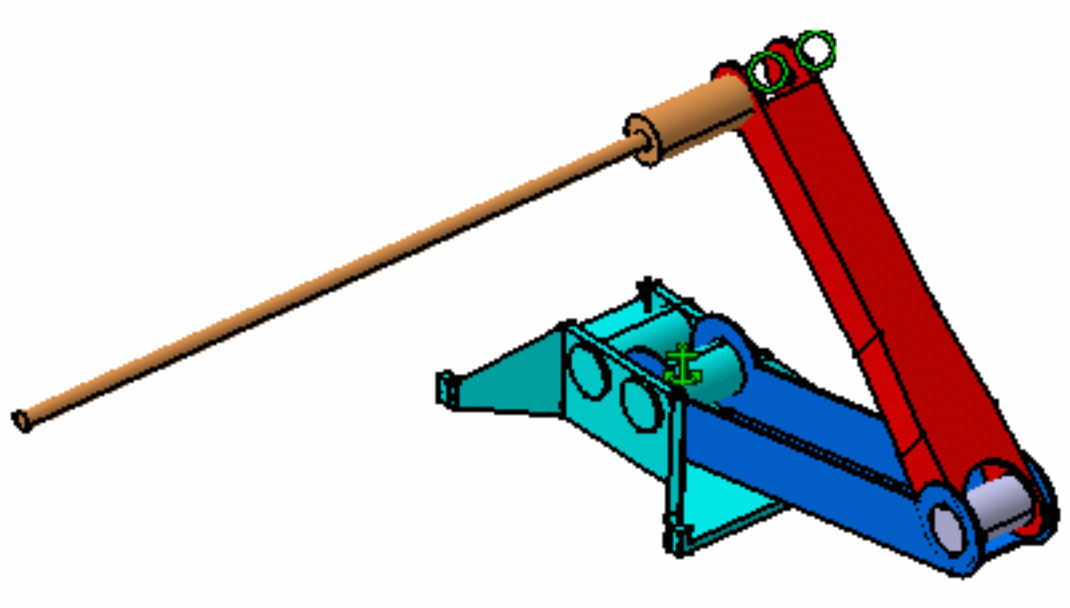

If necessary update the document.

Note that the coincidence constraint is maintained. This is due to the publication of the axis used in the constraint definition. As the axis is a published element, the application can reconnect the constraint.

Conversely, the contact constraint is broken. You will know how to reconnect it later.

Analyzing Assembly Constraints

This task shows you how to analyze the status of all assembly constraints defined for Product1.

1. Select the Analyze -> Constraints... command.

   The Constraints Analysis dialog box that appears displays all the information you need. The Constraints tab contains a detailed status of the assembly: the number of non-constrained components and the status of the defined constraints.

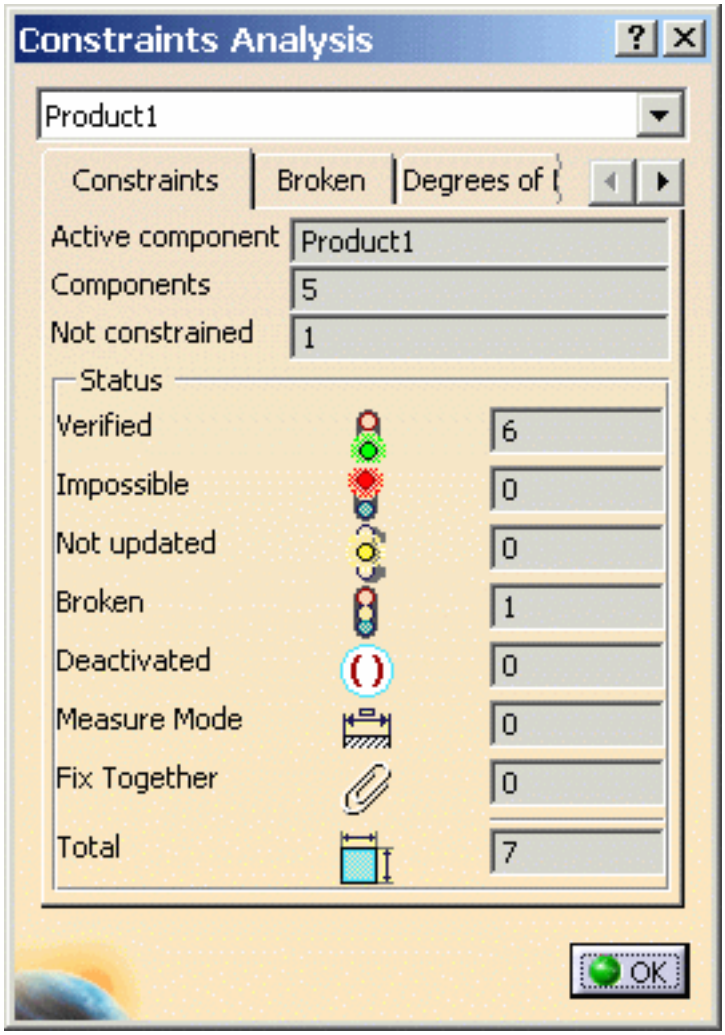

2. Click the Broken tab to see the list of broken constraints. We have only one broken constraint, a contact constraint.

3. Click on the name of the constraint.

   The constraint is highlighted in the specification tree.

4. Click on OK to close the dialog box.

   Reconnecting this contact constraint is our next task.

Reconnecting a Broken Constraint

In this task, you will learn how to reconnect the broken constraint detected by the application.

1. Double-click the broken constraint in the specification tree. Note that this broken constraint is indicated by a yellow warning symbol.

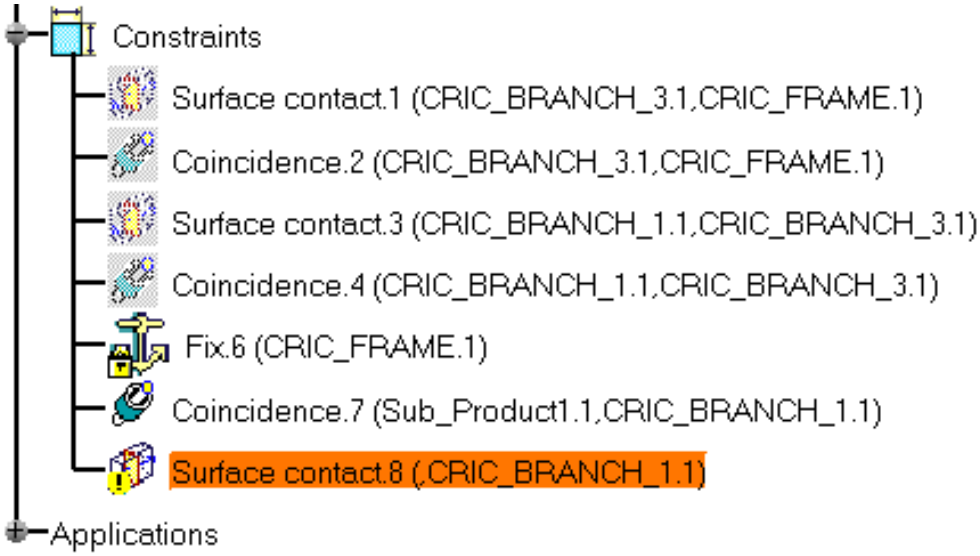

2. In the Constraint Definition dialog box that appears, click More to access additional information.

3. Click Disconnected in the Status frame, then Reconnect...

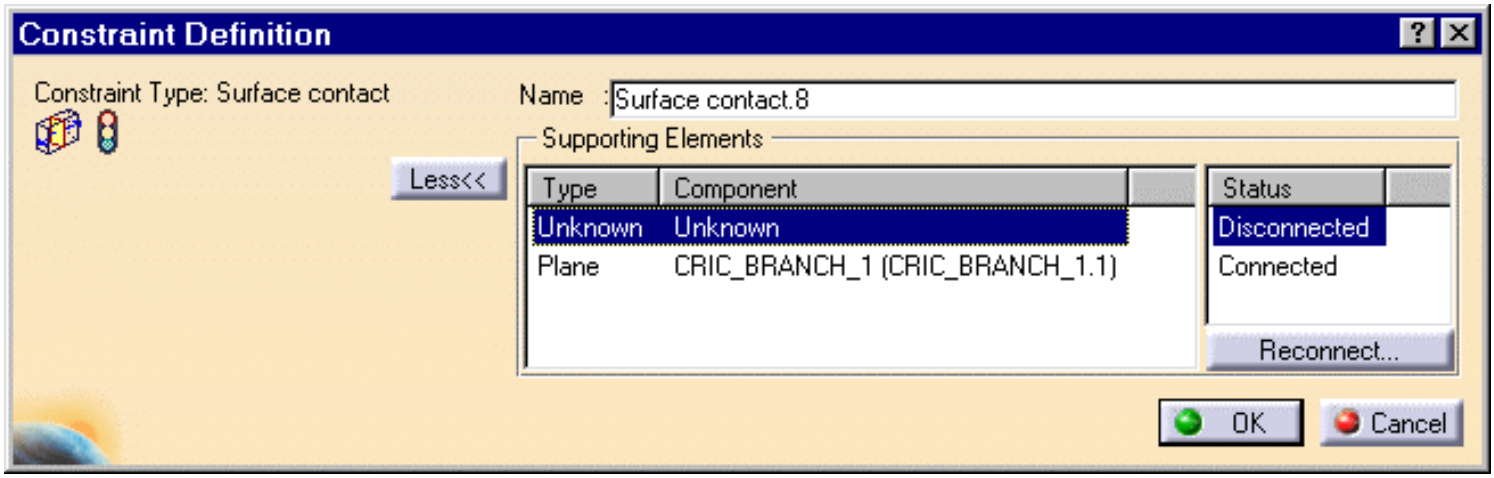

4. You are then prompted to select a component to rebuild the constraint. Select the same faces as the ones used for setting the first contact constraint. If you need some help, refer to Setting Constraints Between Components.

5. Click OK to validate the operation and update the document.

The constraint is reconnected:

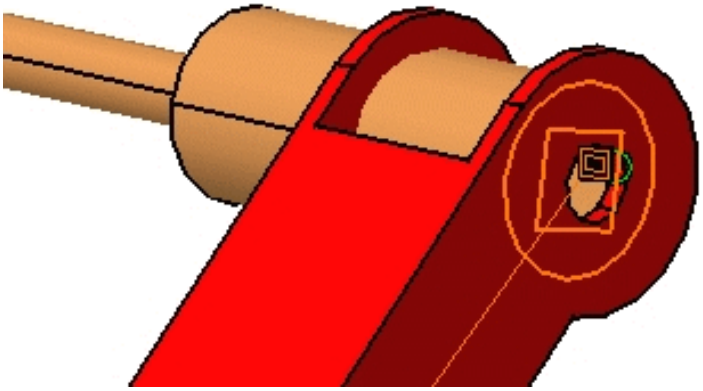

Detecting Clashes

In this task, you will learn how to detect possible clashes between two components.

1. Select **CRIC_BRANCH_1.1** in the specification tree.

   Select the **Analyze -> Compute Clash...** command.

2. The Clash Detection dialog box appears. It displays the first component selected for computing possible clashes.

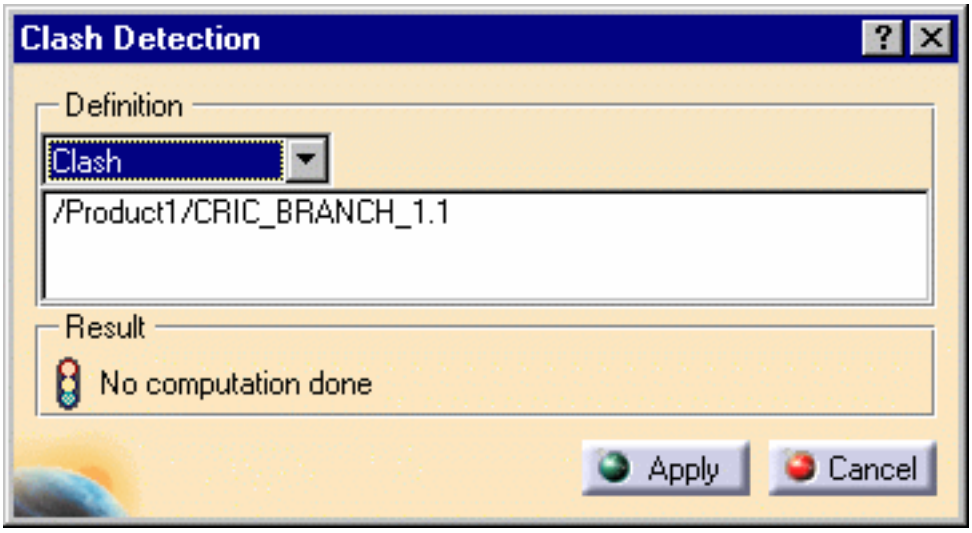

3. As you need another component, select **SUB_PRODUCT2** using the Ctrl key.

   This component also appears in the dialog box.

4. Click Apply to compute clashes.

   The application detects a clash between the brown cylinder and the red face. This is indicated by two red circles in the geometry, as the arrow shows in the figure below:

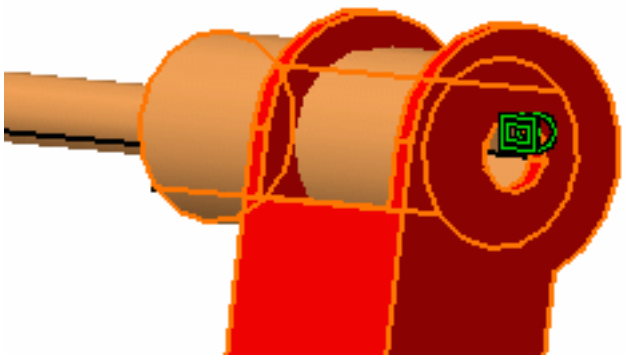

The result of the computation also appears in the dialog box.

5. Click Cancel to close the dialog box.

Well, now that you know that your assembly needs to be modified to work properly, let's edit the cylinder.

Editing a Component

This task shows you how to edit the component causing the problem.

1. Double-click the brown cylinder to access the Part Design workbench.

2. Double-click the cylinder again to edit it. The Pad definition dialog box is displayed.

3. Enter 20mm to reduce the pad length and click OK.

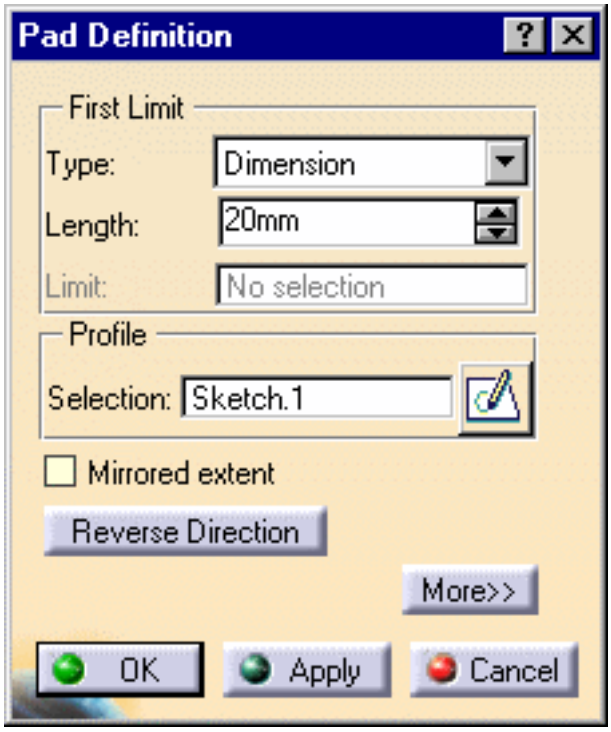

4. The cylinder is updated and now looks like this:

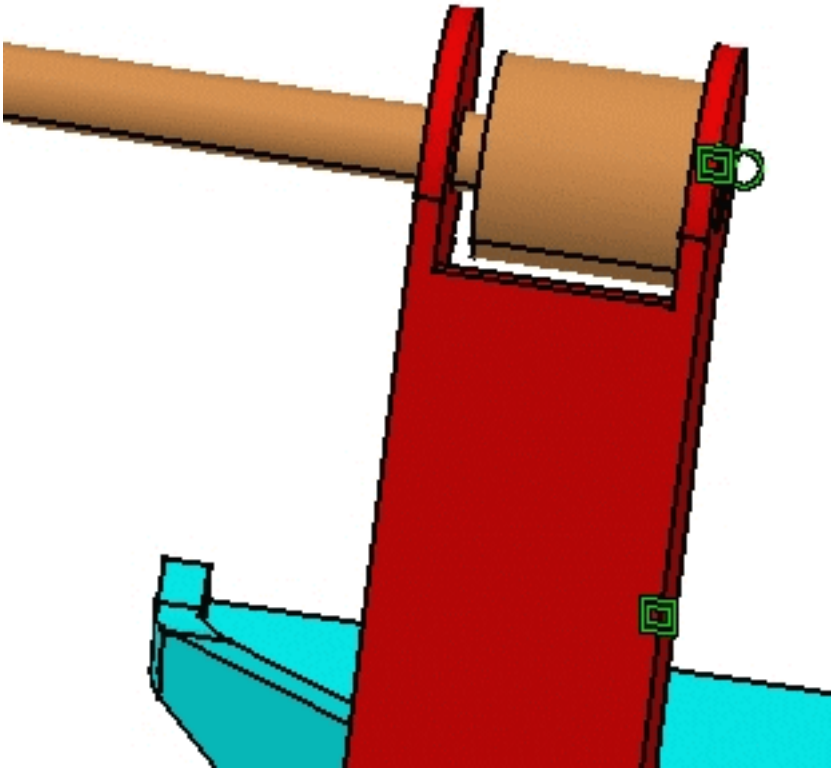

Displaying the Bill of Material

This task shows you how to access all the information available about the structure of the assembly.

1. Return to Assembly Design workbench and select the **Analyze -> Bill of Material...** command.

   The Bill of Material is displayed.

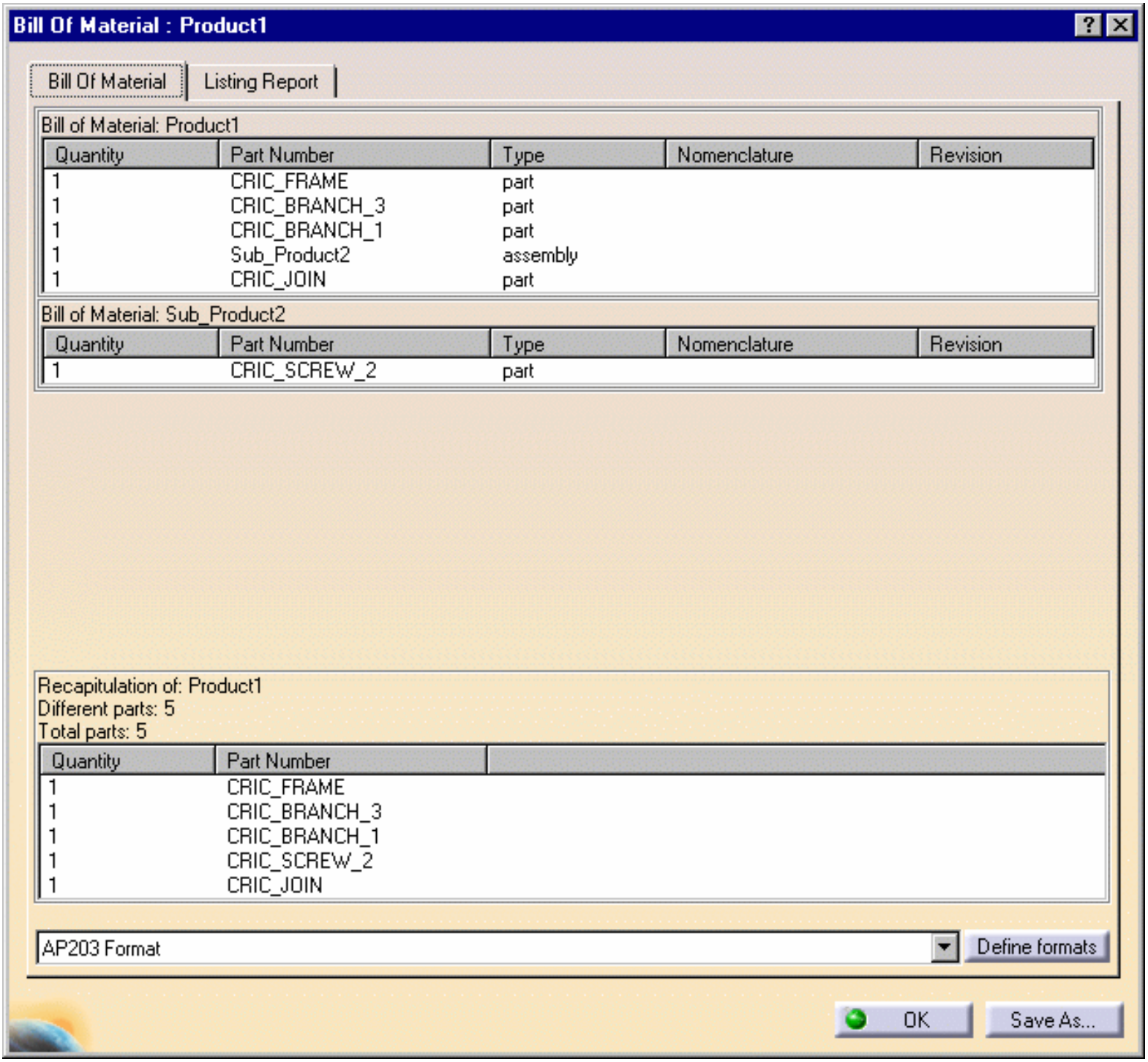

It is composed of these sections:

Bill of Material: lists all parts and sub-products one after the other
Recapitulation: displays the total number of parts used in the product
Define formats: customizes the display of the bill of material

The Listing Report tab displays the tree of the product using indents

2. If you wish, you can save this document using the html format or the txt format. Just click the Save As... button, then give a name and the appropriate extension to your file.

For more information about the bill of material, refer to Displaying the Bill of Material.

Exploding the Assembly

This last task illustrates the use of the Explode capability. Exploding the view of an assembly means separating the components of this assembly to see their relationships.

1. Make sure **Product 1** is selected.

2. Click the **Explode** icon in the Move toolbar.

   The Explode dialog box is displayed.

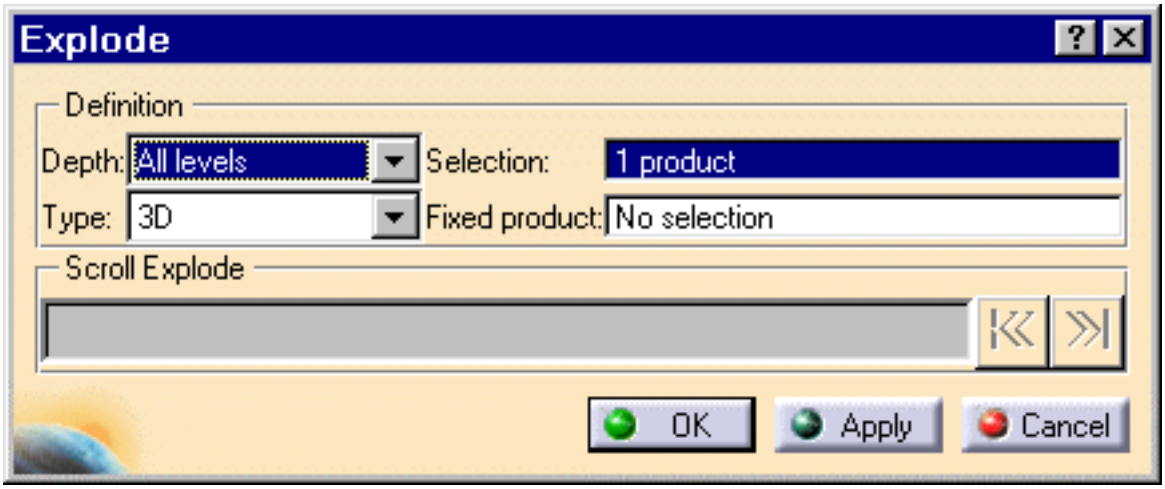

   Product 1 is the assembly to be exploded. The Depth parameter lets you choose between a total (All levels) or partial (First level) exploded view.

3. Set All levels if not already set.

4. Set 3D to define the explode type.

5. Click Apply to perform the operation.

   The Scroll Explode field gradually displays the progress of the operation. The application assigns directions and distance.

   Once complete, the assembly looks like this:

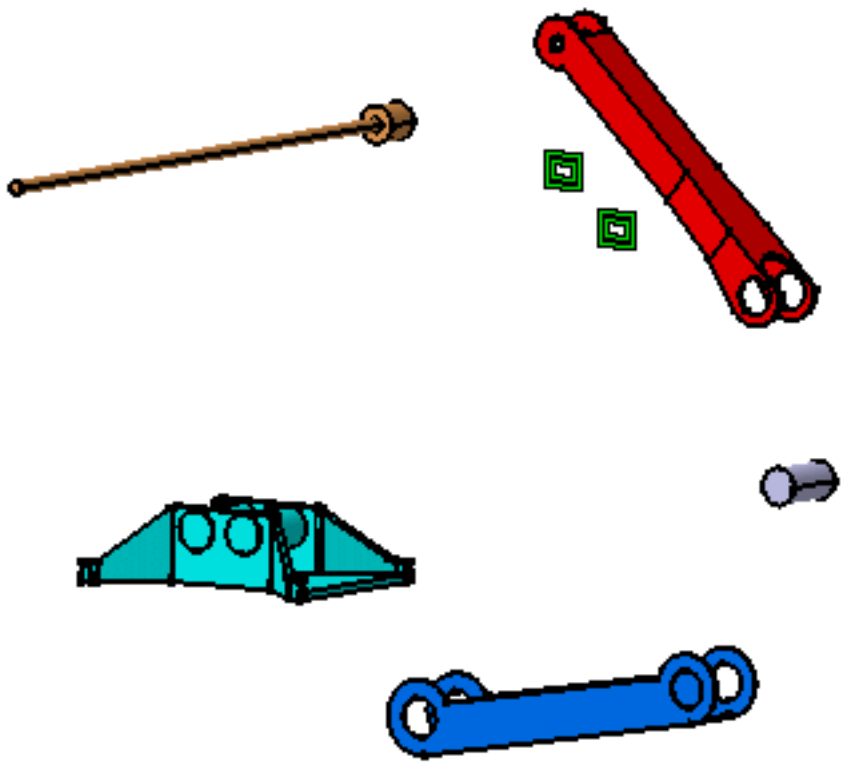

The usefulness of this operation lies in the ability of viewing all components separately.

Note that you can move products within the exploded view using the 3D compass.

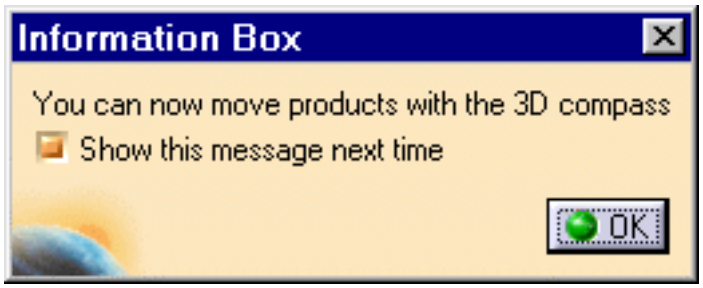

6. Click OK to validate the operation and then click Yes at the prompt or click Cancel to restore the original view.

Well, you have done all the tasks of the Getting Started section. Why not consult the rest of the documentation?

User Tasks

Here is the list of the tasks you will perform in this section:

Creating an Assembly Document
Updating an Assembly
Analyzing an Assembly
Defining a Multi-Instantiation
Fast Multi-Instantiation
Inserting an Existing Component with Positioning
Managing Constraints
Moving Components
Using Assembly Tools
Creating Annotations
Detecting Clashes
Sectioning
Measuring Minimum Distances
Improving Performances
Generating CATPart from Product
Displaying the Assembly Mass Properties
Modifying an Assembly
Editing a CATPart in an Assembly Design Context
Assembly Features
Assembly Symmetry
Flexible Sub-Assemblies
Reusing a Part Design Pattern
Managing Part and Assembly Templates
Managing Enhanced Scenes
Selecting Using a Filter

Creating an Assembly Document

This task will show you how to enter the **Assembly Design** workbench to create a new assembly from scratch.

1. Select the **Start -> Mechanical Design -> Assembly Design** command to launch the required workbench.

The **Assembly Design** workbench is opened. You can see that **Product1** is displayed in the specification tree, indicating the building block of the assembly to be created. To create an assembly, you need products. The application uses the term **product** or **component** to indicate assemblies or parts. You can use parts to create products. Those products can in turn be used to create other products.

The commands for assembling different products (or components) are available in the toolbar **Product Structure Tools** to the right of the application window. For information on these commands, please refer to **Product Structure** user's guide.

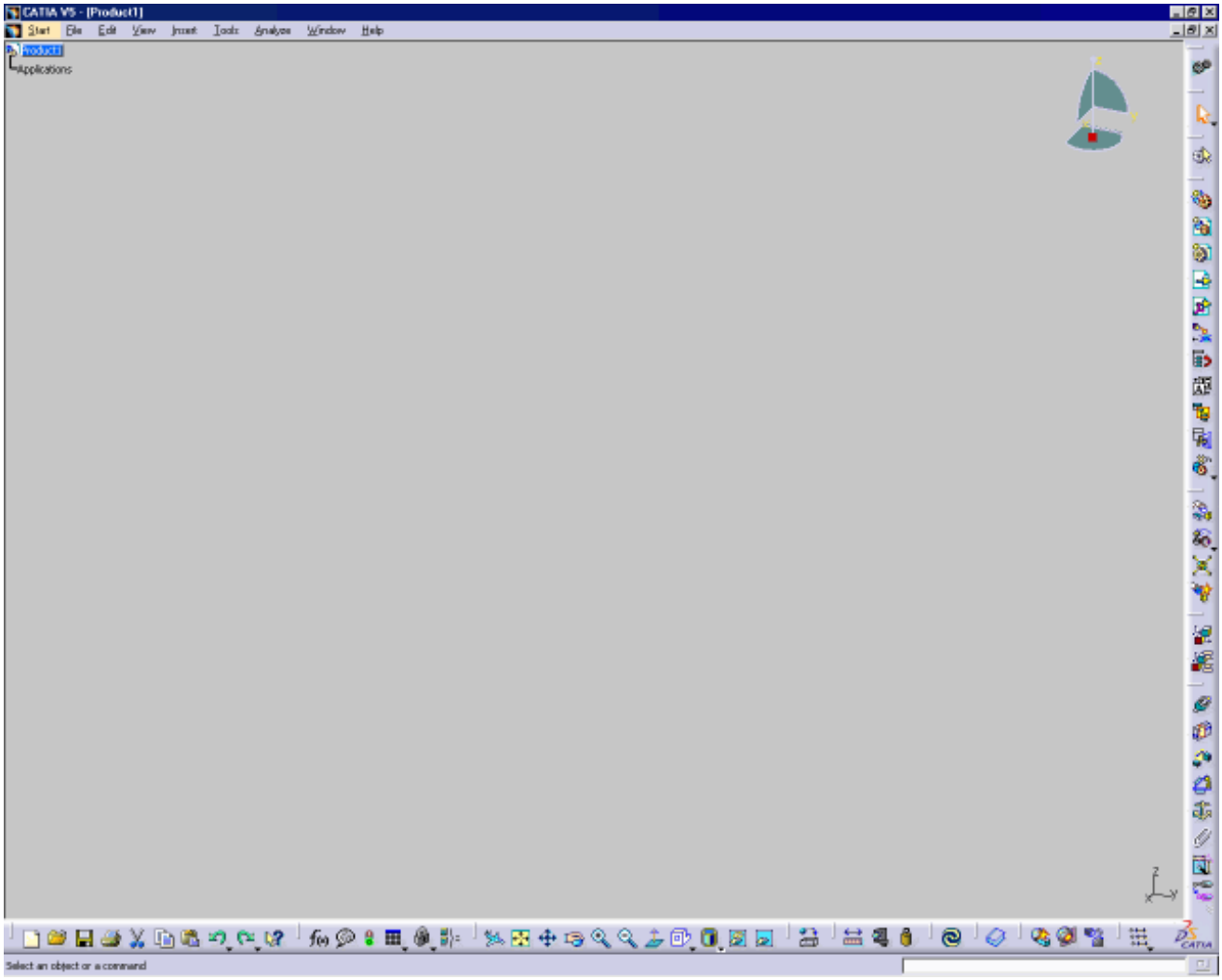

The document contains:

- a specification tree to the left of the application window
- specific toolbars to the right of the application window
- a number of contextual commands available in the specification tree and in the geometry. Note that these commands can also be accessed from the menu bar.

Updating an Assembly

This task will show you how to update an assembly.

- Updating an assembly means updating all elements affected by this functionality, see Assembly Update reference information.
- You can update automatically or not your assembly, see **Assembly Design-Update** option.
- You can define the update propagation in the assembly, see **Assembly Design-Update propagation** option.
- You can compute the update status when you open an assembly document or insert an assembly component, see **Assembly Design-Compute exact update status at open** option.

When you are opening an assembly document or inserting a component:

- In **Design Mode**, the update status can be determined, the **Update All** icon or the **Updated** icon is displayed.
- In **Visualization Mode**: the update status cannot be determined, the **Status Unknown** icon is displayed. When you click this icon, the minimal data needed to determine the update status are loaded:
  - If the minimal data loaded to determine the status allow the application to perform an update and if the **Update** option is **Automatic**, then the assembly is updated, the **Updated** icon is displayed.
  - If the status is not up to date, the **Update All** icon is displayed. When you click this icon, the needed data to perform the update are loaded, then the assembly is updated, the **Updated** icon is displayed.

To perform this task you must work in **Visualization Mode**, select the **Tools->Options...** command.
In the **Infrastructure** category, select the **Product Structure** sub-category then the **Cache Management** tab and check the option **Work with the cache system**. Close and re-open the application if needed.

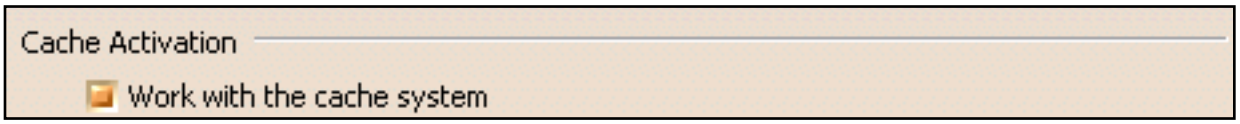

Open the Assembly_01.CATProduct document.

The **Update Status Unknown** icon is displayed because there is not enough information to determine the update status of assembly's elements: the constraints reference assembly components which are in **Visualization Mode**.

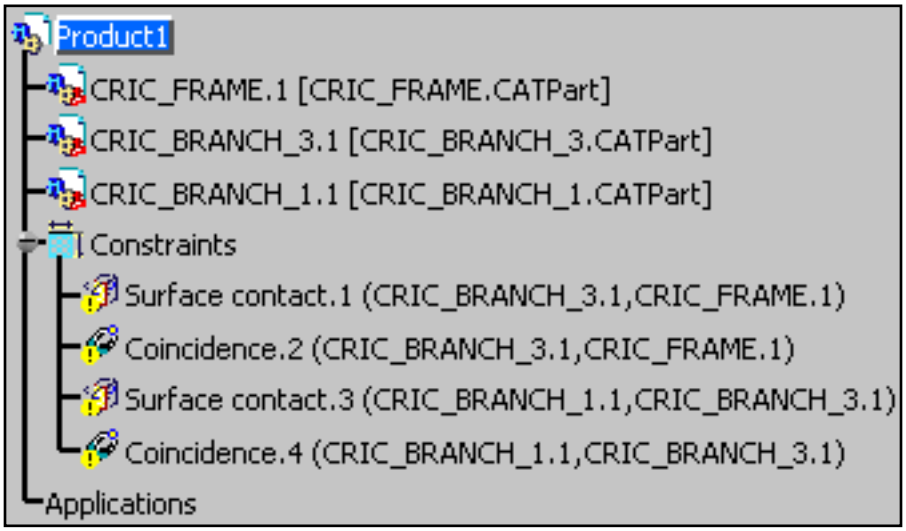

You can keep this state and work or determine the update status. In our example, we want to determine it.

1. Click the **Update Status Unknown** icon:

When you click this icon, the application loads the minimal data to determine the update status. This is mean that the constraints' related components may be switched to **Design Mode**, warning is displayed in this case.

The **Update Warning** dialog box appears, you can:

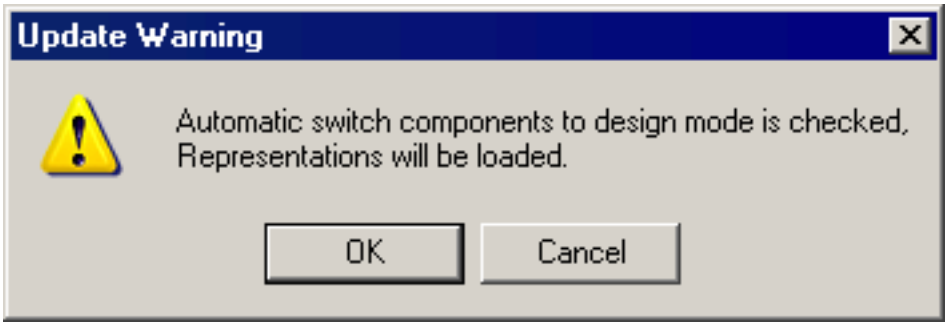

- Click **OK** to determine the update status.
- Click **Cancel** to keep the unknown status.

2. Click **OK**, a progress bar appears during the data loading.

The update status has been determined: the assembly is up to date and the **Updated** icon is displayed:

The components have been loaded and constraints have been resolved.

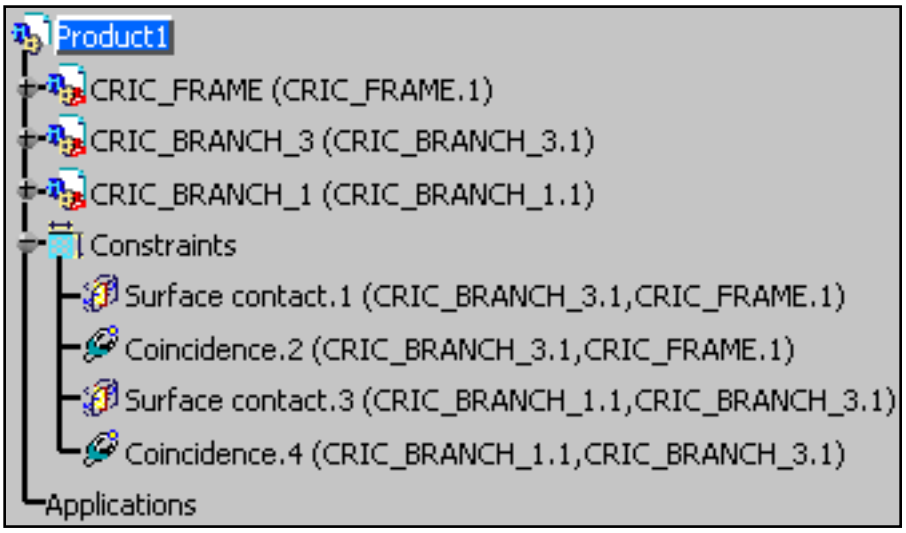

Analyzing an Assembly

Compute a Clash: Select **Analyze -> Compute Clash,** multiselect the components and click Apply.

Compute a Clearance: Select **Analyze -> Compute Clash,** multiselect the components, enter the clearance value and click OK.

Analyze Constraints: Select **Analyze -> Constraints**, and select the constraints in the dialog box.

Analyze Dependences: Select the component and the **Analyze -> Dependency...**command, check the display options of the dialog box or select elements and use the different contextual commands.

Analyze Updates: Select the product or component of interest and select the Analyze -> Update command.

Analyze Degrees of Freedom: Select the Analyze -> Degrees of Freedom command.

Computing a Clash Between Components

As assemblies may be very complex and are made up of a large number of components, you may find it difficult to see possible clashes. This task shows you how to analyze clashes or compute clearance between components.

Open the AnalyzingAssembly01.CATProduct document.

1. Select **Analyze -> Compute Clash**...

   The Clash Detection dialog box is displayed. It lets you compute possible clashes or clearance. The default option is Clash.

2. Multiselect the components CRIC_FRAME1 and CRIC_BRANCH_3.

   The components are displayed in the Compute Clash dialog box.

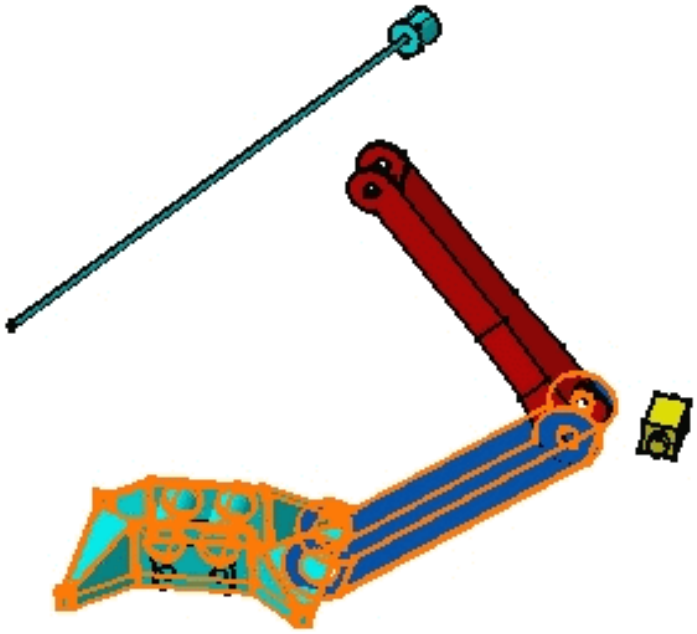

3. Click Apply to compute a possible clash.

   The icon in the Result frame now flashes red indicating that an interference has been detected.

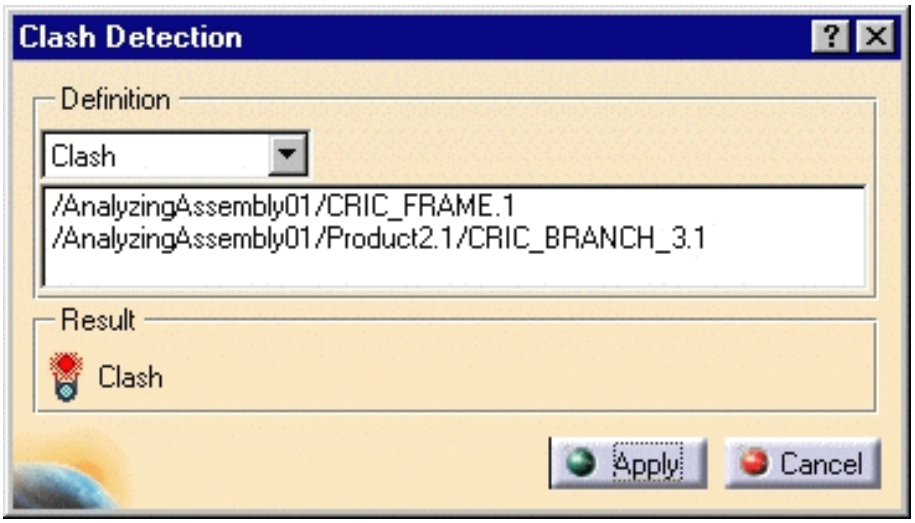

The application detects a clash between the components. This result is shown by two red areas as the arrow shows in the figure opposite:

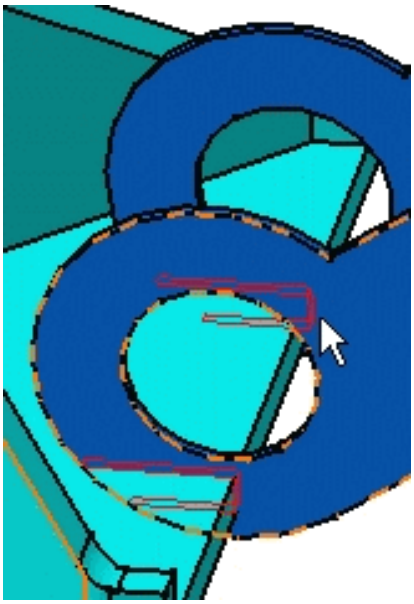

4. Click Cancel.
5. Repeat the operation to compute a possible clash between **CRIC_BRANCH1 and CRIC_BRANCH_3.**

The application detects a contact between the components. The icon in the Result frame now shows yellow indicating this.

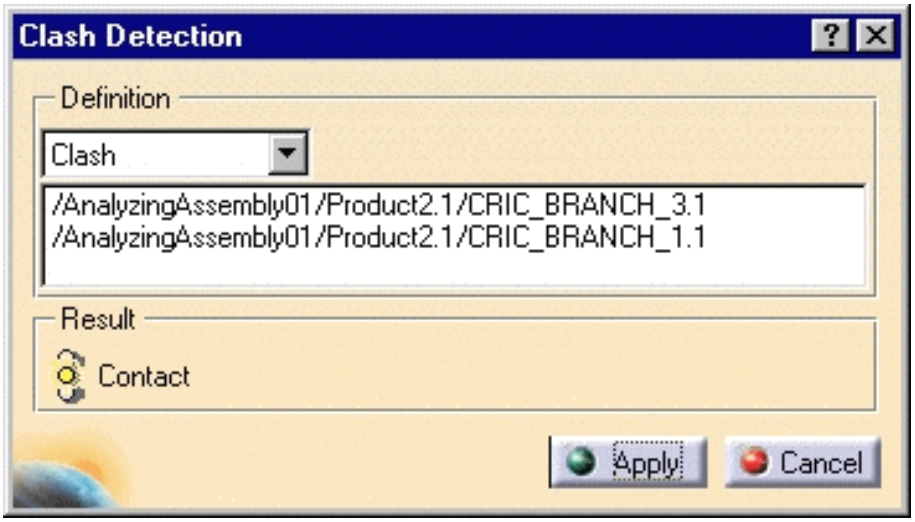

6. Click Cancel to exit.

7. Repeat the operation to compute a possible clash between CRIC_JOIN1 **and** CRIC_BRANCH_1.1.

   The icon in the Result frame now shows green indicating that no interference has been detected.

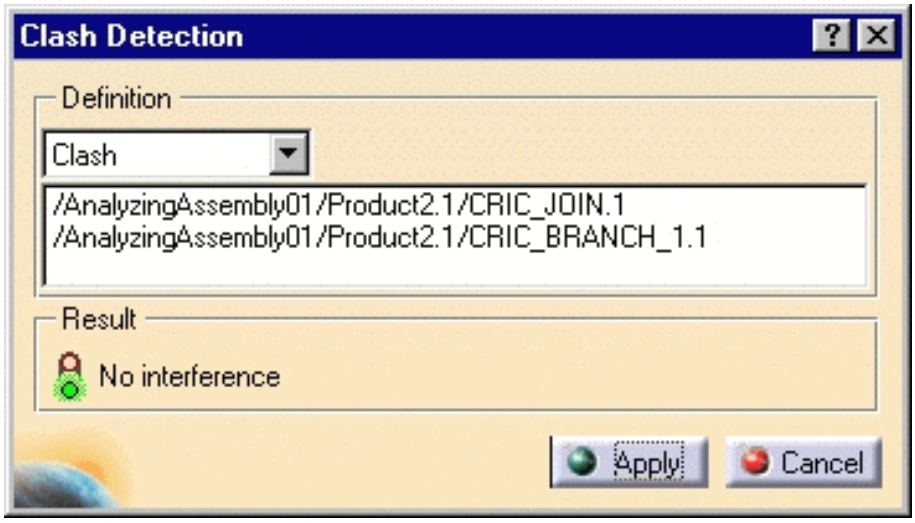
Clash Detection
Definition
Clash
/AnalyzingAssembly01/Product2.1/CRIC_JOIN.1
/AnalyzingAssembly01/Product2.1/CRIC_BRANCH_1.1
Result
No interference
Apply
Cancel

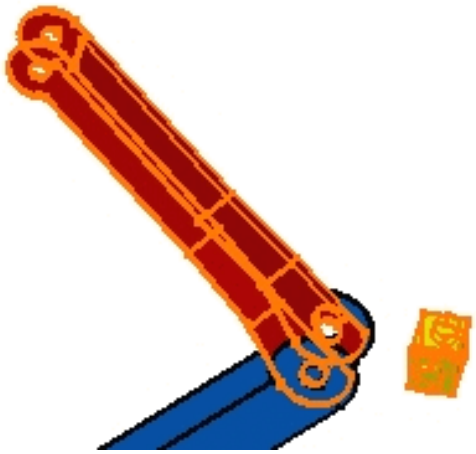

Computing a Clearance Between Components

Once components have been added or constrained, you may need to analyze the clash or compute the clearance between components. This task shows you how to compute the clearance between two components of an assembly.

Open the AnalyzingAssembly01.CATProduct document.

1. Select **Analyze -> Compute Clash...**

   The Clash Detection dialog box is displayed.

2. Select **Clearance** in the combo box.

   The Clash Detection dialog box displays a field where you specify the clearance value.

3. Enter the clearance value: 50 mm.

4. Click the first component: CRIC_JOIN.1.

5. Control-click the second component: CRIC_BRANCH_3.1.

   The components are displayed in the Clash Detection dialog box.

6. Click Apply to compute possible clearance.

   The application detects a clearance violation. The distance between the components is less than 50 mm. The status icon is yellow in the dialog box.

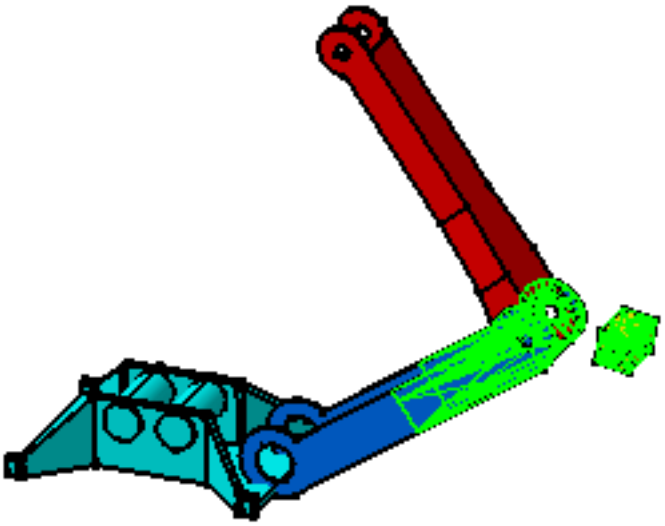

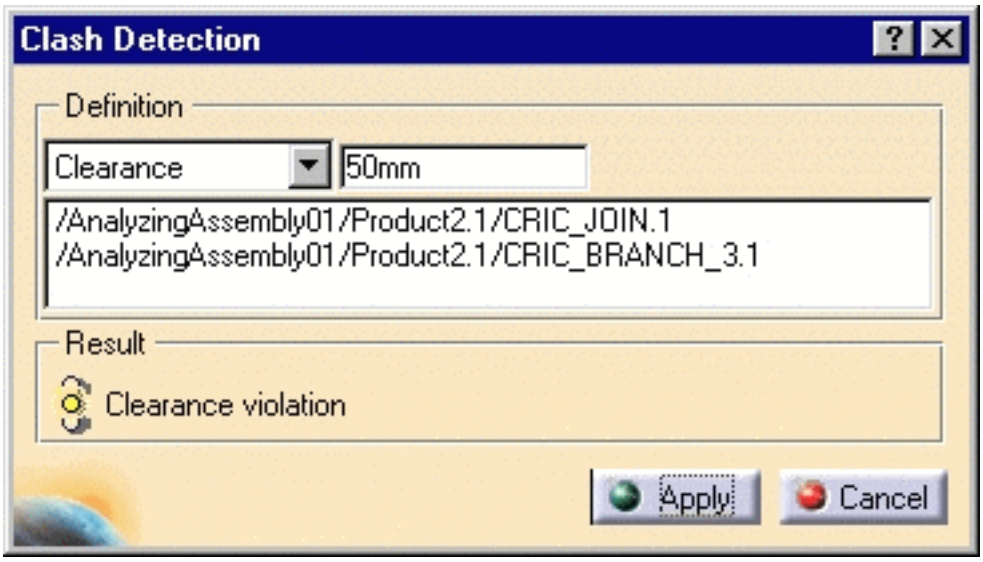

7. Click Cancel to perform another operation.

8. Now multiselect CRIC_BRANCH_3 and CRIC_BRANCH_1.

9. Repeat steps from 1 to 3.

10. Click Apply.

    The application detects a contact between the components. The status icon in the dialog box has turned yellow.

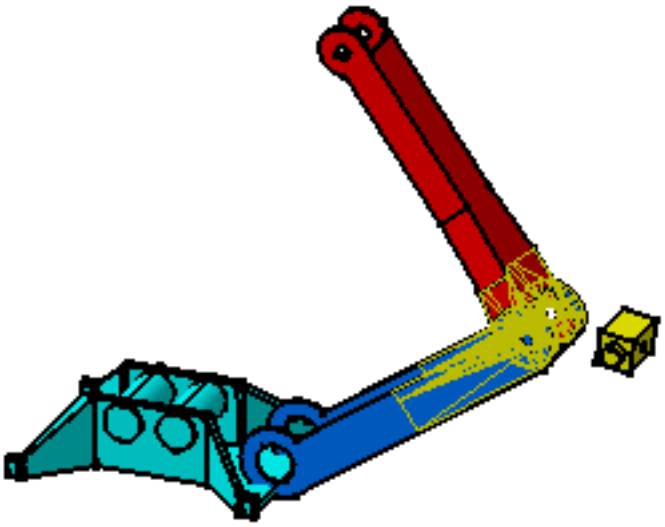

11. Click Cancel to exit.

Analyzing Constraints

This task shows you how to analyze the constraints of an active component.

All the items displayed in the Constraint Analysis dialog box are editable according to their respective behavior (Copy, Cut, Paste, Delete, etc).

Open the AnalyzingAssembly02.CATProduct document.

1. Select **Analyze -> Constraints**.

The **Constraint Analysis** dialog box is displayed. The **Constraints** tab displays the status of the constraints of the selected component:

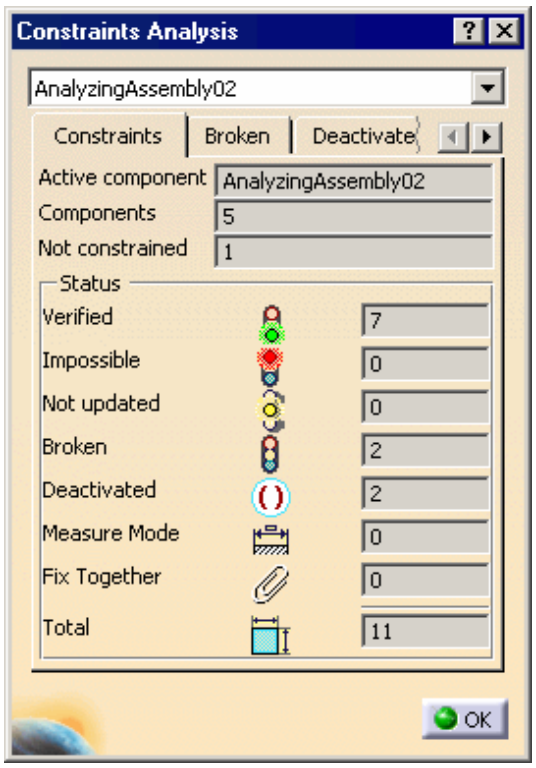

The **Constraints** tab displays the status of the constraints of the selected component:

- **Active Component** displays the name of the active component.
- **Component** displays the number of child components contained in the active component.
- **Not constrained** displays the number of child components not constrained in the active component.
- **Status** displays the status of the constraints:
  - **Verified** displays the number of verified constraints.
  - **Impossible** displays the number of impossible constraints. "Impossible" means that the geometry is not compatible with the constraint. For example, a contact constraint between two cylinders whose diameter is different is impossible.

    The yellow unresolved symbol is displayed in the specification tree on the constraint type icon:
  - **Not updated** displays the number of constraints to be updated. The application has integrated new specifications, which affect constraints.

    The update symbol is displayed in the specification tree on the constraint type icon:
  - **Broken** displays the number of broken constraints. A reference element is missing in the definition of these constraints. It may have been deleted for example. You can then reconnect this constraint (see Reconnecting Constraints).

    The yellow unresolved symbol is displayed in the specification tree on the constraint type icon:
  - **Deactivated** displays the number of deactivated constraints (see Deactivating or Activating Constraints).

The deactivated symbol is displayed in the specification tree. It precedes the constraint type icon: .

- **Measure Mode** displays the number of constraints in measure mode.
- **Fixed Together** displays the number of fix together operations.
- **Total** displays the total number of constraints of the active component.

In our scenario, the command displays the status of all constraints defined in AnalyzingAssembly product.

The command **Analyze -> Constraints**. displays the status of constraints defined for sub-assemblies too. What you have to do is set the combo box on top of the dialog box to the sub-assembly name of your choice.

In addition to the **Constraints** tab, the **Broken** tab and the **Deactivated** tab provide the name of the broken and deactivated constraints already indicated in the Broken and Deactivated fields.

The constraints are clearly identified in these tabs and you can select them. Once selected, they are highlighted both in the tree and in the geometry area.

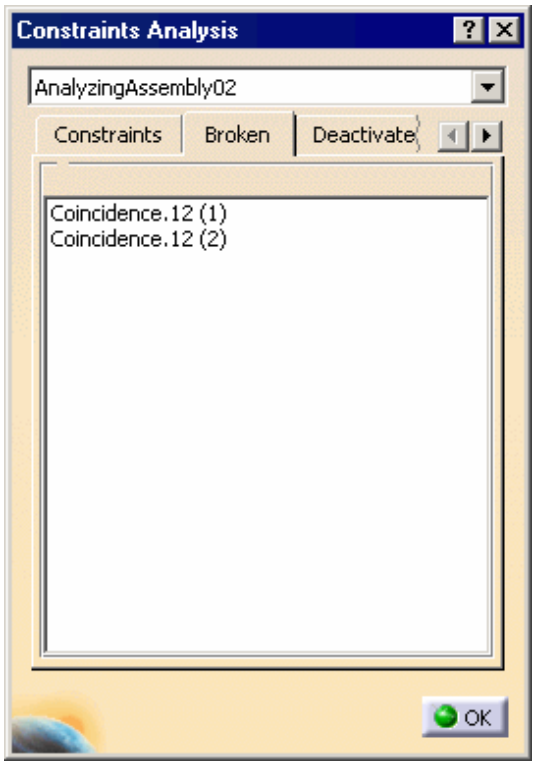

Additional tabs may be displayed if one of these constraint status exists:

- **Impossible**.
- **Not updated**.
- **Measure Mode**.

The tab Degrees of freedom also displays if all constraints of a given component are valid.

To redefine the colors of the different type of constraints, see Customizing Constraint Appearance.

This capability does not show overconstrained systems. The application detects them when performing update operations. For more information, see Inconsistent or Over-constrained Assemblies. You can also use the command **Analyze -> Dependence**, see Analyzing Dependences.

2. Click **OK** to exit and delete the following constraints to perform the rest of the scenario: **Coincidence.12**, **Parallelism.15** and **Line Contact.16**.

The document now contains only seven constraints. They all are verified.

3. Select **Analyze -> Constraints** again. The Constraints Analysis dialog box no longer contains the tabs Broken and Deactivated.

4. Click the **Degrees of freedom** tab.

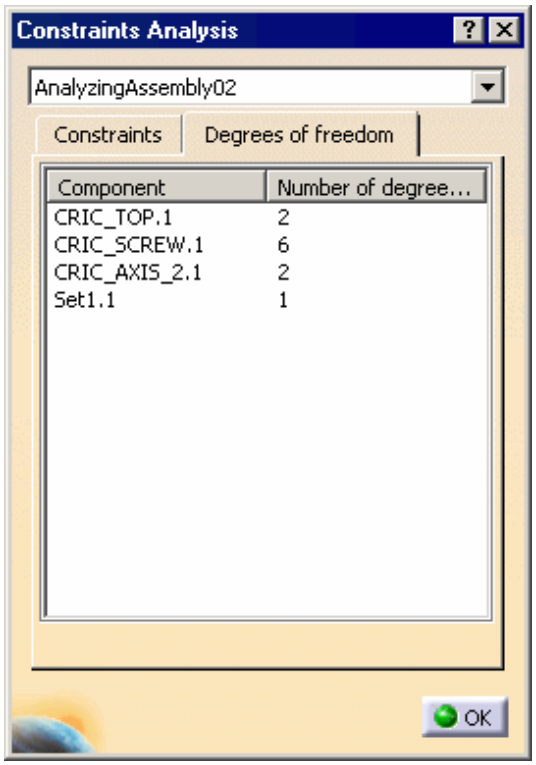

The application displays this tab only if all constraints are verified. The tab displays the components affected by constraints and the number of degrees of freedom remaining for each of them.

5. Double-click **CRIC_TOP.1**.

The **Degrees of Freedom Analysis** dialog box is displayed.

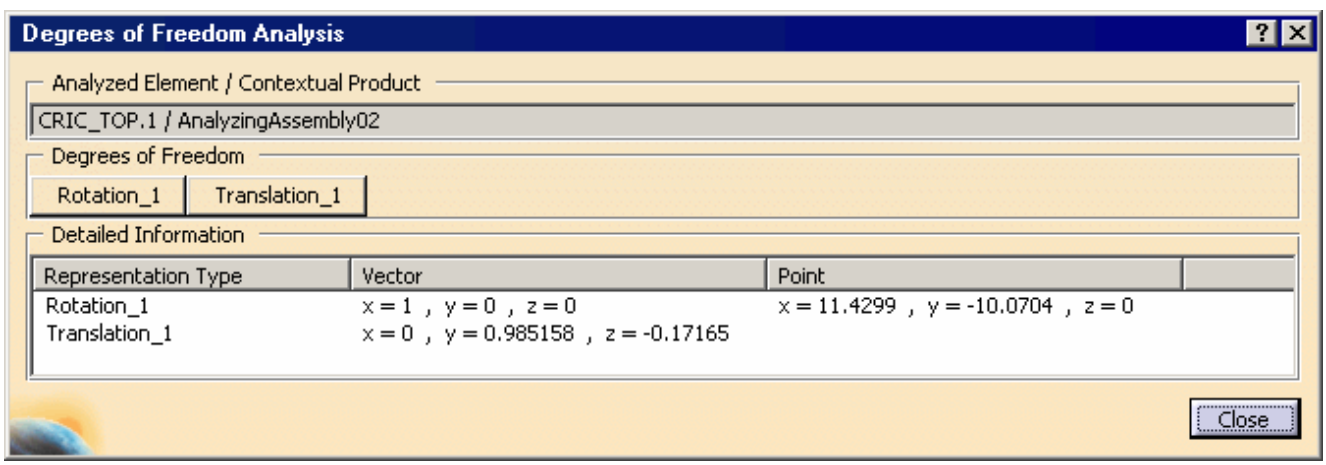

One rotation as well as one translation remain possible for CRIC_TOP.1. For more information, please refer to Analyzing Degrees of Freedom.

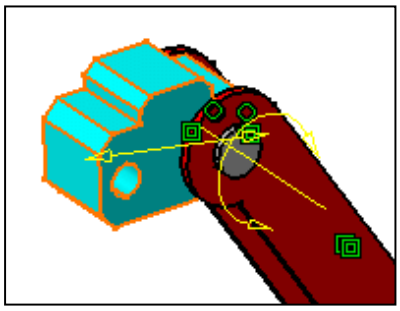

6. Click **Close** then **OK** to exit.

Analyzing Dependences

This task shows you how to see the relationships between components using a tree.

Open the AnalyzingAssembly03.CATProduct document.

1. Select the component **CRIC_BRANCH_3.1**.

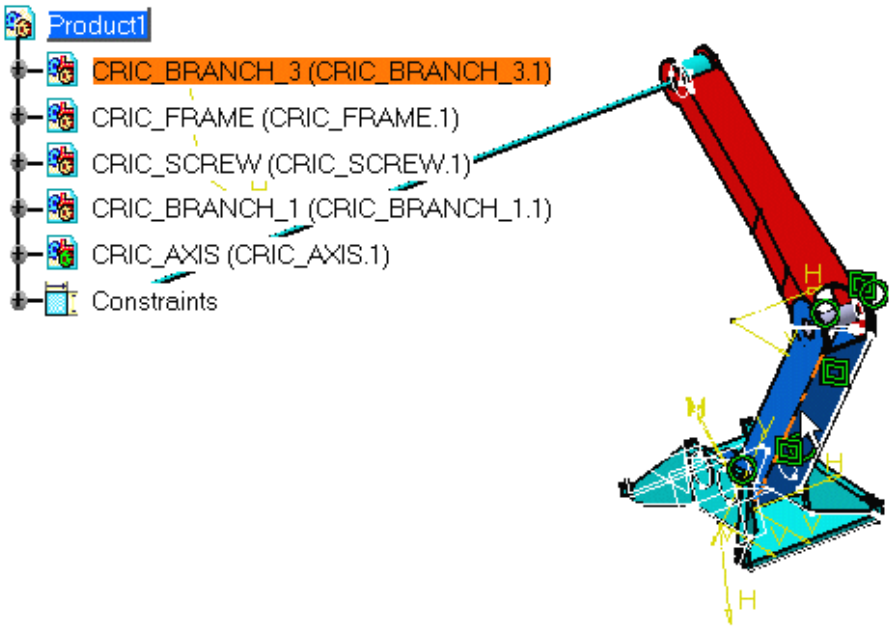

You can analyze the dependencies of your assembly by selecting the root of the tree too.

2. Select **Analyze -> Dependencies...** command.

The **Assembly Dependencies Tree** dialog box appears.

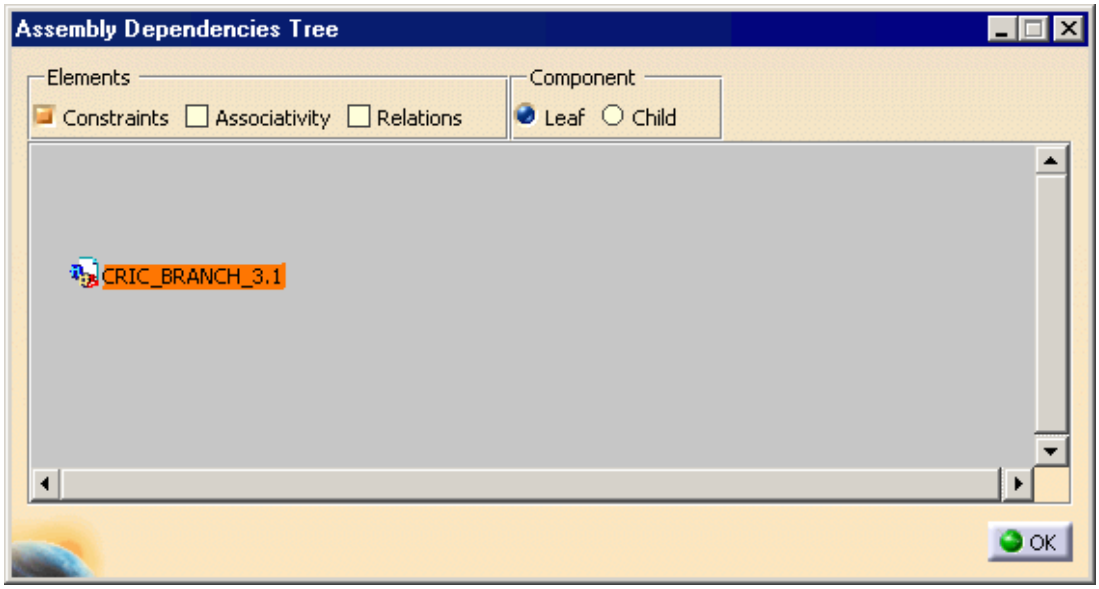

3. Right-click **CRIC_BRANCH3.1** and select the **Expand node** command from the contextual menu.

The constraints defined for this component then appear:

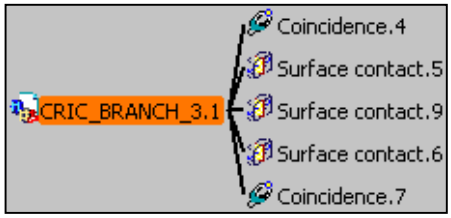

4. Right-click **CRIC_BRANCH3.1** and select the **Expand all** command from the contextual menu.

Now, the constraints and components related to the component you have selected are displayed:

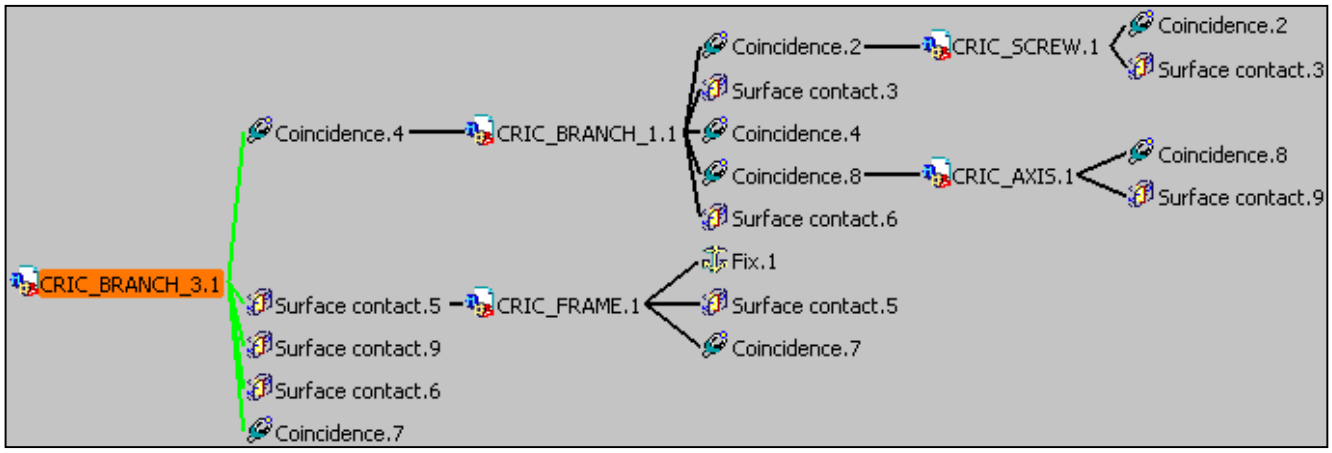

You can notice that there are:

- a coincidence constraint between **CRIC_BRANCH_3.1** and **CRIC_BRANCH_1.1**: **Coincidence.4**
- a surface contact constraint between **CRIC_BRANCH_3.1** and **CRIC_FRAME.1**: **Surface contact.5**
- a surface contact constraint between **CRIC_BRANCH_3.1** and **CRIC_AXIS.1**: **Surface contact.9**
- a surface contact constraint between **CRIC_BRANCH_3.1** and **CRIC_BRANCH_1.1**: **Surface contact.6**
- a coincidence constraint between **CRIC_BRANCH_3.1** and **CRIC_FRAME.1**: **Coincidence.7**

5. Checking the different options available in the **Elements** frame.

You can display the following:

- **Constraints**: by default, this option is activated
- **Associativity**: shows components edited in Assembly Design context, see Designing in Assembly Design Context. Contextual components are linked to support components by green lines in the graph.
- **Relations**: shows formulas. For more information, please refer to Knowledge Advisor User's Guide.

6. You can also display the relationships by filtering the components you wish to see. Either check the **Child** option to take the children of the component into account or check **Leaf** to hide them.

Contextual commands are available:

- **Expand all**: lets you see the whole relationship. Note that double-clicking produces the same result.
- **Expand node**: lets you see the relationship under the node.
- **Set as new root**: sets the selected component as the component whose relationships are to be examined.

Zooming in and zooming out in the tree is allowed.

7. Click **OK** to close the dialog box.

Analyzing Updates

Operations such as moving components (see Moving Components) or editing constraints (see Editing Constraints) sometimes affect the integrity of the whole assembly. You then need to know what to do to restore a correct product. The application provides a tool for detecting if your assembly requires updates. This tool is particularly useful when working with large assemblies. You can update a part or a product without updating the whole assembly, using the **Analyze Update** command.

Open the AnalyzingAssembly04 document.
This scenario assumes that the Manual Update option is on. For more about this option, refer to Update.

1. Select **Analysis** product in the specification tree.

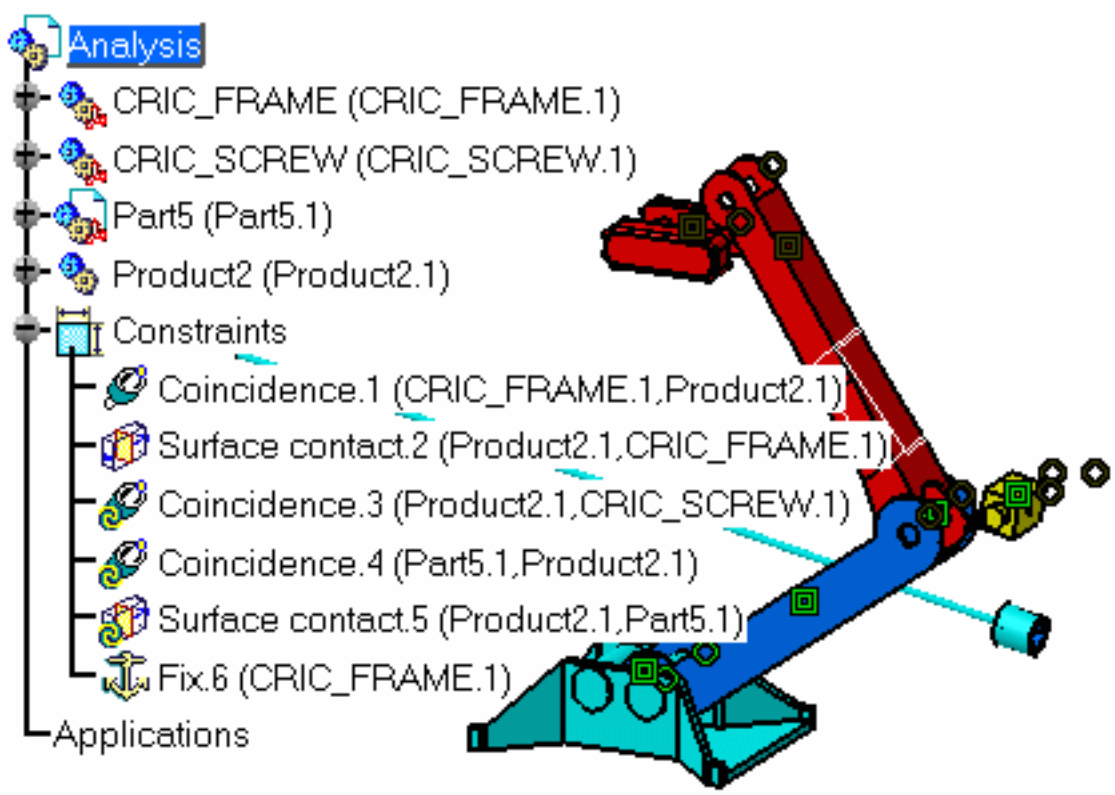

2. Select the **Analyze -> Update** command.

The **Update Analysis** dialog box appears.

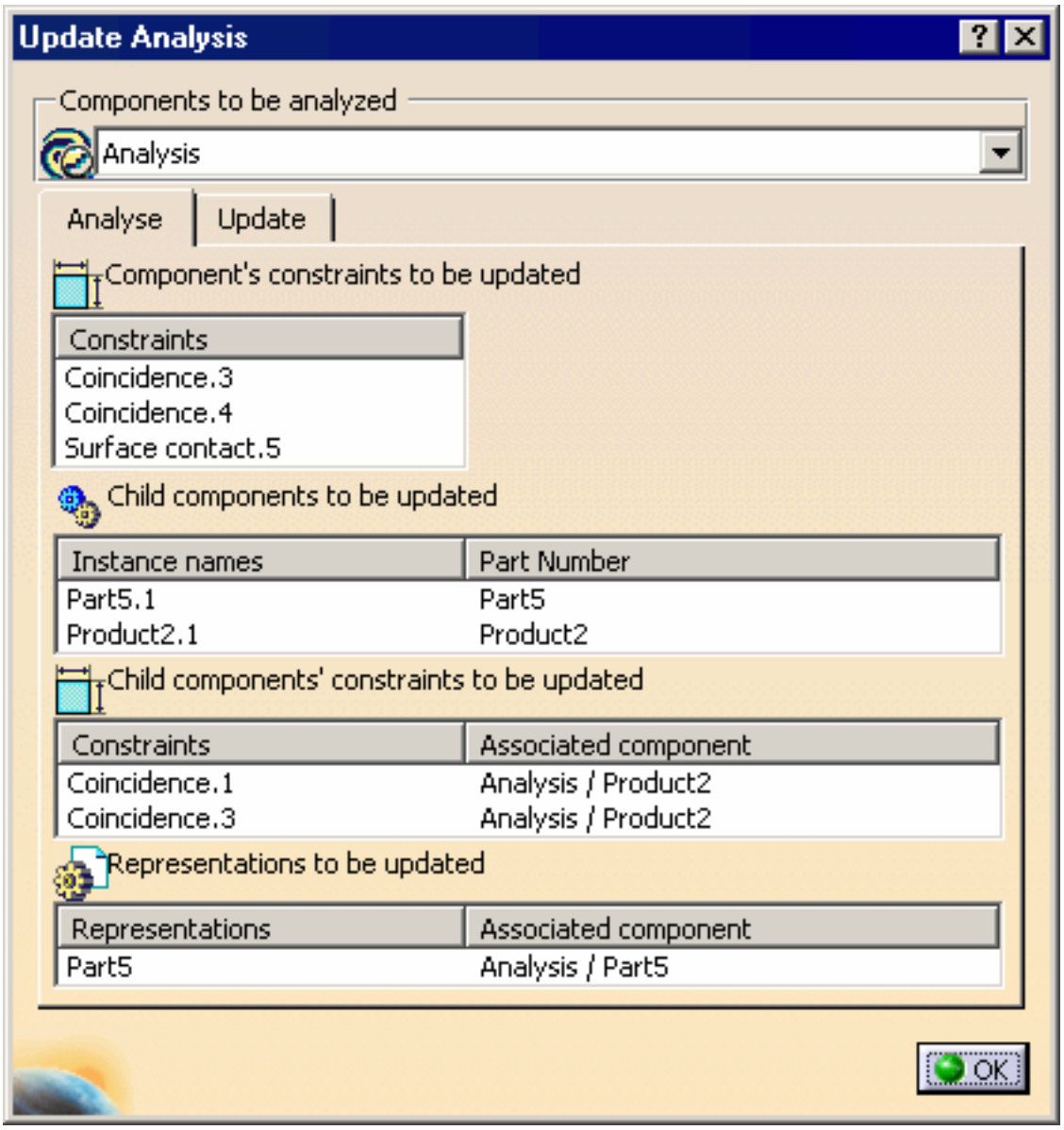

In our example, it provides the name of the entities to be updated, i.e:

- name of the product or component under study
- name of the constraints defined on this product or component
- name of the children of this product or component
- name of the constraints defined on the children
- name of the representations defined on the children

In some cases, it also displays the name of the representations associated to parts.

3. Select **Concidence.4** from the **Constraints** field.

The application highlights this constraint both in the specification tree and in the geometry area.

4. Set the **Components to be analyzed** to **Analysis / Product2**.

Two constraints need updating.

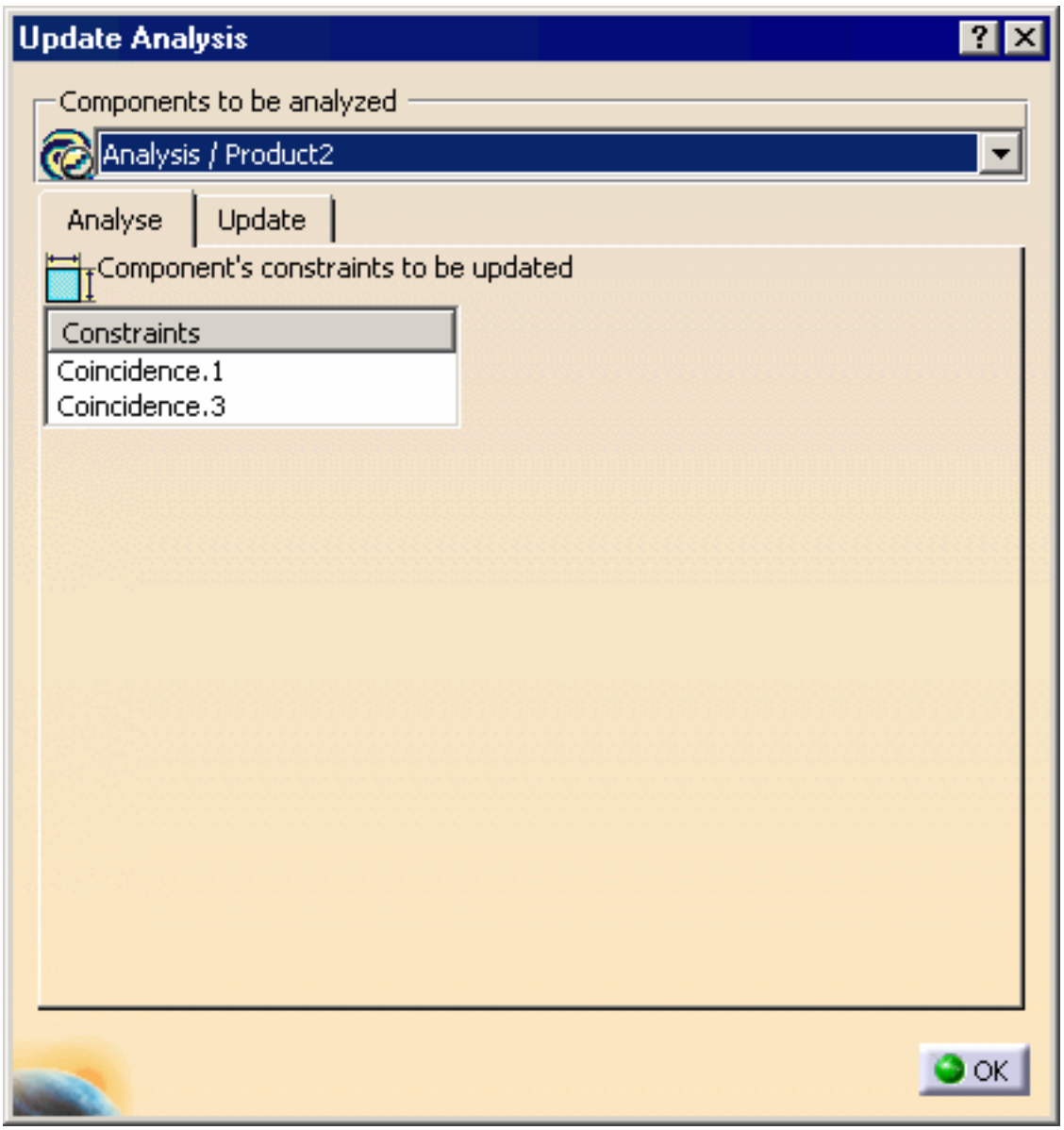

5. Set the **Components to be analyzed** to **Analysis**.

6. Click the **Update** tab and multi-select **Analysis / Product2**.

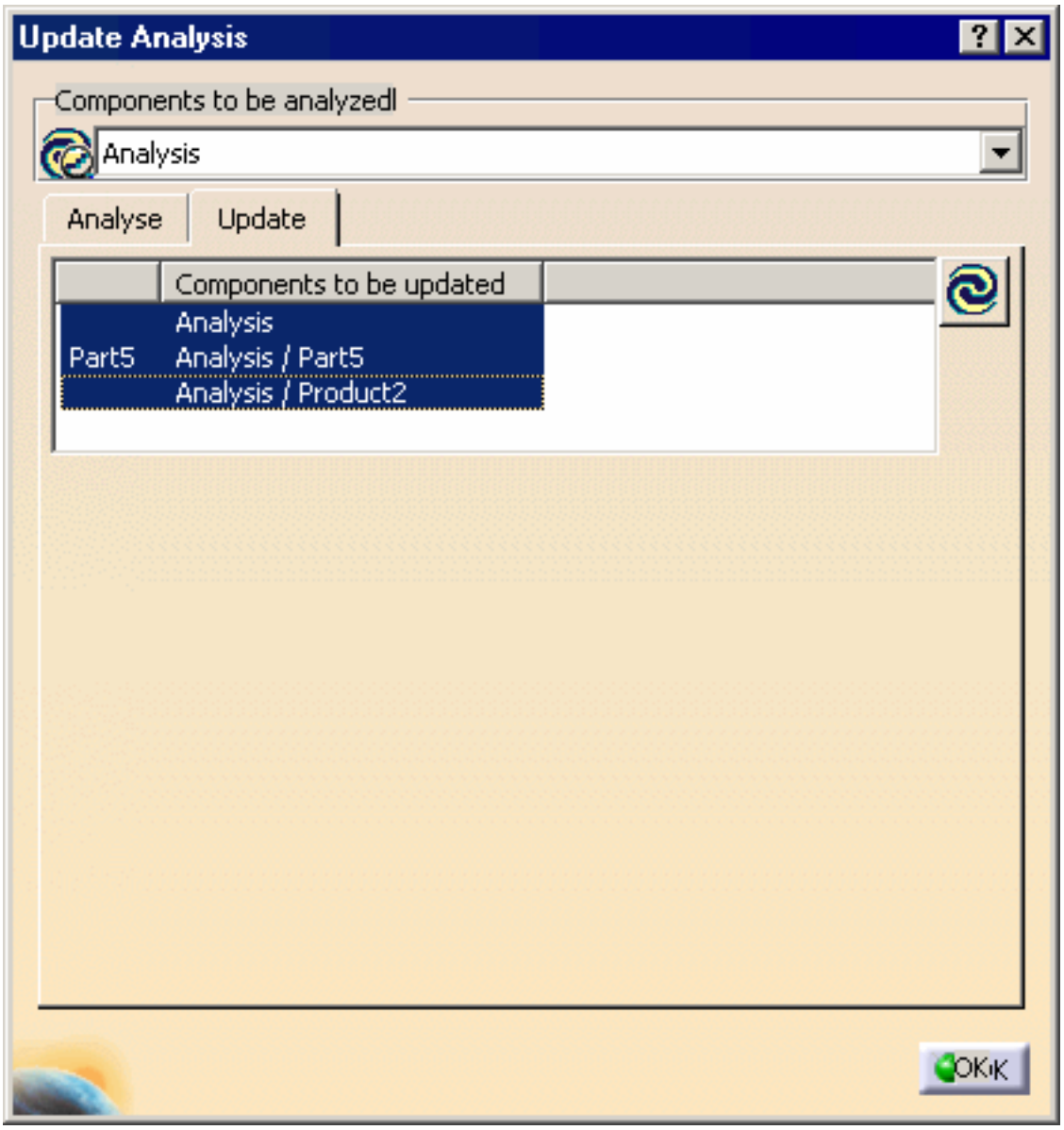

7. Click the **Update** icon to the right of the dialog box.

The part is updated:

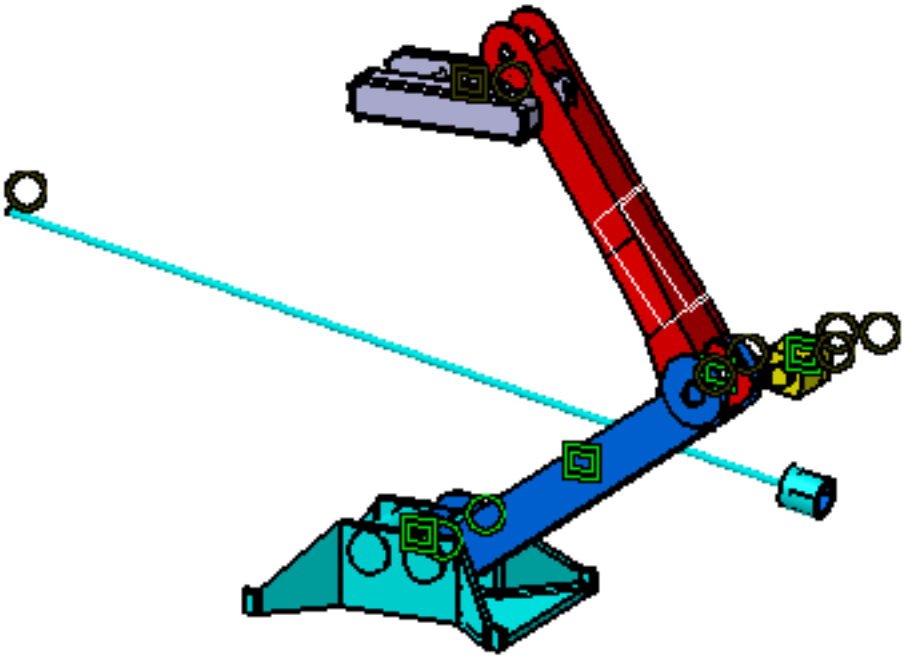

The **Update Analysis** dialog changes and displays the update status for the **Analysis** component.

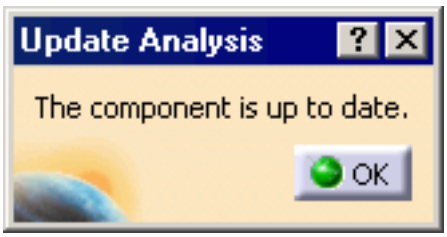

8. Click **OK** to close the dialog box.

Analyzing Degrees of Freedom

This task explains how to see if you need to set additional constraints to the components making up your assembly.

The degrees of freedom analysis is performed from assembly constraints only. This is mean that constraints from design in context or assembly pattern are not taken into account.

The analysis is performed from the active component and its child components set, but you must know that:

- Selecting of any sub-component of a child component returns the analysis of this child component relative to its active parent component only. If you want to analyze the sub-component relative to a child component, activate the child component before.
- Flexible child components (and their flexible sub-components) of the active component are not taken into account for the analysis. In this case, the analysis is performed from the first rigid sub-component found in the selection, under the active component.

Translations can be performed in a plane is represented by two vectors. These vectors define the translation plane but depending on the geometry, they can constitute an orthonormal system or not. In other words, a planar translation which normal to the plane has the coordinates (x=0, y=1, z=0) can sometimes be represented by:

- These two vectors:
  - vector 1: x=0, 707107, y=0, z=0,707107
  - vector 2: x=-0, 707107, y=0, z=-0, 707107
- or by these ones:
  - vector 1: x=1, y=0, z=0
  - vector 2: x=-0, y=0, z=1

Open the AnalyzingAssembly04 CATProduct document.

1. Click the **Update** icon to update the assembly:

2. Right-click **CRIC_SCREW (CRIC_SCREW.1)** and select the **Analyze -> Degrees of Freedom** command command from the contextual menu.

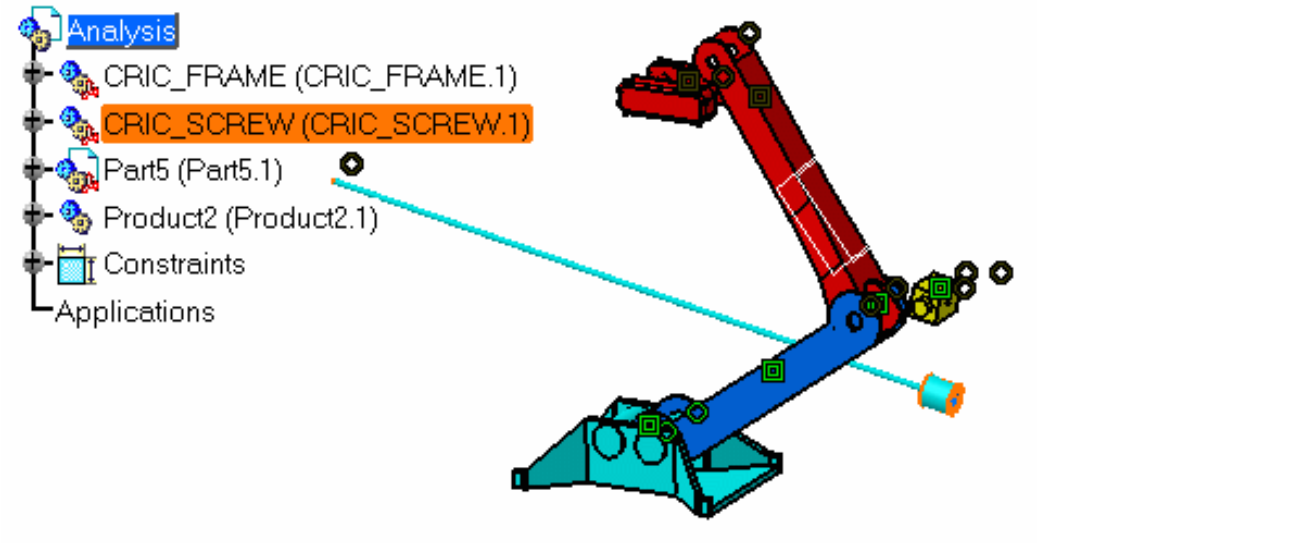

The **Degrees of Freedom Analysis** dialog box is displayed.

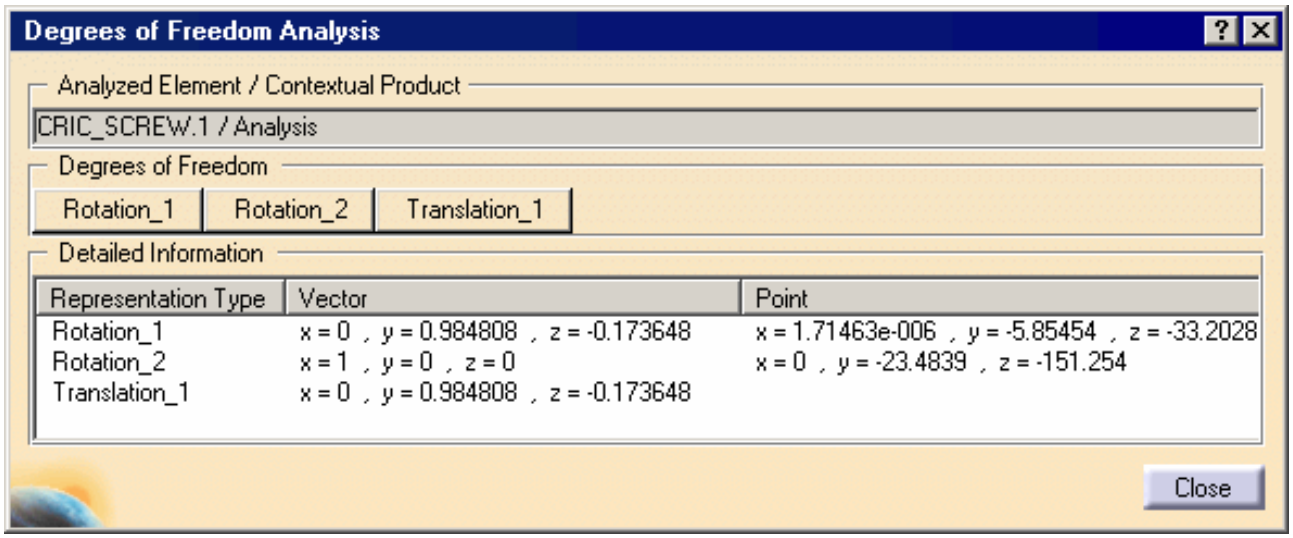

The dialog box displays all rotations and translations that remain possible for the selected component. In our scenario, you can rotate CRIC_SCREW (CRIC_SCREW.1) in two ways or translate it in one way.

If you look at the geometry, you can notice that these rotations and translations are represented in yellow.

3. Click the **Rotation_2** button.

The graphic element representing this possible rotation is now highlighted in the geometry for easy identification.

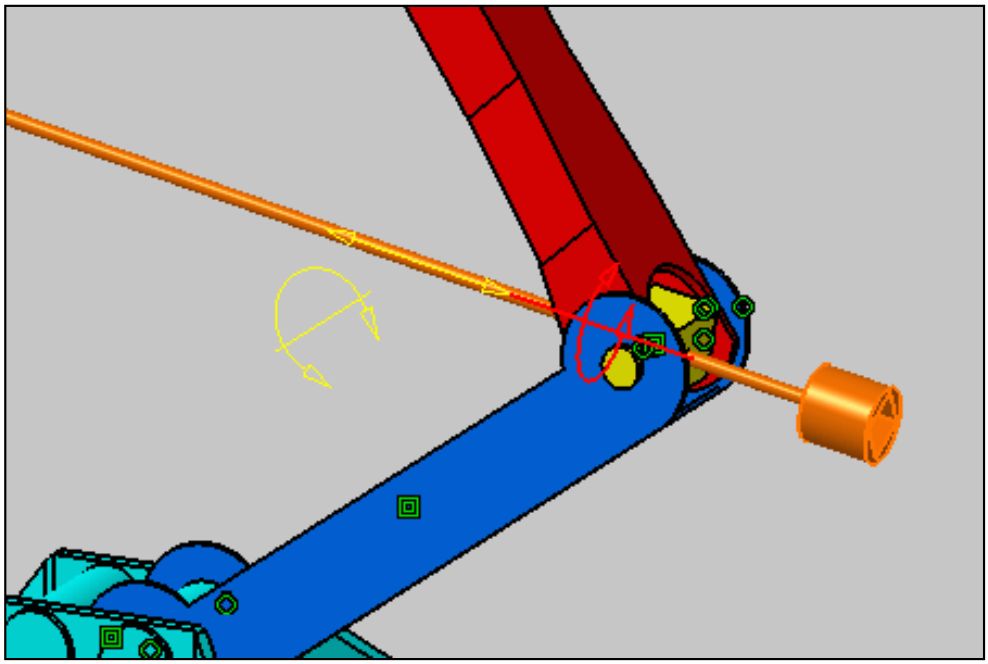

As detailed in the dialog box, you can perform a rotation around the vector which coordinates are x=1, y=0 and z=0 and using the point with coordinates x=0, y=-23.4839 and z=-151.254 as the rotation center.

4. Click the **Translation_2** button.

The graphic element representing this possible rotation is now highlighted too.

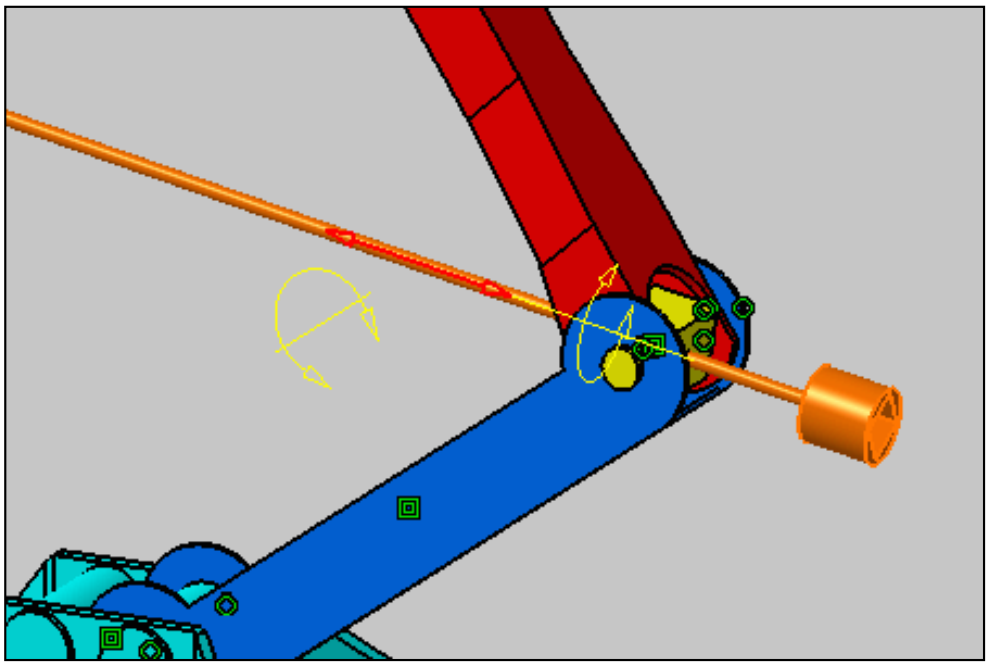

As detailed in the dialog box, you can perform a translation along the vector which coordinates are x=0, y=0.984808 and z=-0.173648.

5. Click **Close** to exit the command.

Defining a Multi-Instantiation

This task shows you how to repeat components as many times as you wish in the direction of your choice.

The option "Automatic switch to Design mode" is now available for this command. For more about this option, refer to Access to geometry.

Open the Multi_Instantiation.CATProduct document.

1. Select the component you wish to instantiate, that is CRIC_BRANCH_3.

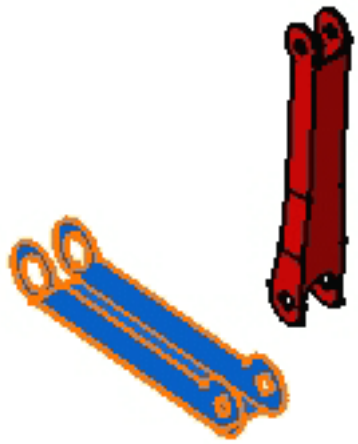

2. Click the **Define Multi-Instantiation** icon:

The Multi-Instantiation dialog box is displayed, indicating the name of the component to be instantiated.

The shortcut Ctrl + E calls the command too.

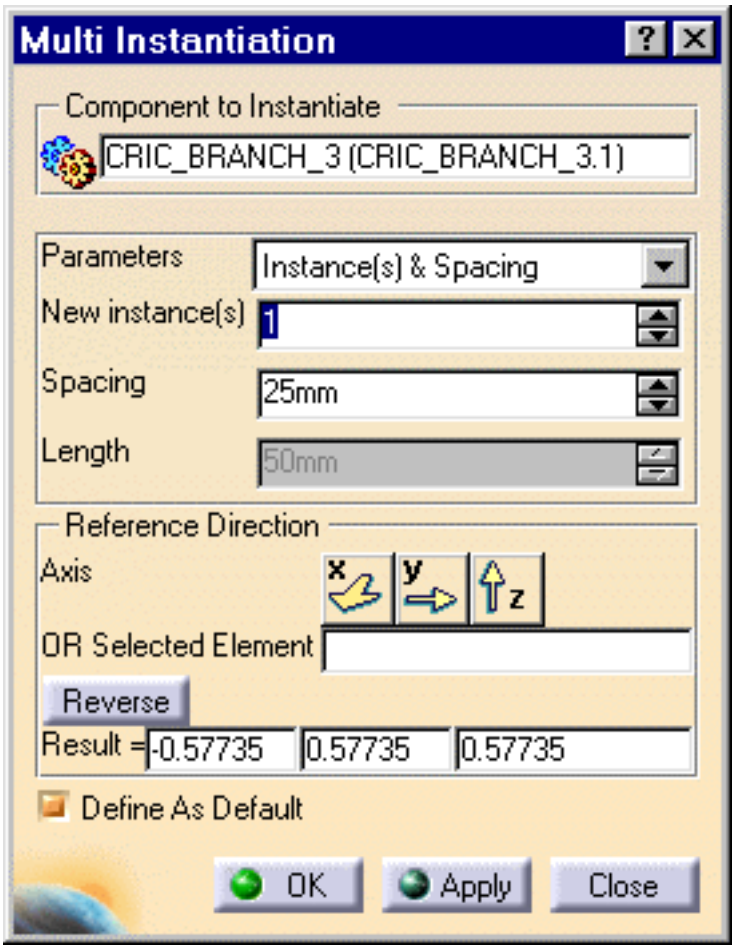

3. The Parameters option lets you choose between the following categories of parameters to define:

   Instances & Spacing
   Instances & Length
   Spacing & Length

   Keep the Instances & Spacing parameters option and enter 3 as the number of instances and 90mm as the value for the spacing between each component.

4. To define the direction of creation, check x axis.

   There is another way of defining a direction. You can select a line, axis or edge in the geometry. In this case, the coordinates of these elements appear in the Result field.

   Clicking the Reverse button reverses the direction.

   The application previews the location of the new components:

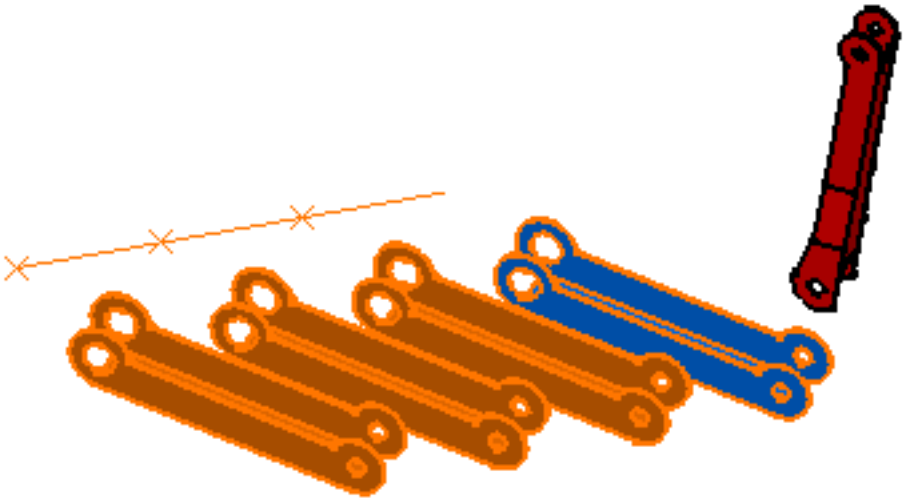

5. Make sure the option Define as Default is on. If it is so, the parameters you have just defined are saved and will be reused by the Fast Multi-Instantiation command.

6. Click OK to create the components.

Three additional components are created in the x direction. The tree displays them as well.

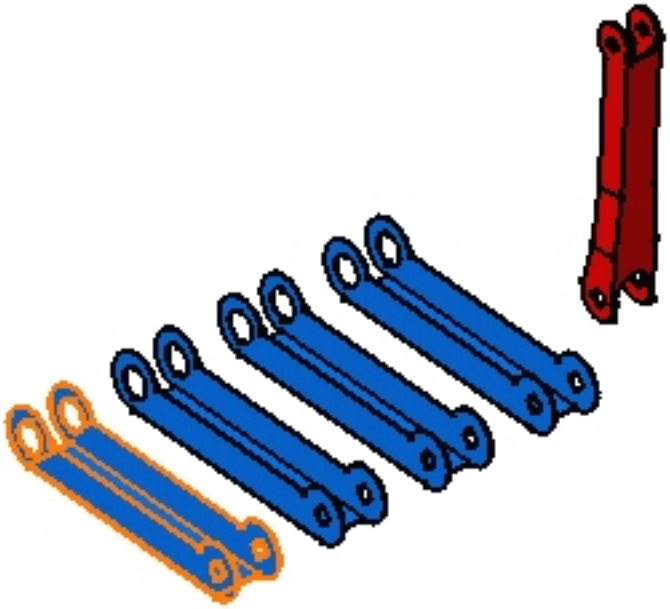

The Apply button executes the command but the dialog box remains open so as to let you repeat the operation as may times as you wish.

Fast Multi-Instantiation

This task shows you how to repeat components using the parameters previously set in the Define Multi_Instantiation command.

You will use the Fast Multi-Instantiation command to quickly repeat the component of your choice. The operation is very simple.

Make sure the option Work with the cache system is deactivated (for more refer to Working with a Cache System) and open the Fast_Multi_Instantiation.CATProduct document.

1. Select the component you wish to instantiate, that is CRIC_BRANCH_3.

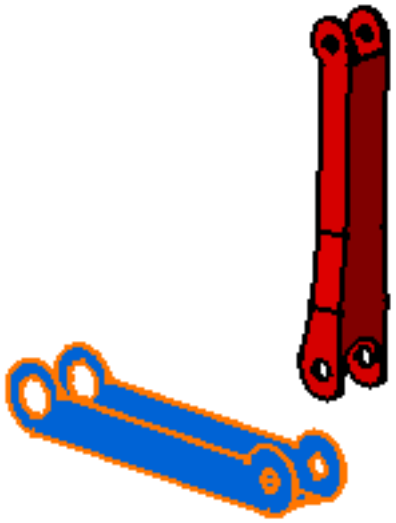

2. Click the **Fast Multi-Instantiation** icon .

The shortcut Ctrl + D calls the command too.

The result is immediate. Three components are created according to the parameters defined in the Multi-Instantiation dialog box.

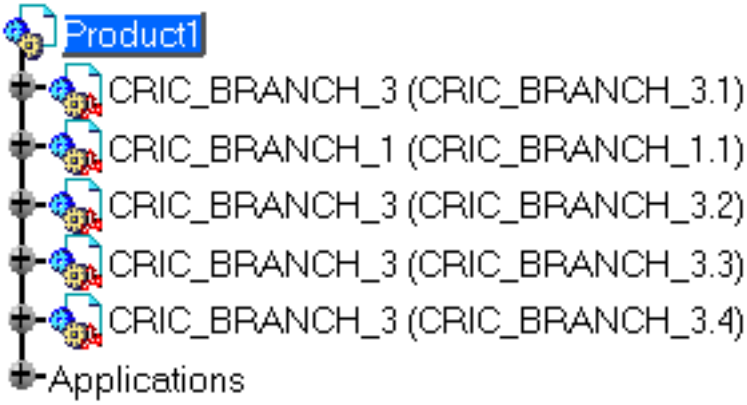
Product1
CRIC_BRANCH_3 (CRIC_BRANCH_3.1)
CRIC_BRANCH_1 (CRIC_BRANCH_1.1)
CRIC_BRANCH_3 (CRIC_BRANCH_3.2)
CRIC_BRANCH_3 (CRIC_BRANCH_3.3)
CRIC_BRANCH_3 (CRIC_BRANCH_3.4)
Applications

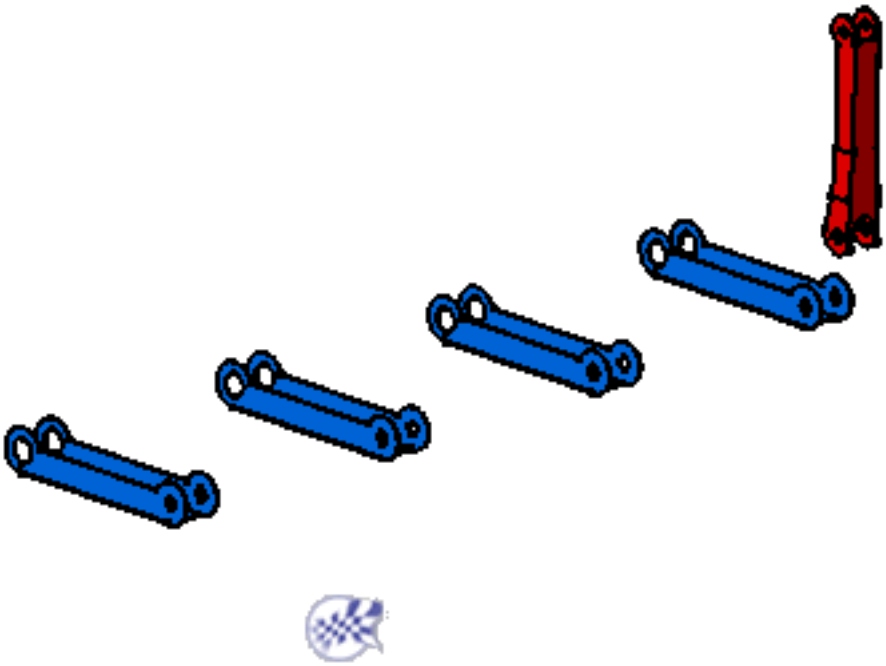

Inserting an Existing Component with Positioning

This task will show you how to insert and position a component as the same operation.

This functionality is an enhancement of the Insert Existing Component command for Assembly Design workbench. The Smart Move interface will enable the easy positioning of inserted components in the assembly, at the very moment of their insertion. It will also enable the positioning by creation of constraints. If there is no geometry to position when the component is inserted, this functionality has the same behavior as the Insert Existing Component command plus a visualization. See Smart Move or Smart Move with Viewer.

Open the MovingComponents01 document.

1. Click the **Existing Component with Positioning** icon:

2. Select **Product1** in the specification tree.

3. Select the CRIC_JOIN CATPart document in the **File Selection** dialog box.

   The **Smart Move** dialog box appears.

4. In this dialog box, select the axis of the part.

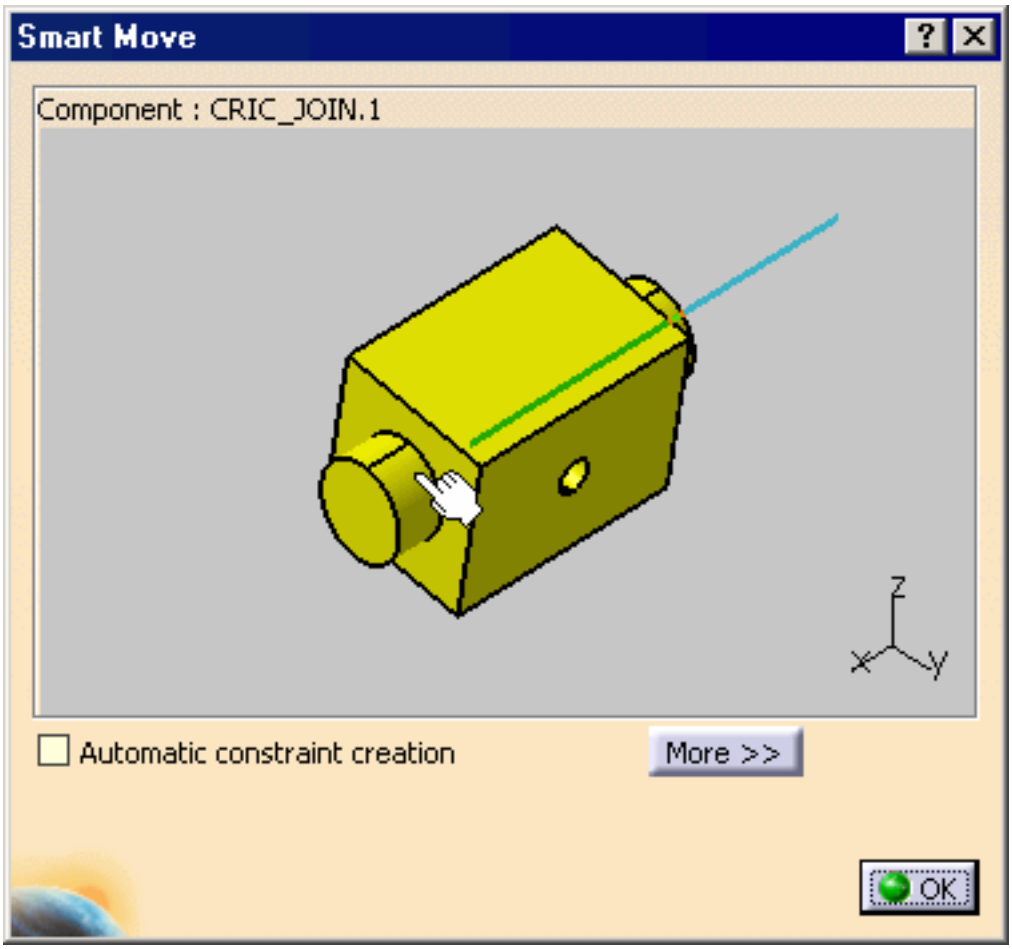

5. In this geometry window, select the axis of the CRIC_BRANCH_3 part.

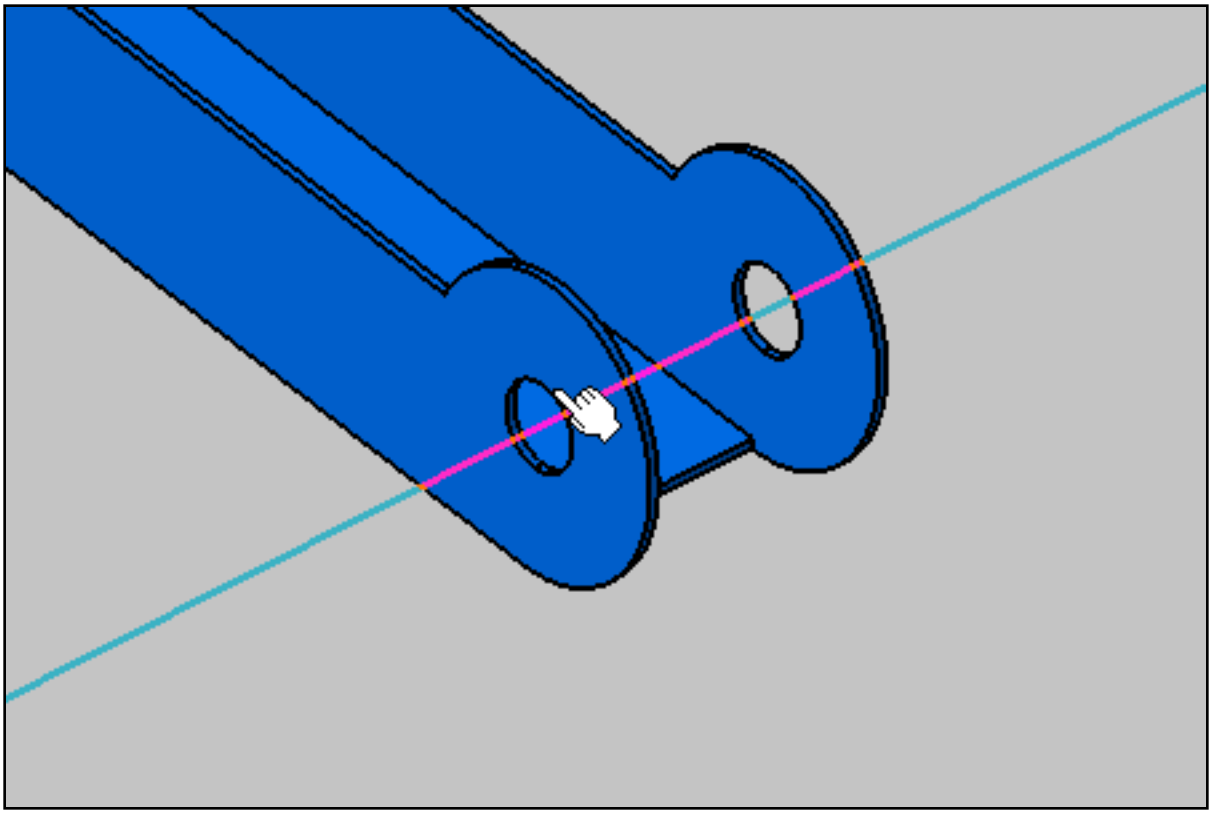

CRIC_JOIN is snapped with CRIC_BRANCH_3 part.

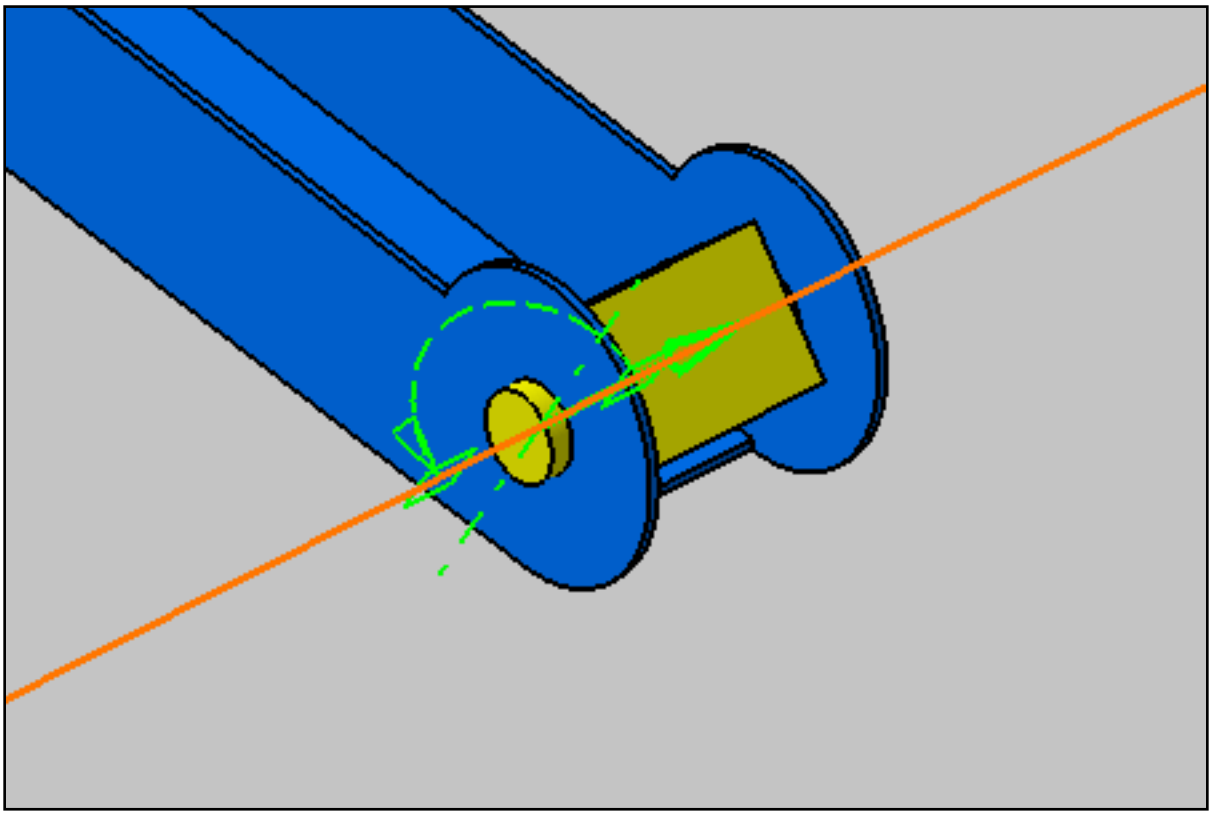

6. Click **OK** in the **Smart Move** dialog box.

Managing Constraints

This section describes the notions and operating modes you will need to set and use constraints in your assembly structure. Constraints allow you to position mechanical components correctly in relation to the other components of the assembly. You just need to specify the type of constraints you wish to set up between two components, and the system will place the components exactly the way you want. You can also use constraints to indicate the mechanical relationships between components. In this case, constraints are included in the specifications of your assembly.

Create a Coincidence Constraint: Click this icon, select the faces to be constrained and enter the properties of the constraint in the dialog box.

Create a Contact Constraint: Click this icon and select the faces to be constrained.

Create an Offset Constraint: Click this icon, select the faces to be constrained and enter the properties of the constraint in the dialog box.

Create an Angle Constraint: Click this icon, select the faces to be constrained and enter the properties of the constraint in the dialog box.

Fix a Component: Click this icon and select component to be fixed.

Fix Components Together: Click this icon, select the components to be fixed and enter a name for this group in the dialog box.

Quick Constraint: Check the list of constraint creation, click the icon and select the elements to be constrained.

Change Constraint: Select the constraint to be changed, click this icon and select the new type of constraint in the dialog box.

Deactivate or Activate Constraints: Select the constraint to be (de)activated and use the Deactivate or Activate contextual command.

Select the Constraints of Given Components: Select the components, right-click and select xxx object -> Component Constraints contextual command.

Editing Constraints: Double-click the constraint to be edited.

Update One Constraint Only: Right-click the constraint to be updated and select the **Update** contextual command

Modify the Properties of a Constraint: Double-click the constraint and enter new properties in the dialog box.

Use a Part Design Pattern: Select the pattern, select the component to be repeated, click this icon and enter the specifications in the dialog box.

Set a Constraint Creation Mode: Click any of these three constraint creation mode icons

Inconsistent or Over-constrained Assembly

Search for URLs Associated with Constraints: Click this icon and select the constraint of interest.

Reordering Constraints in the Specification Tree

Refreshing Constraints

Creating a Coincidence Constraint

This task consists in applying a constraint between two faces. See Coincidence Constraints reference.

Before constraining the desired components, make sure it belongs to a component defined as active (the active component is blue-framed and underlined).

Open the Constraint1.CATProduct document.

1. Click the **Coincidence Constraint** icon:

2. Select the face to be constrained, that is the red face as shown.

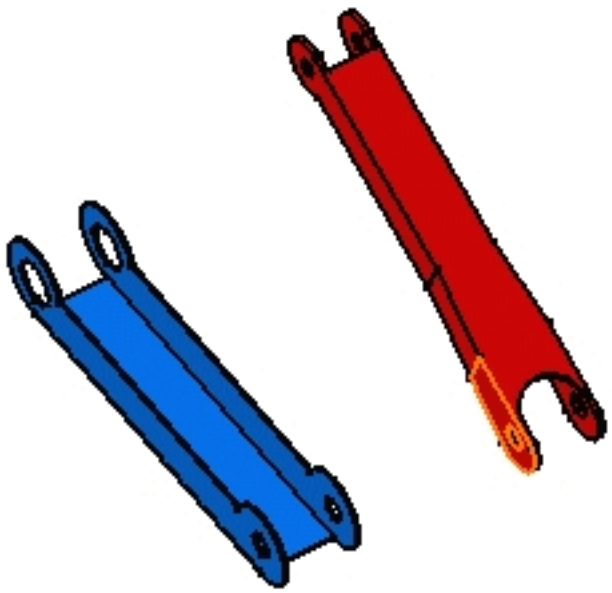

3. Select the second face to be constrained, that is the blue circular face in the direction opposite to the red face.

   Green arrows appear on the selected faces, indicating orientations.

4. The Constraint Properties dialog box that appears displays the properties of the constraint. The components involved and their status are indicated. You can define the orientation of the faces to be constrained by choosing one of these options:

- Undefined (the application finds the best solution)
- Same
- Opposite

Note that when changing a **Same** orientation into an **Opposite** orientation or vice-versa, the application may sometimes positions the parts in an unexpected way especially if your system is under-constrained.

For the purposes of our scenario, set the Opposite option.

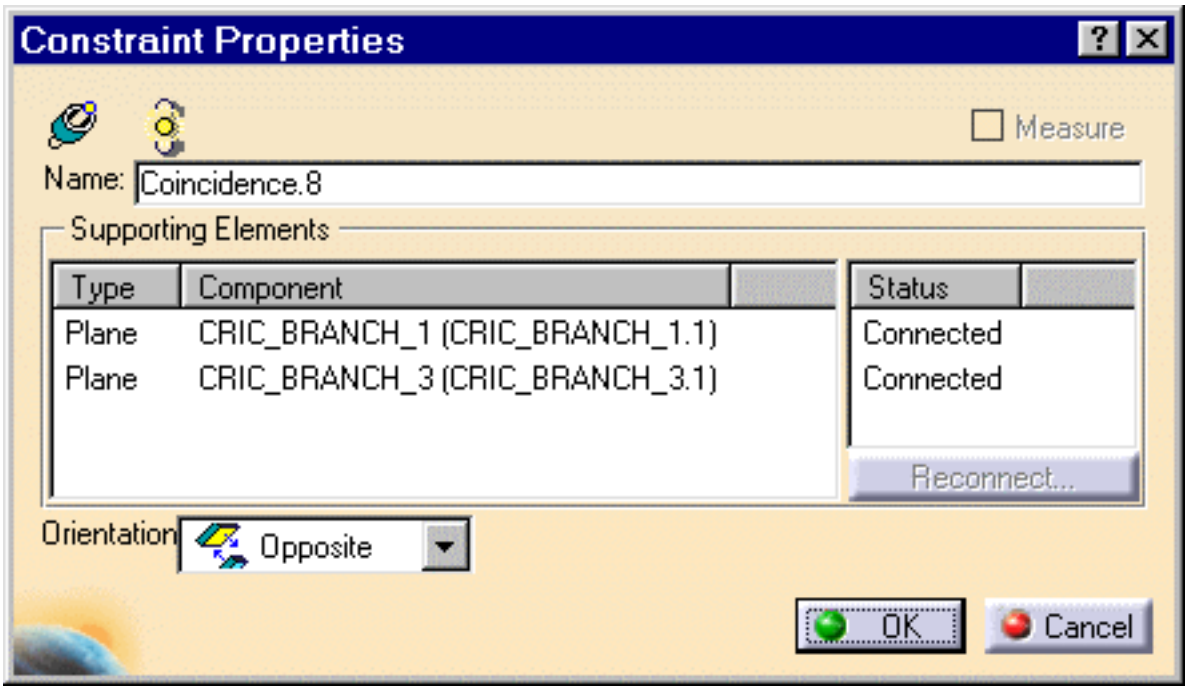

5. Click **OK** to create the coincidence constraint.

The application chooses which component is to be moved to adopt its new position. As the assembly is not iso-constrained, any component can be moved. In other words, you cannot control which components will be moved.

Green graphic symbols are displayed in the geometry area to indicate that this constraint has been defined.

This constraint is added to the specification tree too.

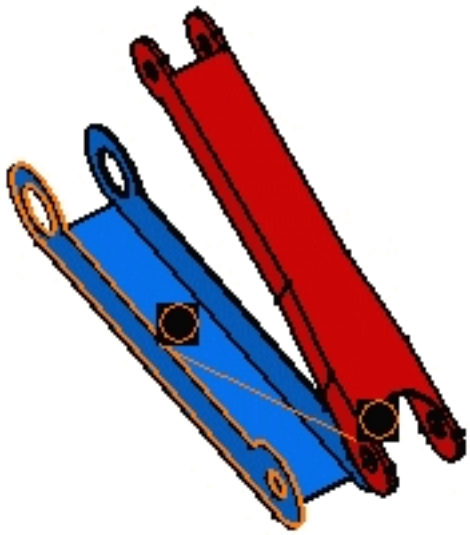

Graphic symbols used for constraints can be customized. For more information, refer to **Customizing Constraint Appearance**.

Creating a Contact Constraint

This task consists in applying a constraint between two faces. See Contact Constraints reference.

You can create contact constraint between oriented plane.

Open the Constraint7.CATProduct document.

Before constraining the desired components, make sure it belongs to a component defined as active (the active component is blue framed and underlined).

1. Click the **Contact Constraint** icon:

2. Select the face to be constrained, that is the red face as shown.

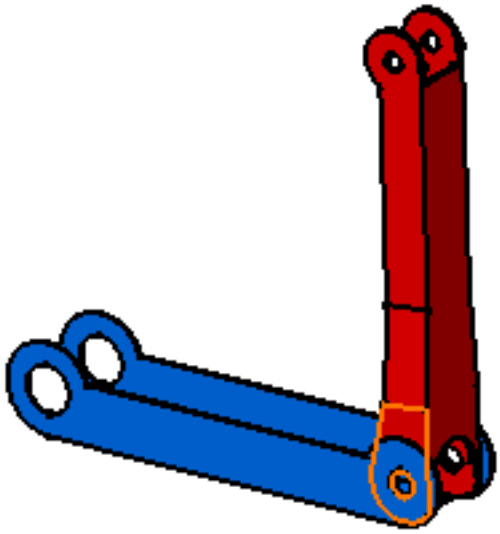

3. Select the second face to be constrained, that is the blue inner face in the direction opposite to the red face.

As the contact constraint is created, the red component is moved so as to adopt its new position. Green graphic symbols are displayed in the geometry area to indicate that this constraint has been defined.

This constraint is added to the specification tree too.

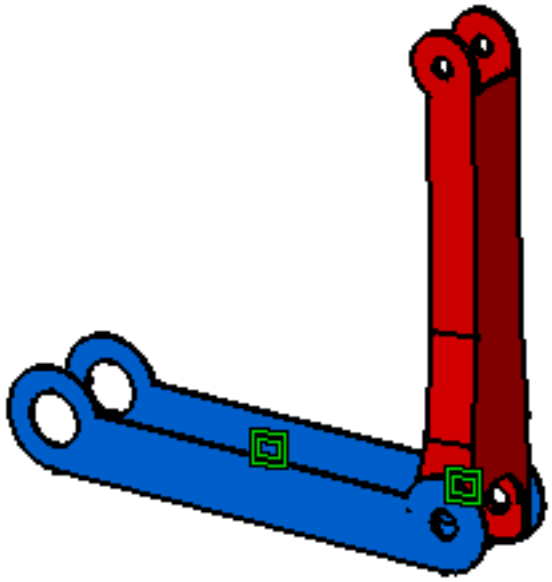

Graphic symbols used for constraints can be customized. For more information, refer to **Customizing Constraint Appearance**.

Creating an Offset Constraint

This task consists in applying an offset constraint between two faces. For information about this type of constraint, see Offset Constraints reference section.

Before constraining the desired components, make sure it belongs to a component defined as active (the active component is blue-framed and underlined).

Open the AssemblyConstraint02.CATProduct document.

1. Click the **Offset Constraint** icon:

2. Select the face to be constrained, that is the yellow face as shown.

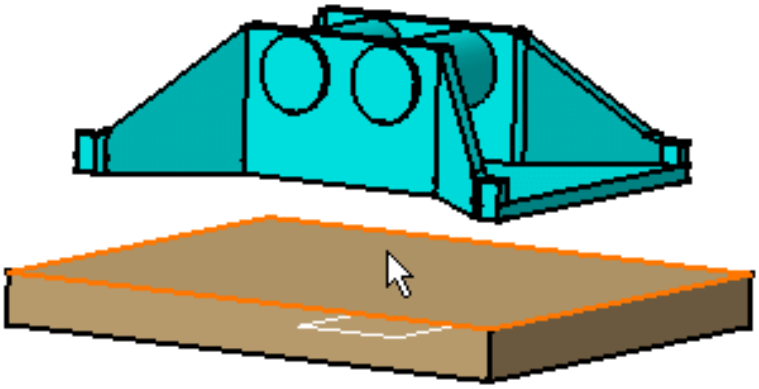

3. Select the second face to be constrained, that is the blue face in the direction opposite to the yellow face.

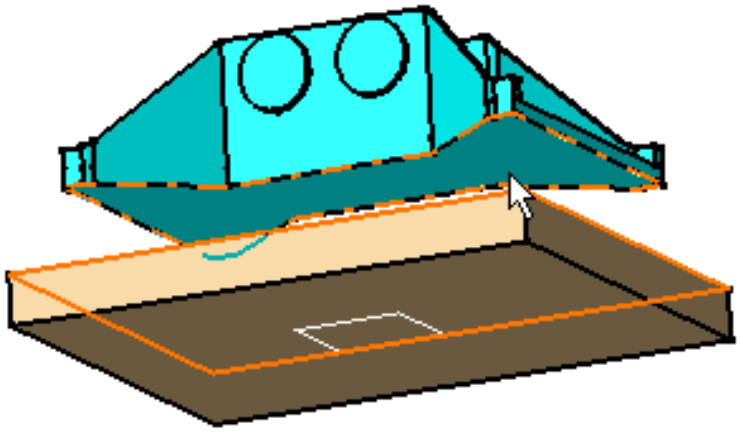

Green arrows appear on the selected faces, indicating the orientations.

The **Constraint Properties** dialog box that appears displays the properties of the constraint. The components involved and their status are indicated. You can define the orientation of the faces to be constrained by choosing one of these options:

- **Undefined** (the application finds the best solution)
- **Same**
- **Opposite**

Note that when changing a **Same** orientation into an **Opposite** orientation or vice-versa, the application may sometimes position the parts in an unexpected way especially if your system is under-constrained.

For the purposes of our scenario, keep the **Opposite** option.

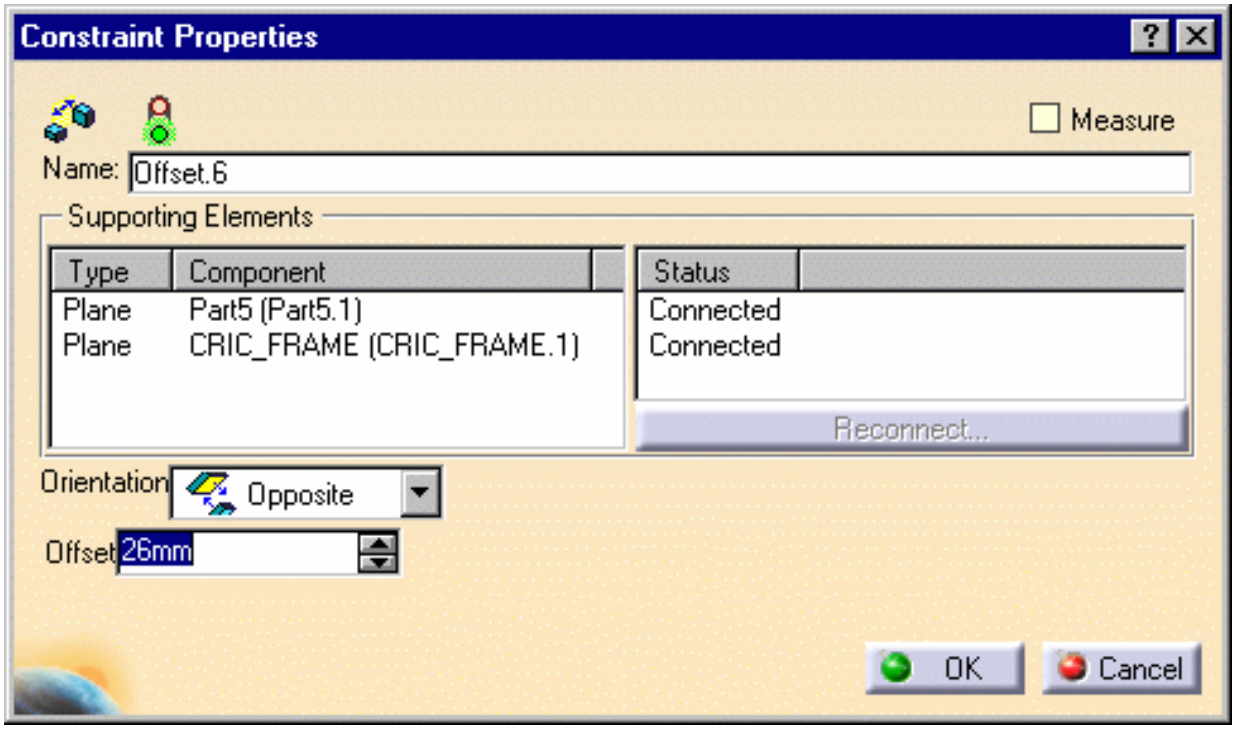

4. Enter 38 mm in the **Offset** field.

Affecting a value to an offset constraint, means that the constraint drives the distance between the components.

Instead of entering a value, you can check the **Measure** option. In this case, the value is obtained from the geometry.

5. Click **OK** to create the offset constraint.

A green arrow is displayed in the geometry area to indicate that this constraint has been defined. The offset value is displayed too. This constraint is added to the specification tree too.

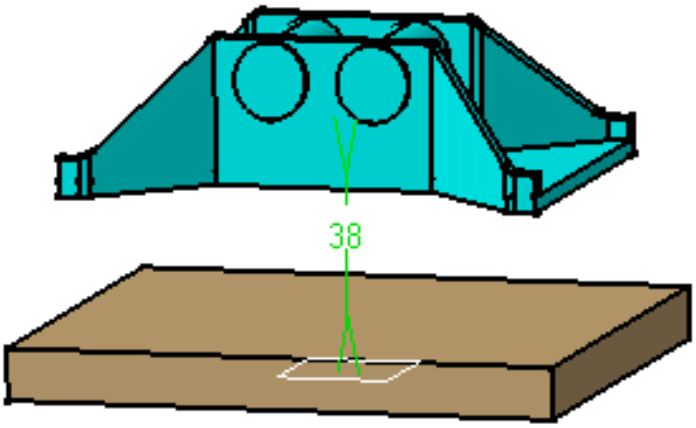

Editing Offset Constraints

If you decide to make your constraint a measure (for that, just check the **Reference** option), the offset constraint value displayed in the **Value** field is the distance between the components at the time you created the constraint. If you wish to modify that value, enter the new value, update the document, then check the **Reference** option.

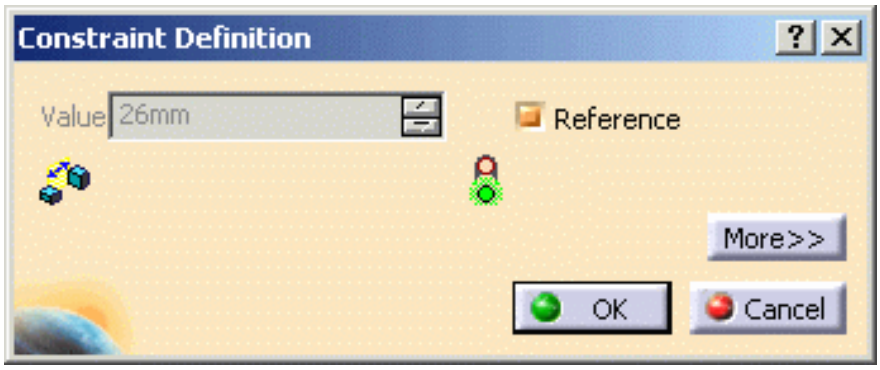

Graphic symbols used for constraints can be customized. For more information, refer to **Constraint Creation**.

Creating an Angle Constraint

This task consists in setting an angle constraint between two planes. See Angle Constraints reference.

Before constraining the desired components, make sure it belongs to a component defined as active (the active component is blue-framed and underlined).

Open the AssemblyConstraint03.CATProduct document.

1. Click the **Angle Constraint** icon:

2. Select the face to be constrained, that is the blue face as shown.

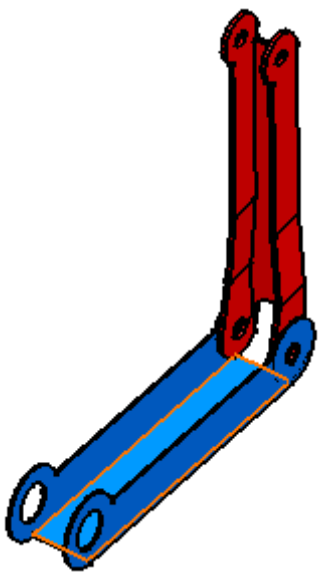

3. Select the second face to be constrained, that is the red face in the same direction of the blue face.

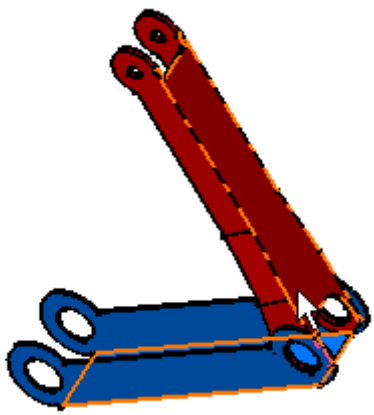

The Constraint Properties dialog box is displayed with the properties of the selected constraint and the list of available constraints:

- Perpendicularity
- Parallelism (you then need to define the orientation of the faces. You can choose between Undefined, Same, Opposite options)
- Angle
- Planar angle (an axis is to be selected. This axis must belong to both planes)

Note that when changing a **Same** orientation into an **Opposite** orientation or vice-versa, the application may sometimes positions the parts in an unexpected way especially if your system is under-constrained.

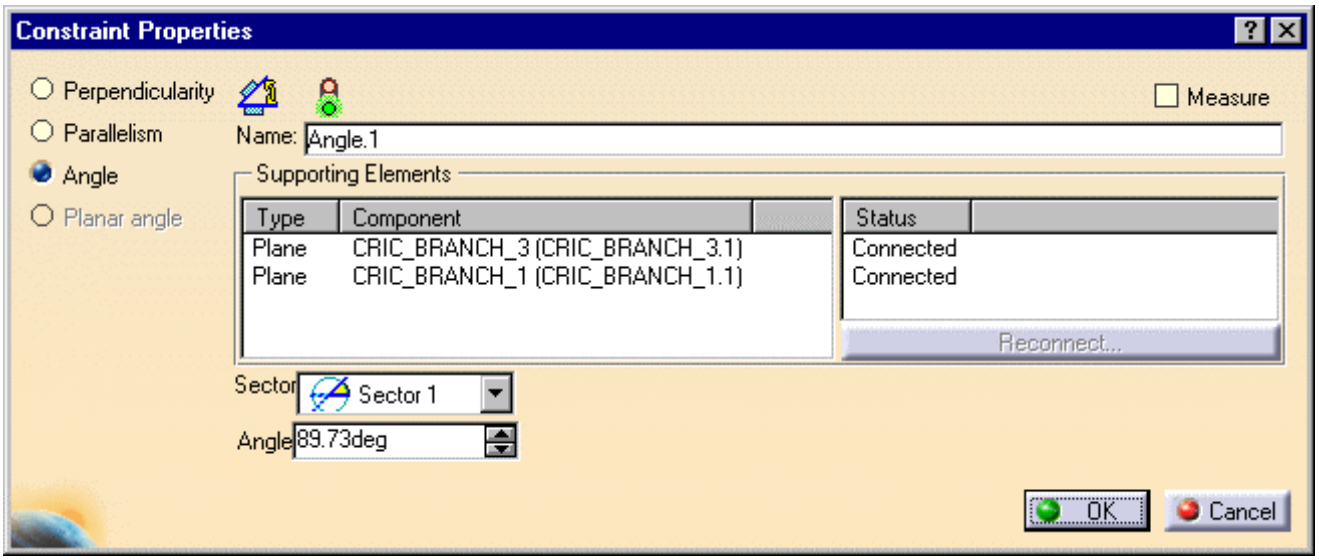

4. Keep the Angle option.

5. Enter 40 deg in the Angle field and keep Sector 1.

A **Sector** combo box appears only when you select two geometries for which the orientation can be defined (this rule excludes line or edge).
Four angle sectors are available:

	Direct Angle
	Angle + 180 deg
	180 deg - Angle
	360 deg - Angle

6. Click **OK** to create the angle constraint.

As the angle constraint is created, the red component is moved so as to adopt its new position. A green arrow is displayed in the geometry area to indicate that this constraint has been defined. The angle value is displayed too. This constraint is added to the specification tree too.

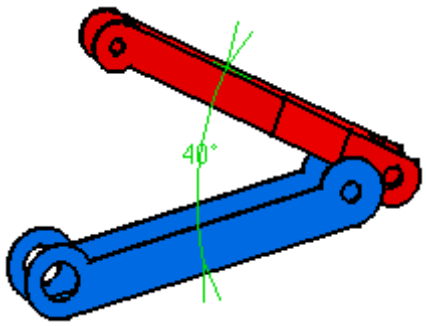

Graphic symbols used for constraints can be customized. For more information, refer to **Customizing Constraint Appearance**.

Fixing a Component

Fixing a component means preventing this component from moving from its parents during the update operation. There are two ways of fixing a component:

by fixing its position according to the geometrical origin of the assembly, which means setting an **absolute position**. This operation is referred to as "Fix in space".

by fixing its position according to other components, which means setting a **relative position.** This operation is referred to as "Fix".

This scenario first shows you how to fix a component in space, then how to fix it.

Before fixing the desired component, make sure it belongs to a component defined as active.

Open the Fix.CATProduct document.

1. Click the **Fix** icon:

Fix in Space

This command is also available from the Insert menu.

By default, the Fix command fixes components in space.

2. Select the component to be fixed, that is the light blue component.

The constraint is created. A green anchor is displayed in the geometry area to indicate that this constraint has been defined.

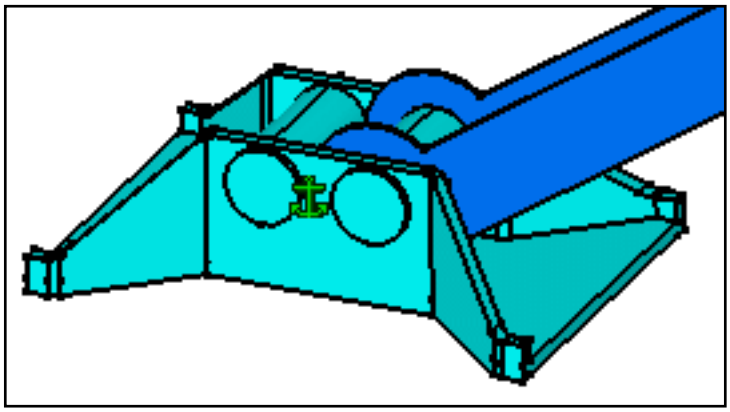

A lock symbol preceding the anchor is displayed in the specification tree too:

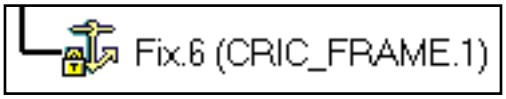

Graphic symbols used for constraints can be customized. For more information, refer to **Customizing Constraint Appearance**.

3. Move the fixed component using the compass.

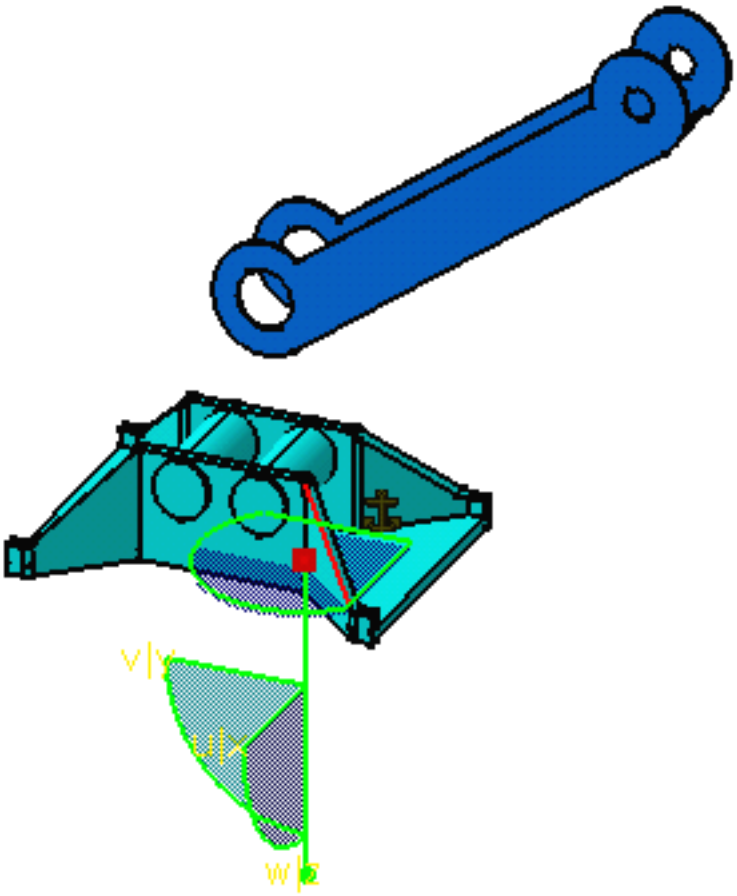

4. Update the assembly to see which component is moved: the fixed component returns to its previous location:

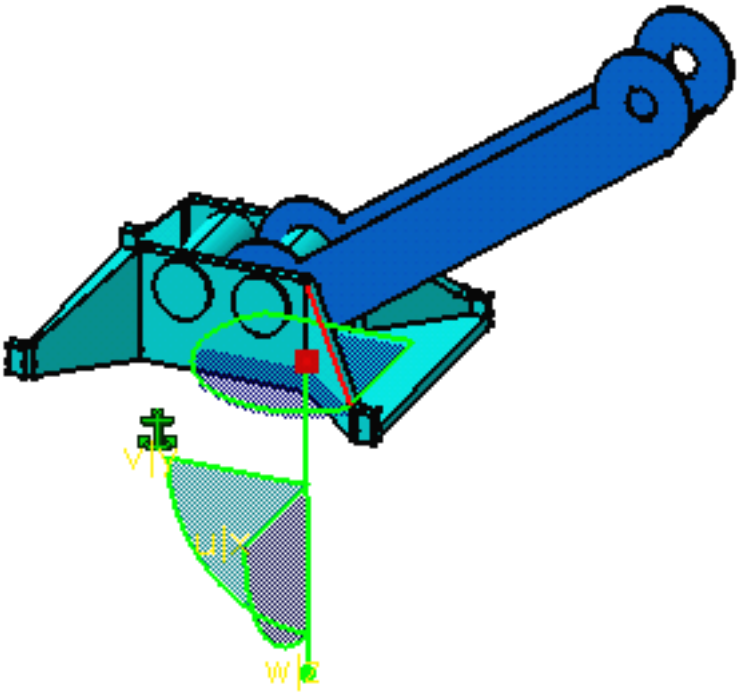

Fix

5. Double-click the fix constraint you have just created to edit it.
6. In the dialog box that appears, click More to expand the dialog box.
7. Uncheck the Fix in space option to the left of the dialog box. The lock symbol is no longer displayed in the specification tree, meaning that the component is positioned according to the other components only.
8. Move the fixed component using the compass.
9. Click OK to confirm.
10. Update the assembly: now the component remains at its location. Conversely, the dark blue component is moved to the fixed component.

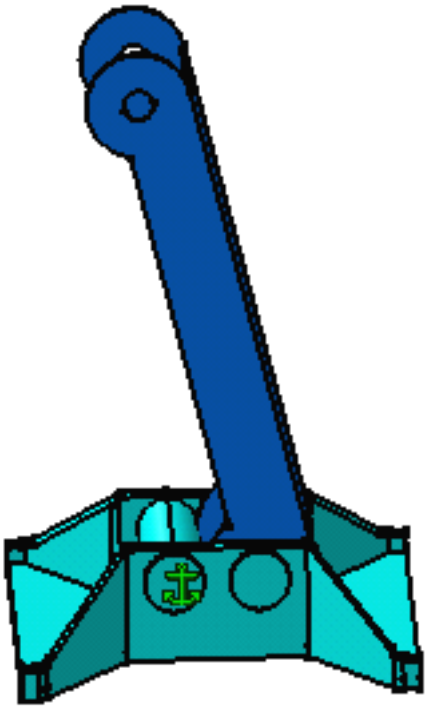

Fixing Components Together

This task consists in fixing two components together.

The Fix Together command attaches selected elements together. You can select as many components as you wish, but they must belong to the active component.

Open the Fix.CATProduct document.

1. Click the **Fix Together** icon:

   This command is also available from the Insert menu and works both in design and visualization mode.

2. Select CRIC_FRAME.

3. Select CRIC_BRANCH_3.

   You can select the components in the specification tree or in the geometry area.

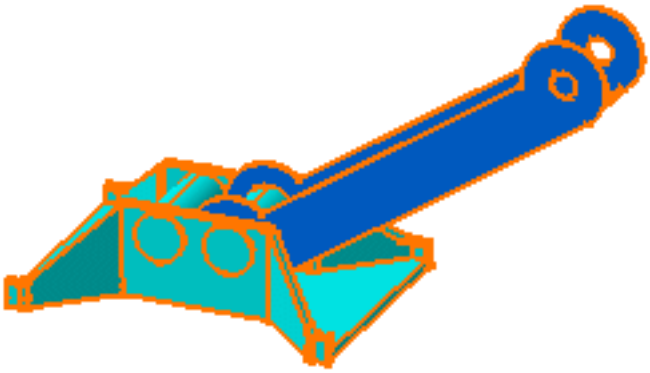

4. The Fix Together dialog box appears, displaying the list of selected components.

   To remove a component from the list, just click it.

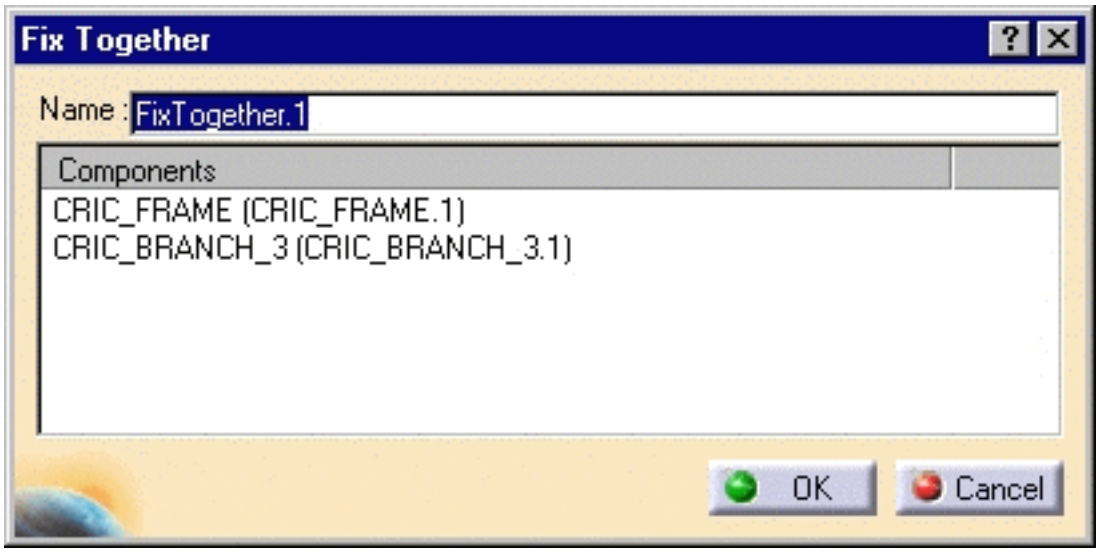

5. In the Name field, enter a new name for the group of components you want to create. For instance, enter FT1.

6. Click OK.

The components are attached to each other.

Note

Moving one of them (using the compass combined with the Shift key or using the option "With respect to constraints" in the **Manipulate** dialog box) moves the other one too.

The specification tree displays this operation.

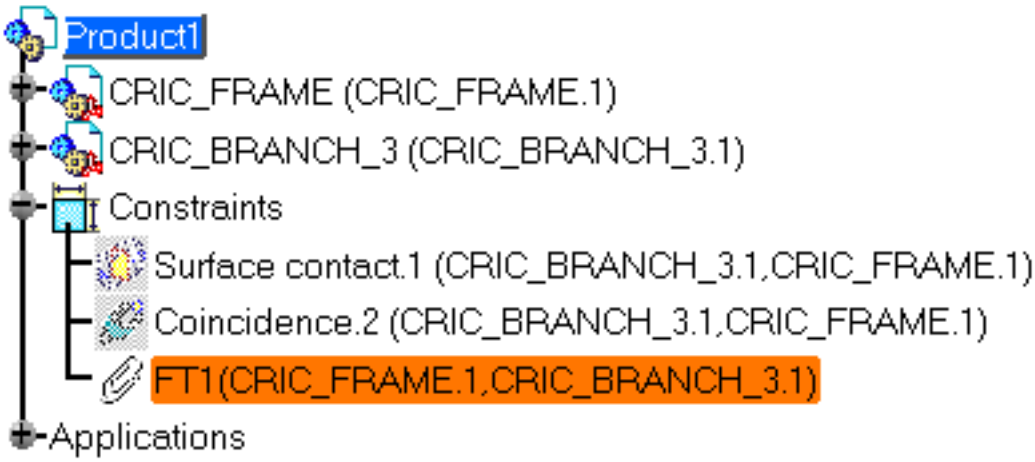

Because you can inadvertently move these components, the application displays the dialog box **Move Warning** to remind you that you are moving components fixed together. According to the selected options, **Move components involved in a Fix Together** option is affected.

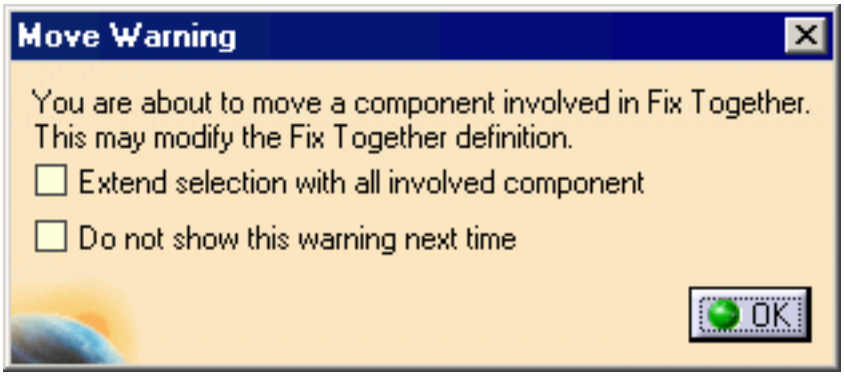

- If you check the **Extend selection with all involved component** option, these components will be move together as long as the option will be checked.
- If you check the **Do not show this warning next time** option, the dialog box will not be displayed and:
  - If the **Extend selection with all involved component** option is checked, the Move components involved in a Fix Together option is set to **Always**.
  - If the **Extend selection with all involved component** option is unchecked, the Move components involved in a Fix Together option is set to **Never**.
  - To display again this dialog box, check **Ask each time** option in Move components involved in a Fix Together.

A Few Notes about Fix Together

You can select a set of attached components to apply the Fix Together command between this set and other components.

You can set constraints between components belonging to a set of components fixed together.

If you set a constraint between a component and a set of attached components, the whole set is affected by the constraint.

You can deactivate or activate a set of attached components by using the Deactivate/Activate contextual command available in the specification tree. Red parentheses preceding the graphic symbol indicate deactivated sets.

Using the Quick Constraint Command

The Quick Constraint command creates the first possible constraint as specified in the priority list.

This task consists in using this command to create two constraints.

Open the QuickConstraint.CATProduct document.

1. Make sure the list specifying the order of constraint creation is composed as follows:

   1. Surface contact
   2. Coincidence
   3. Offset
   4. Angle
   5. Parallelism

   For more about this list, please refer to **Quick Constraint** option.

2. Double-click the **Quick Constraint** icon:

   Select the axis as shown.

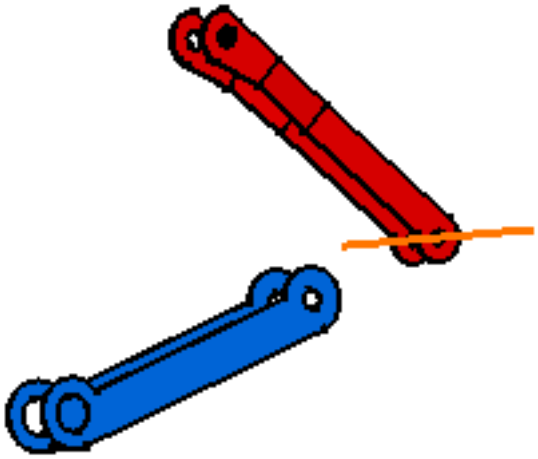

3. Select the axis of AXIS_BRANCH_3.

   As the application cannot set a surface contact due to the type of selected elements, it creates the second optional constraint mentioned in the list, that is a coincidence constraint.

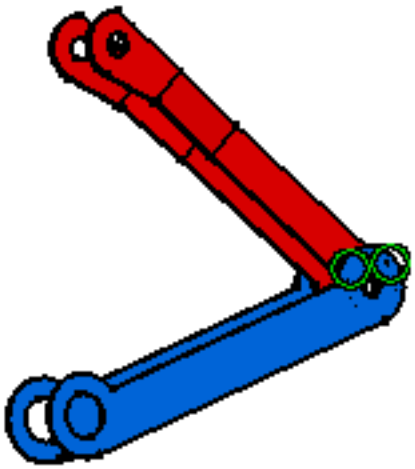

4. Now select the faces as shown:

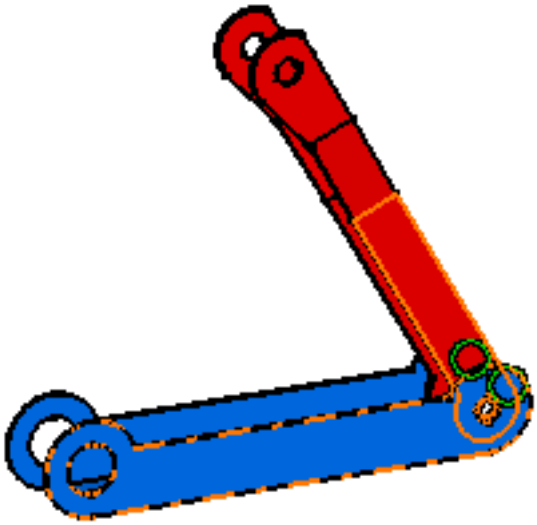

The first constraint in the list can now be set. A surface contact constraint is created.

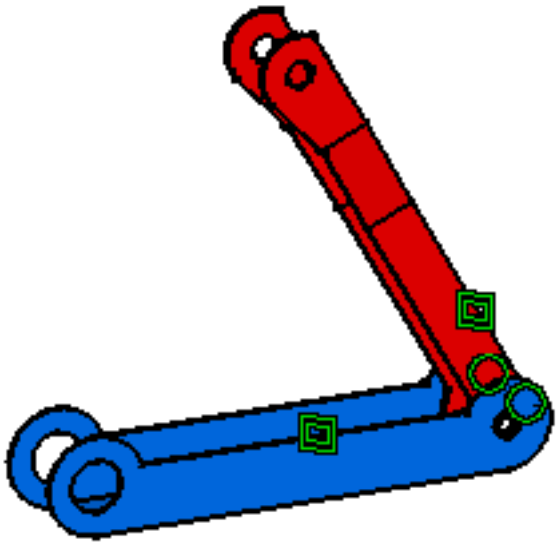

Graphic symbols used for constraints can be customized. For more information, refer to **Customizing Constraint Appearance**.

Changing Constraints

Changing a constraint means replacing the type of this constraint by another type. This operation is possible depending on the supporting elements. You can select any constraints, not necessarily in the active component.

This task consists in changing the parallelism constraint into an offset constraint.

Open the AssemblyConstraint05.CATProduct document.

1. Select the constraint to be changed.

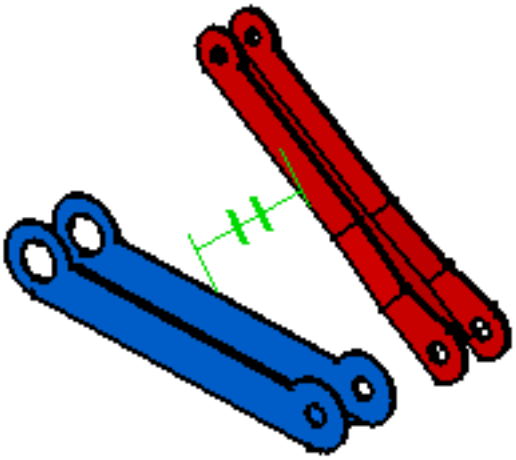

2. Click the **Change Constraint** icon:

The Change Type dialog box that appears, displays all possible constraints.

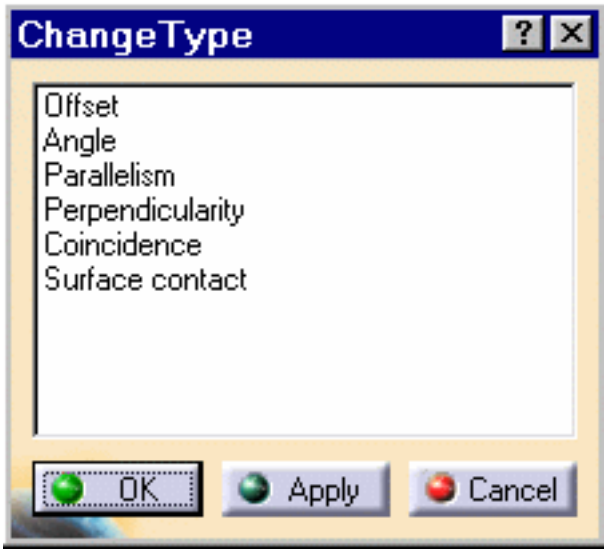

3. Select the new type of constraint. For the purposes of our scenario, select Offset.
4. Click Apply to preview the constraint in the specification tree and the geometry.

5. Click OK to validate the operation.

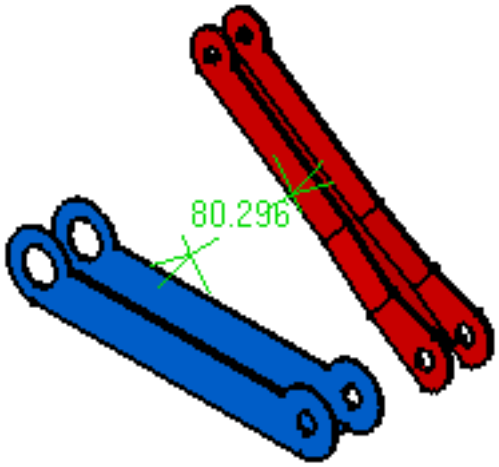

Deactivating or Activating Constraints

Deactivating or activating constraints means specifying if these constraints must be taken into account during updates or not. This task consists in deactivating then activating a constraint.

Open the AnalyzingAssembly04.CATProduct document and make sure the Design Mode is on.

1. Right-click the **Coincidence.3** constraint and select the **Deactivate** command from the contextual menu.

   The constraint is deactivated.
   The mask representing a deactivated constraint appears with red parentheses, on the constraint's icon in the specification tree.

   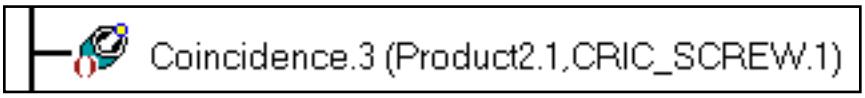

   The deactivated constraint is now displayed in white in the geometry window.

   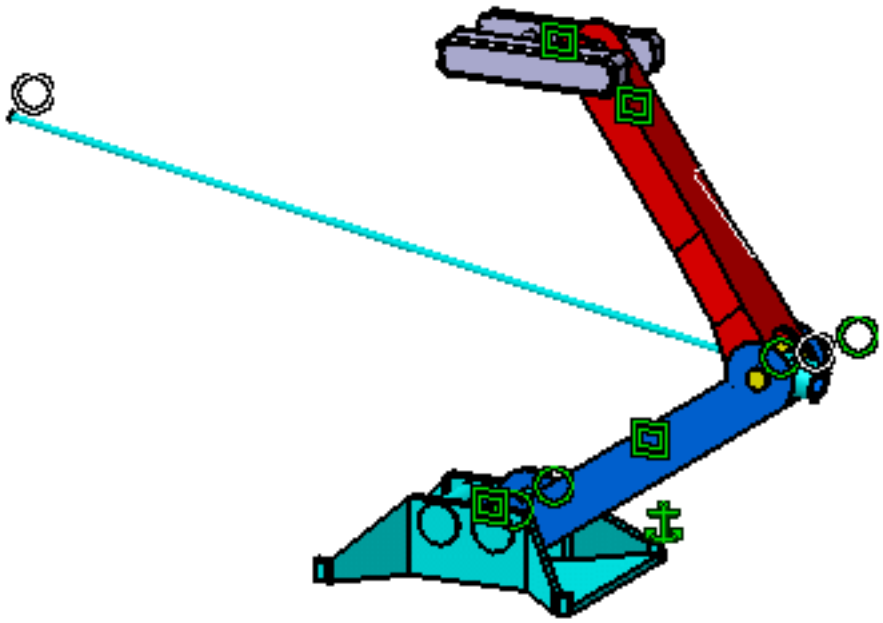

2. Right-click the **Coincidence.3** constraint and select the **Activate** command from the contextual menu.

Selecting the Constraints of Given Components

This task consists in selecting all the constraints defined for a component.
You can only select child components of the active component.
The Component Constraints command allows you to select the constraints linked to one or more selected components. These components are child components of the active component.

Open the Assembly_01.CATProduct document, use the Show capability if the constraints are not visible, and ensure the design mode is on.

1. Select the component whose constraints are to be selected. Multi-selection is also possible.

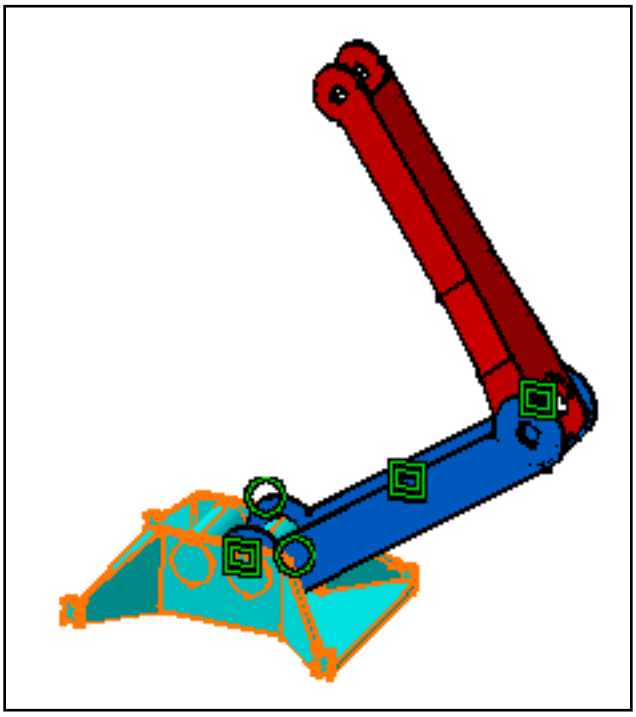

2. Right-click and select **CRIC_FRAME.1 object -> Component Constraints** command from the contextual menu.

The application highlights two constraints, both in the specification tree and the geometry area.

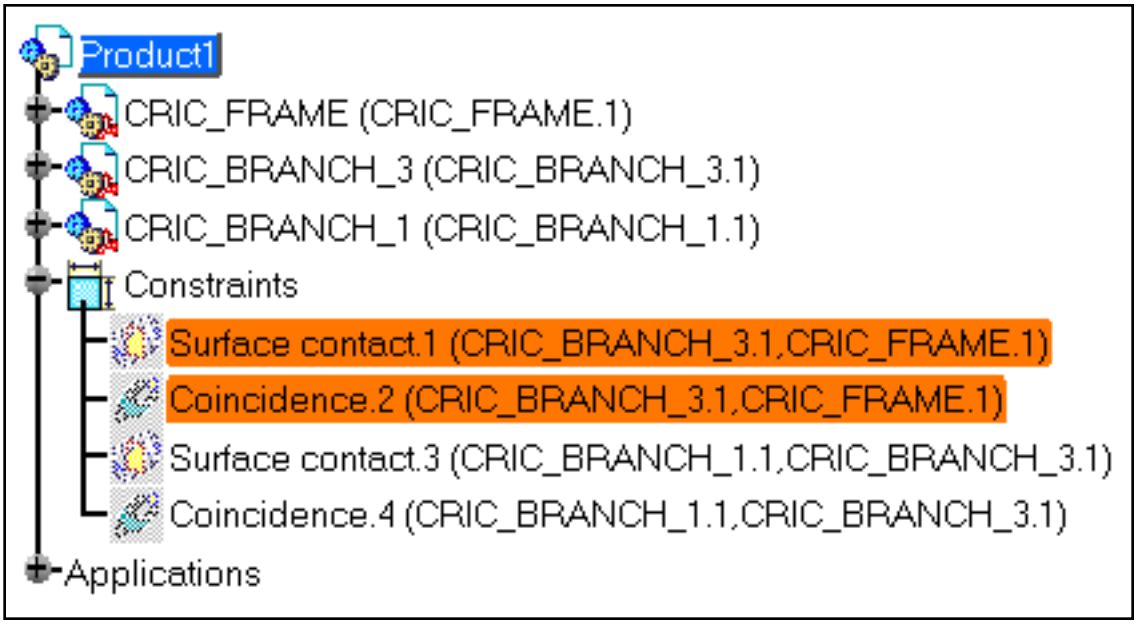
Product1
CRIC_FRAME (CRIC_FRAME.1)
CRIC_BRANCH_3 (CRIC_BRANCH_3.1)
CRIC_BRANCH_1 (CRIC_BRANCH_1.1)
Constraints
Surface contact.1 (CRIC_BRANCH_3.1,CRIC_FRAME.1)
Coincidence.2 (CRIC_BRANCH_3.1,CRIC_FRAME.1)
Surface contact.3 (CRIC_BRANCH_1.1,CRIC_BRANCH_3.1)
Coincidence.4 (CRIC_BRANCH_1.1,CRIC_BRANCH_3.1)
Applications

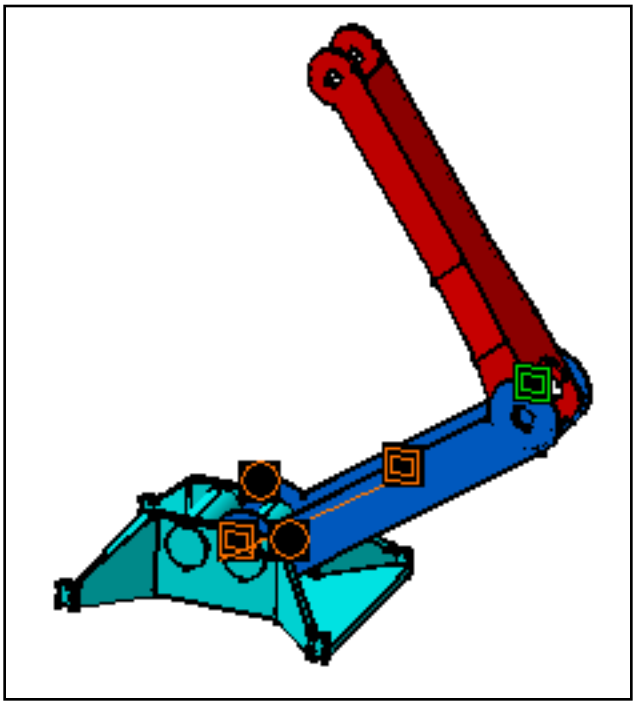

Editing Constraints

This task explain how to edit constraints.

When you are editing a constraint, you can:

- Rename the constraint.
- Change the referenced geometries.
- Modify its options.

The **Copy**/**Cut**/**Paste** commands are available for valuated constraints only. In this case, only the constraint's value, for the same type of constraint offset or angle, can be pasted. Concerning the **Cut** command, it deletes the constraint and copy its value.

Open the Assembly_01.CATProduct document.

1. Double-click the **Surface contact.3** constraint.

   The **Constraint Definition** dialog box appears.

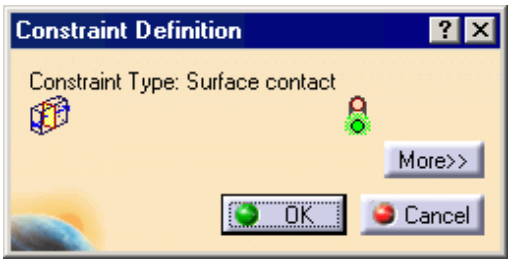

2. Click the **More>>** button to expand the dialog box.

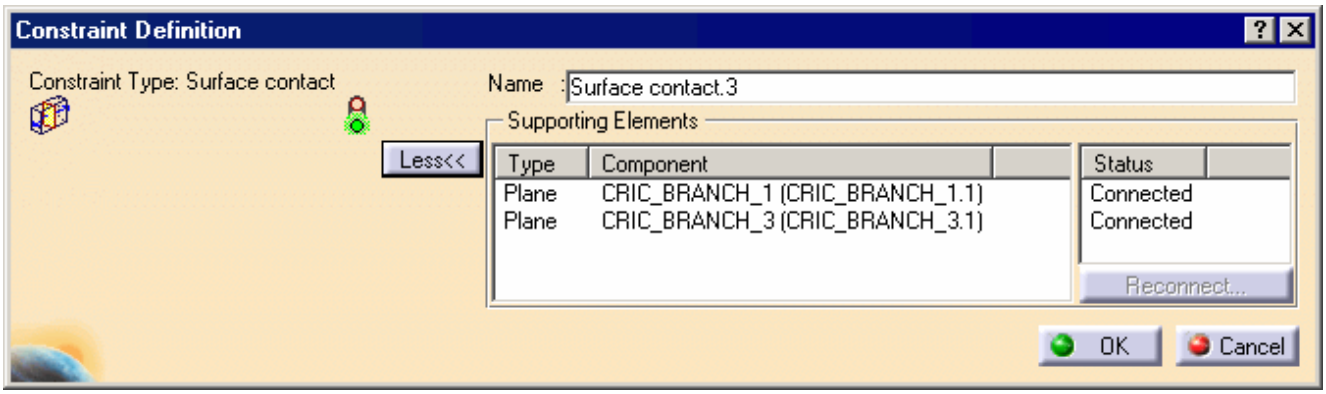

The traffic light displays the constraint's status:

- verified.
- impossible.
- not updated.
- broken.

Two contextual commands improving display are available in the **Supporting Elements** field:

- **Reframe on** views the constraint of the selected component at the center of the geometry window.
- **Center Graph** zooms in the selected component in the specification tree.

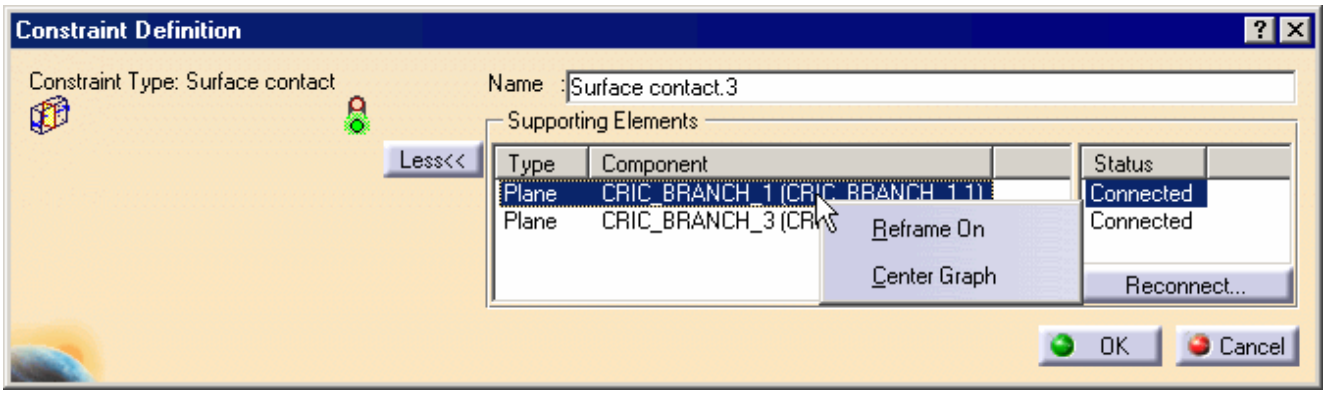

Constraints and Object in Work

When you are setting constraints and designing part in the assembly at the same time, it is possible that you are modifying the referenced geometries of the constraints. In other words, the geometry of the current feature does not contain the original geometry referenced by the constraint. In fact, the constraint references the original geometry which already exists in the history but not for the current object in work. In this case, the application cannot highlighted the geometry or the constraint seems to be wrong.
This can happen for Sheet Metal Design features or when you add a transformation feature in Part Design context for example after the constraint's creation.

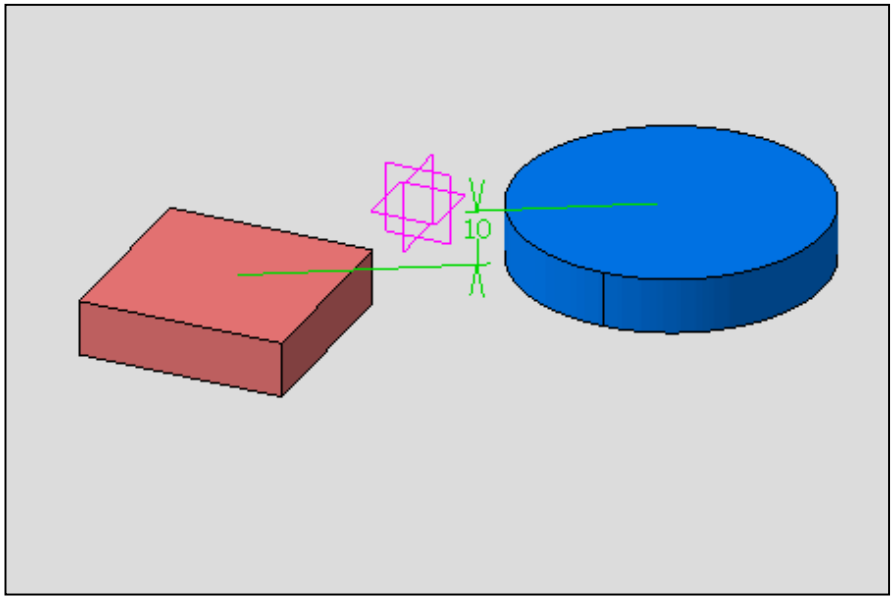

The body or the brick-red part has been translated using the translate transformation feature of Part Design, note that its magenta axis system has not been moved. The constraint is already verified although one of its referenced geometry has been moved.

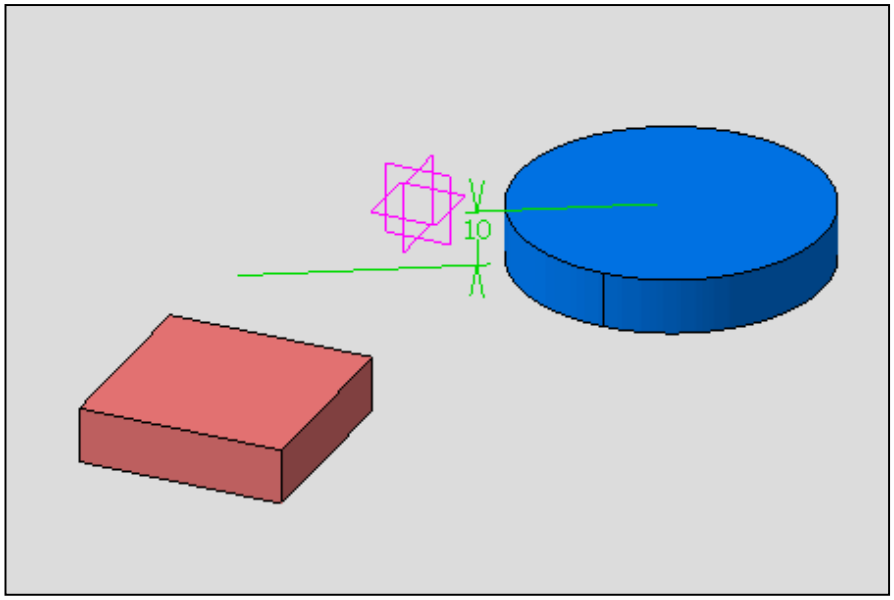

Updating One Constraint Only

When you need to update your constraints, either you update all the constraints of the active component or update one or more constraints of the active component.

By default, constraints needing an update are displayed in black. To redefine the colors of the constraints, please refer to **Customizing Constraint Appearance**.

This task consists in updating the constraints you explicitly specify.

1. Right-click the constraint to be updated.

   Constraints needing an update are displayed with specific graphic properties. The Properties dialog box indicates too if constraints need updates or not. For more information, please refer to Modifying the Properties of a Constraint.

   You can select the constraint in the specification tree or in the geometry.

2. Select **Update** from the contextual menu.

   The selected constraint is updated.

3. Click the second constraint to be updated.

4. Control-right-click the third constraint to be updated.

5. Select the **Update** contextual command.

   The two selected constraints are updated too. Remember, valid constraints are green by default.

90

Modifying the Properties of a Constraint

This task consists in modifying the mechanical properties and attributes of a constraint.

Open the AssemblyConstraint02.CATProduct document and create an offset constraint.

1. Right-click the offset constraint to be modified.

   You can select the constraint in the specification tree or in the geometry.

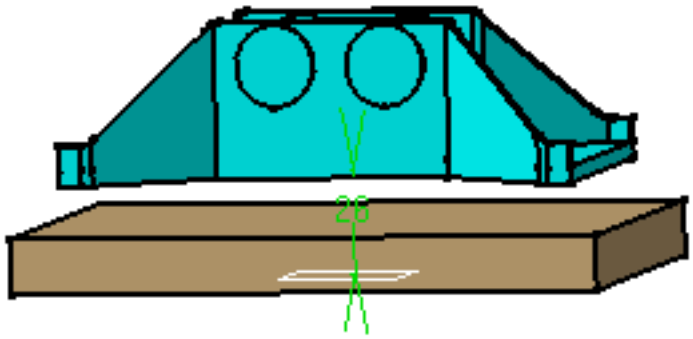

2. Select **Properties** from the contextual menu.

   The Properties dialog box that appears displays four tabs.

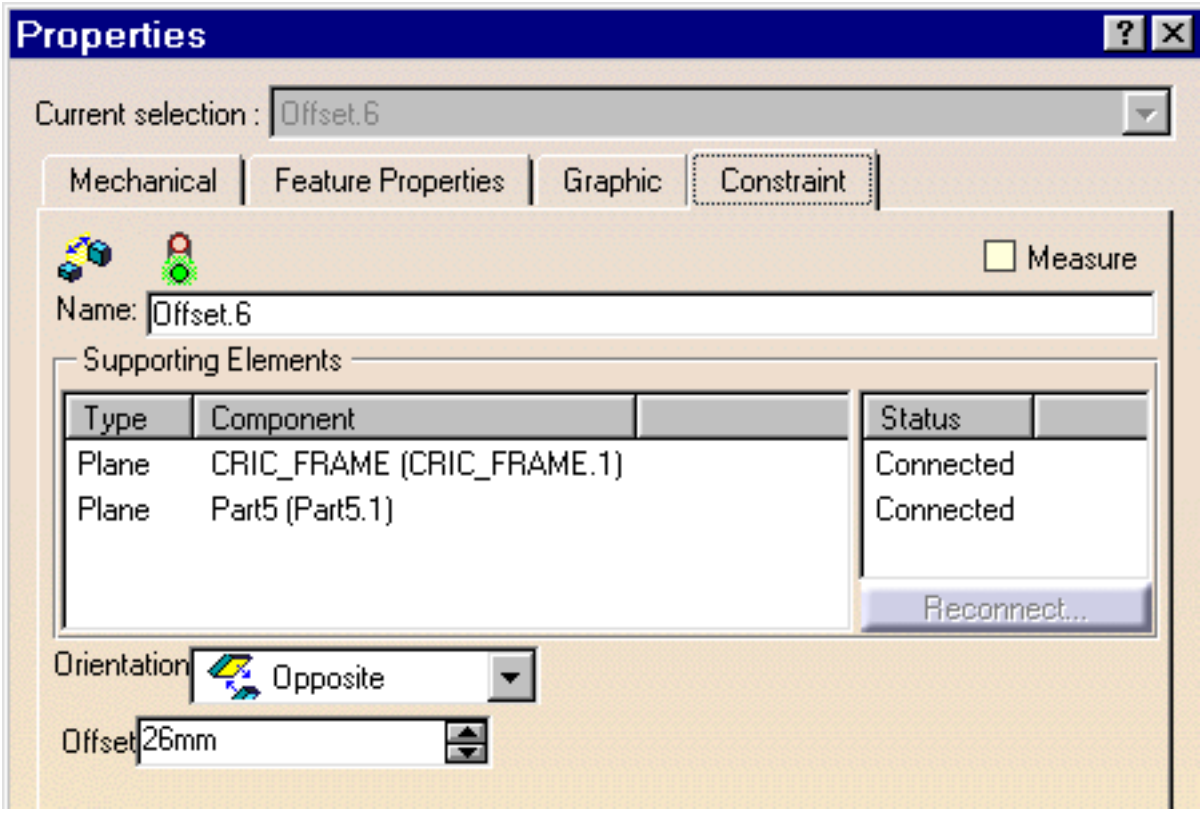

Constraint tab

The **Constraint** tab displays the name of the constraint as well as the name and type of the supporting components. You can rename the constraint if desired.

The constraint status is also indicated. In our scenario, the constraint is connected. To find out how to reconnect broken or misconnected constraints.

3. Enter a new value in the **Offset** field. For example, enter 75 **mm**.

4. Set the Orientation option to Same so as to reverse the blue component.

Instead of using the Properties contextual command to edit the properties as described above, you can double-click the constraint to be edited to display the related dialog box: in which you can modify the same properties:

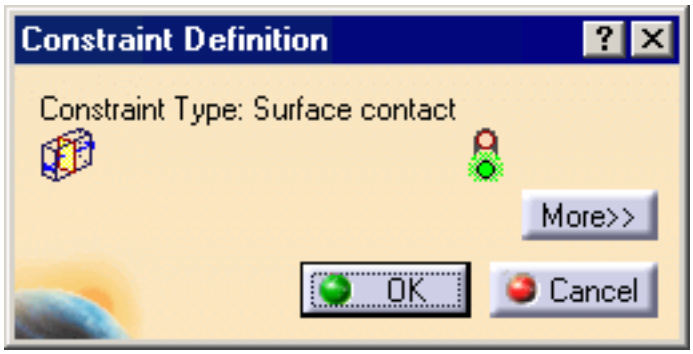

Mechanical tab

5. Click the Mechanical tab.

6.

Three attributes characterize constraints:

Deactivated: deactivated constraints are not taken into account when updating the assembly
To update: the constraint does not reflect the latest changes to the assembly
Unresolved: the application detects problems

7. Check Deactivated.

The constraint is modified accordingly.

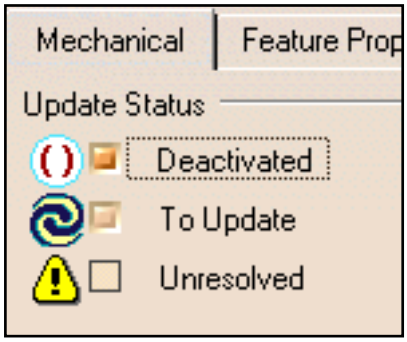

Note that parentheses precede the constraint value, indicating that the constraint is deactivated. These parentheses precede the name of the constraint in the specification tree too. The color of the graphic symbol is modified.

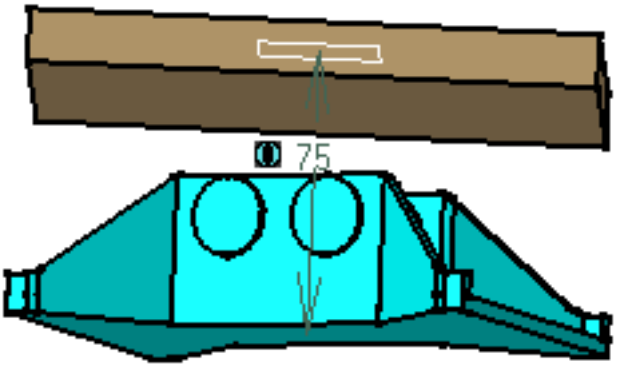

Feature Properties tab

8. Click the Feature Properties tab.

This tab displays the constraint's name as well as its creation and last modification date. You can edit the constraint's name.

Graphic tab

9. Click the Graphic tab.

The Graphic tab lets you define the graphic properties of your constraint.

Color
Line type (Dotted, Small dotted etc.)
Thickness (Different values)

Select the color of your choice from the list. You can also define your own colors by selecting the More Colors... command at the bottom of the list. To know more about defining personal colors, please refer to Infrastructure User's Guide.

You cannot define a new color for deactivated constraints. For the purposes of our scenario, you need to reactivate the constraint.

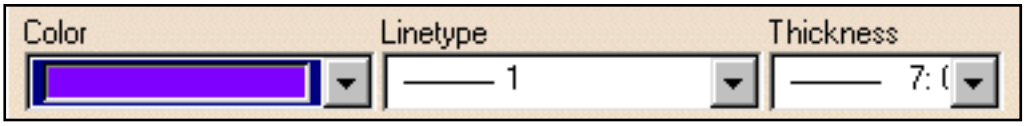

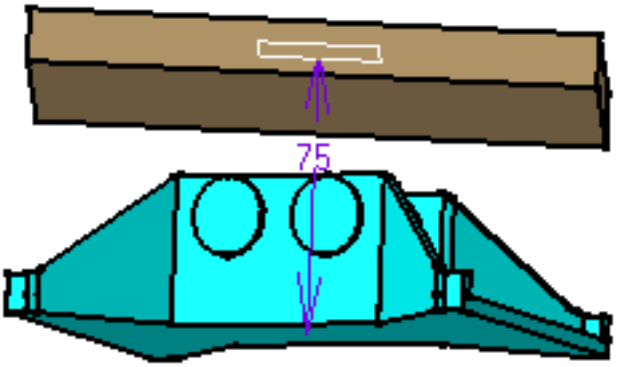

If you wish to change the color for a given status (resolved, unresolved, over-contrained, invalid geometry) use the Tools -> Options command. For more, see **Customizing Constraint Appearance**.

Setting a Constraint Creation Mode

This task shows you how to set one of the three modes available to create constraints. These modes are:

- Default mode
- Chain mode
- Stack mode

Open the Constraint_Creation.CATProduct document.

Default mode

1. Click the **Default Mode** icon:

   This mode lets you create as many constraints as you wish by explicitly selecting two geometrical elements. In our example, you can set an offset constraint between the highlighted face and the face of another geometrical element. For the purposes of this scenario, double-click the offset constraint icon to make it permanently active.

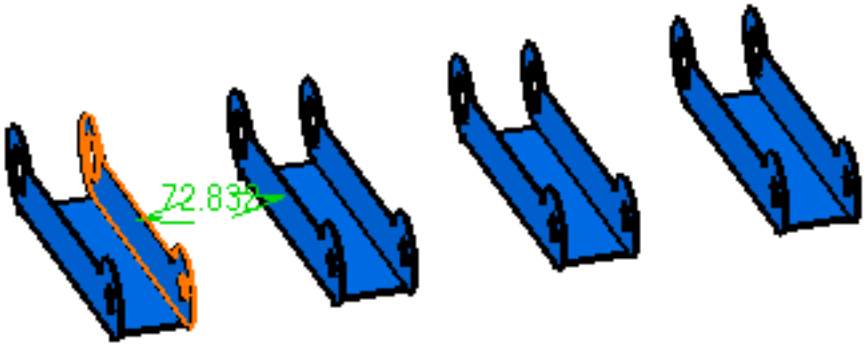

   The offset constraint icon still active, you can then set another offset constraint between two other faces.

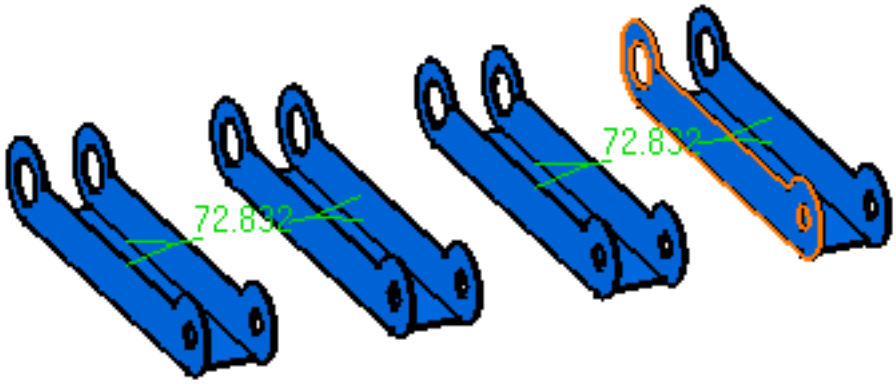

2. For the purposes of our scenario, delete these constraints.

Chain mode

1. Click the **Chain Mode** icon:

   This mode lets you create as many constraints as you wish by always reusing the last face you selected.

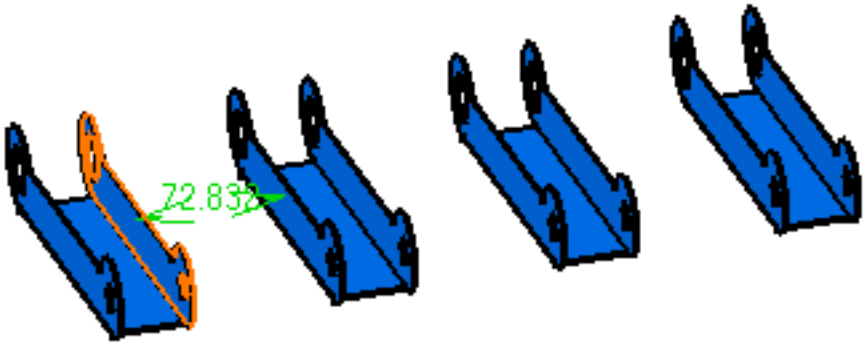

2. The offset constraint icon still active, you can then set another offset constraint between the second face you selected and any other face.

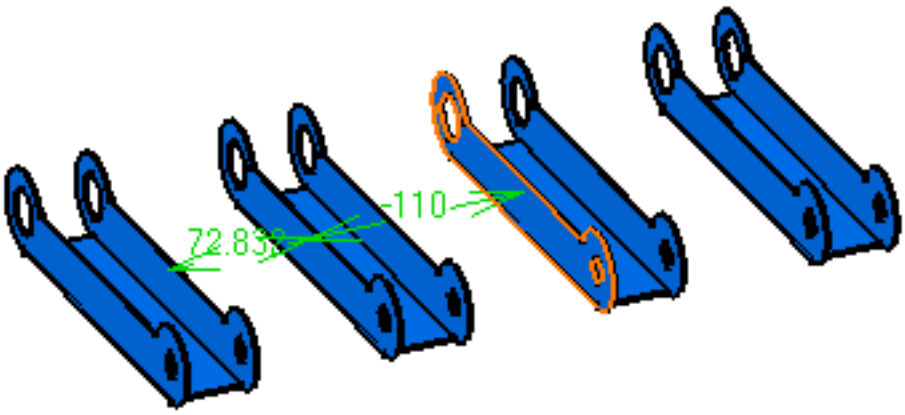

3. The offset constraint icon still active, you can then set another offset constraint between the third face you selected and any other face.

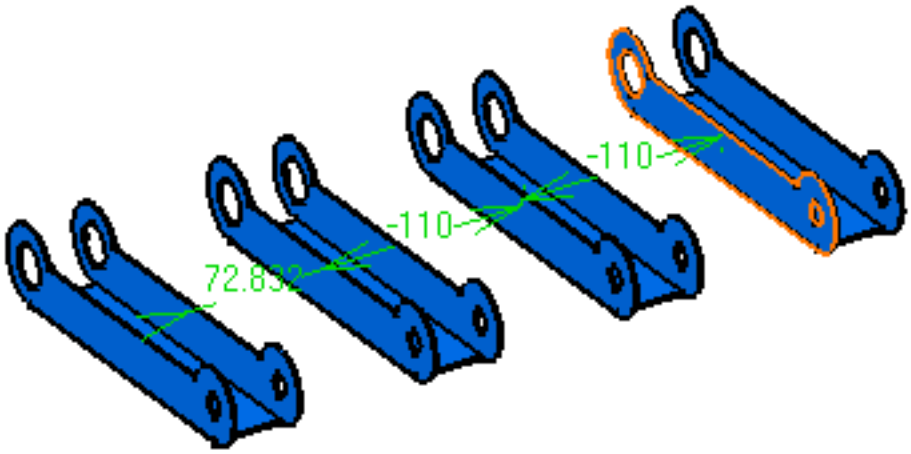

And so on...

4. For the purposes of our scenario, delete these constraints.

Stack mode

1. Click the **Stack Mode** icon:

This mode lets you create as many constraints as you wish by reusing the very first face you selected to create the first constraint.

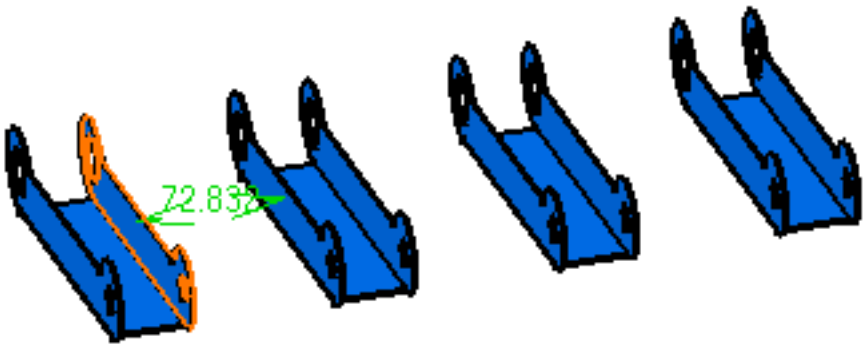

2. The offset constraint icon still active, you can then set another offset constraint between the first face you selected and any other face.

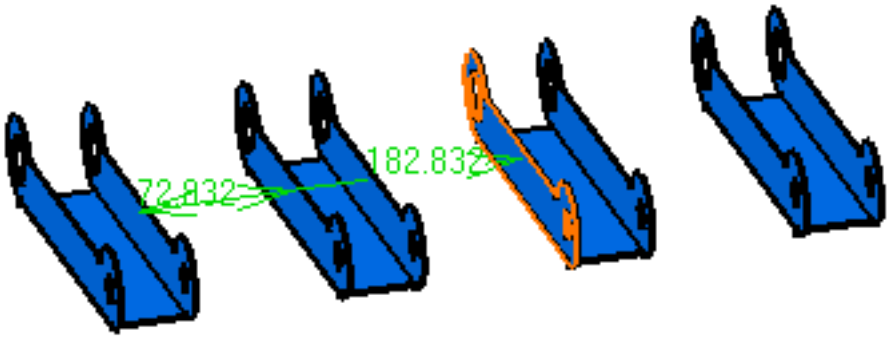

3. The offset constraint icon still active, you can then set another offset constraint between the first face you selected and any other face.

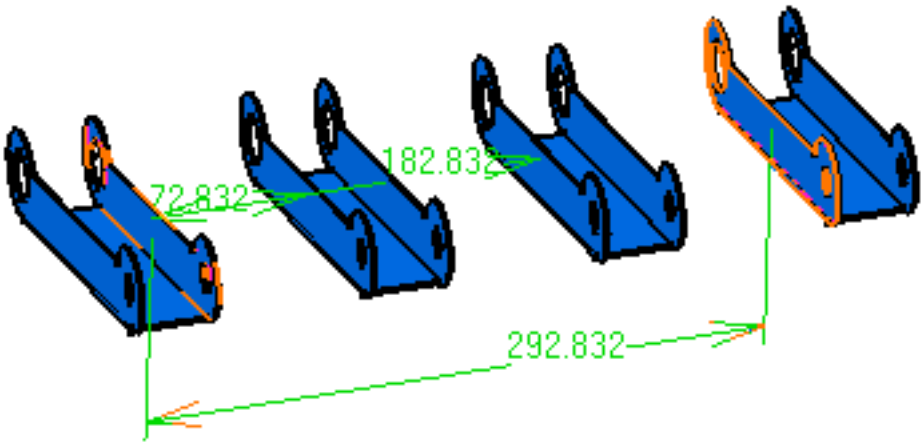

4. And so on...

Inconsistent or Over-constrained Assemblies

This task shows you what happens when the application detects an over-constrained assembly.

Open the AssemblyConstraint02.CATProduct document.

1. Create the offset constraints as shown below:

- top face of Part5 and bottom face of CRIC_FRAME
- top face of Part5 and top face of CRIC_FRAME

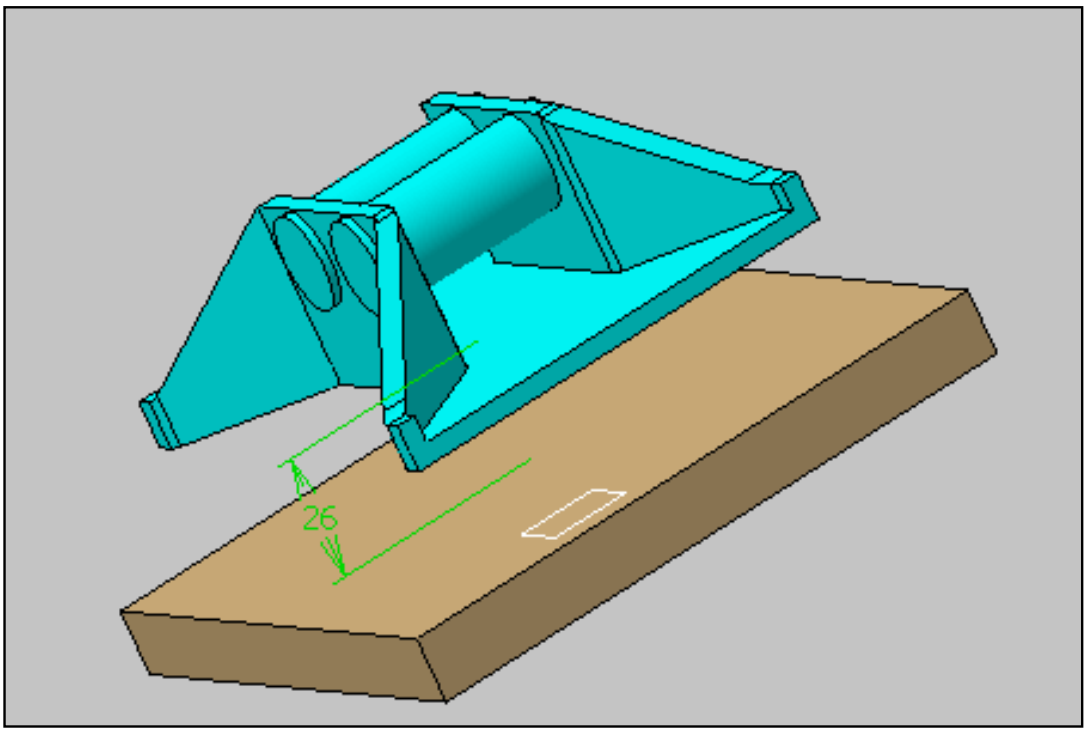

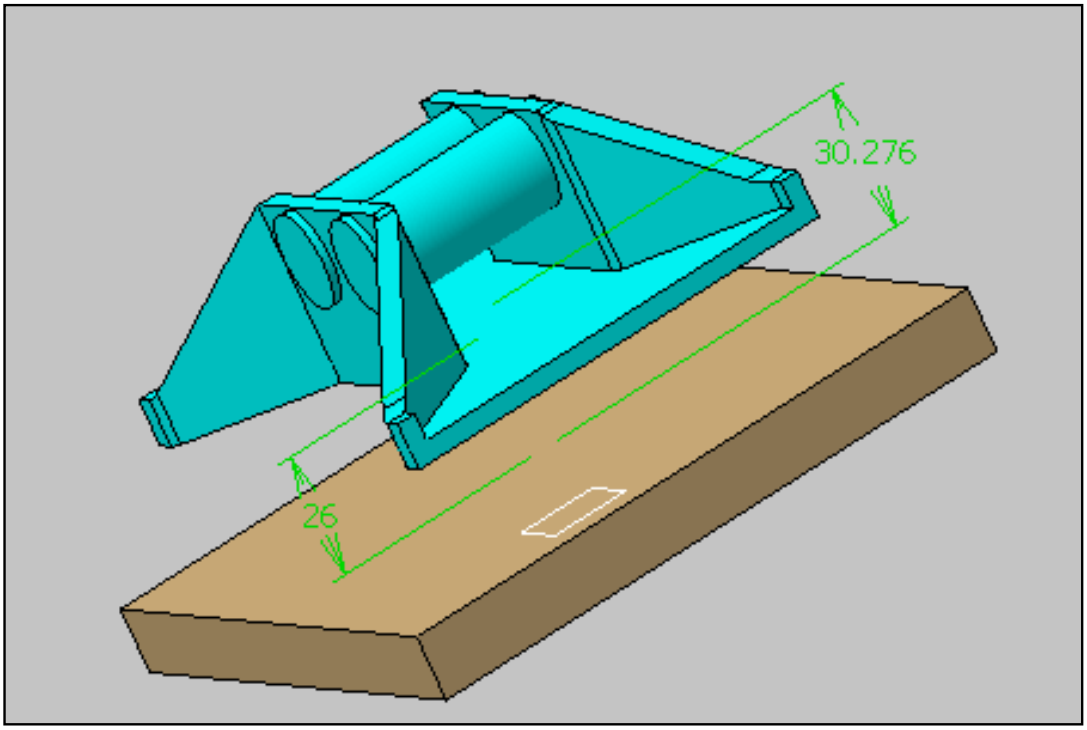

The two constraints are green colored because they are consistent. There is any overconstraint, their values respect the position of the two parts.

2. Set the value of **Offset.7** constraint to 45.

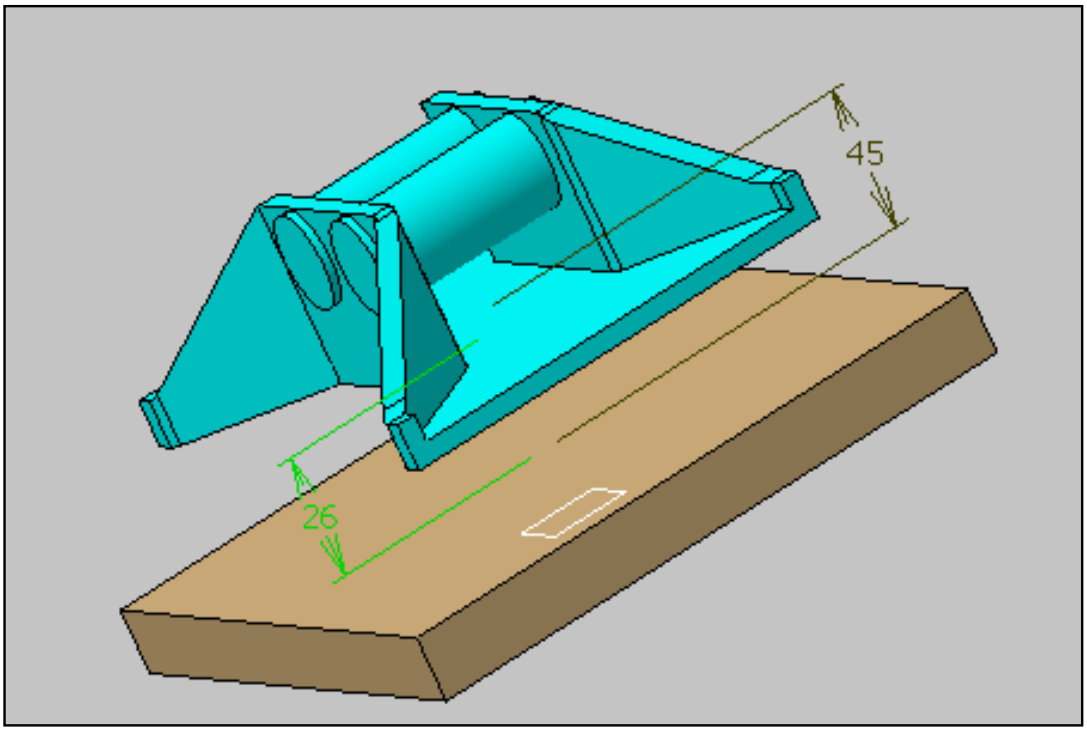

3. Update the assembly if you are in manual update.

The update operation detects difficulties to obtain a valid constrained system: the **Update Diagnosis** dialog box appears providing the diagnosis of the problem.

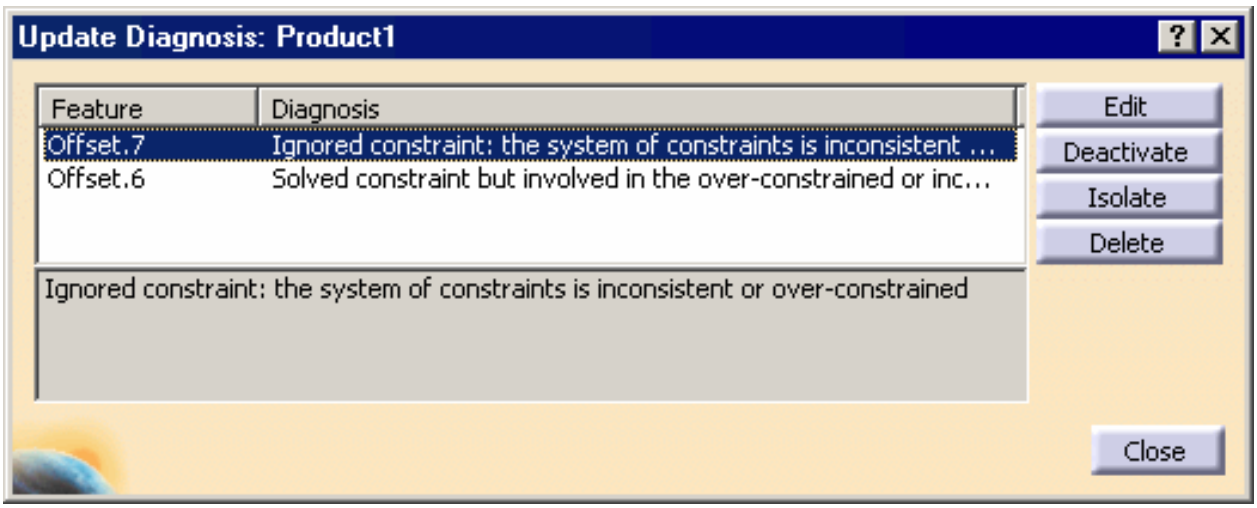

The constraints involved in the inconsistent or over-constrained system are displayed.
The application indicates:

- The constraint causing trouble: **Offset.7**
- Constraint **Offset.6**, which is valid but involved in the inconsistent or over-constrained system .

To resolve the problem, you can edit, deactivate, isolate or delete the desired constraint.

4. Select **Offset.6**, click the **Deactivate** button and click **Close**.

5. Close the dialog box, update the assembly if needed.

The assembly is now consistent.

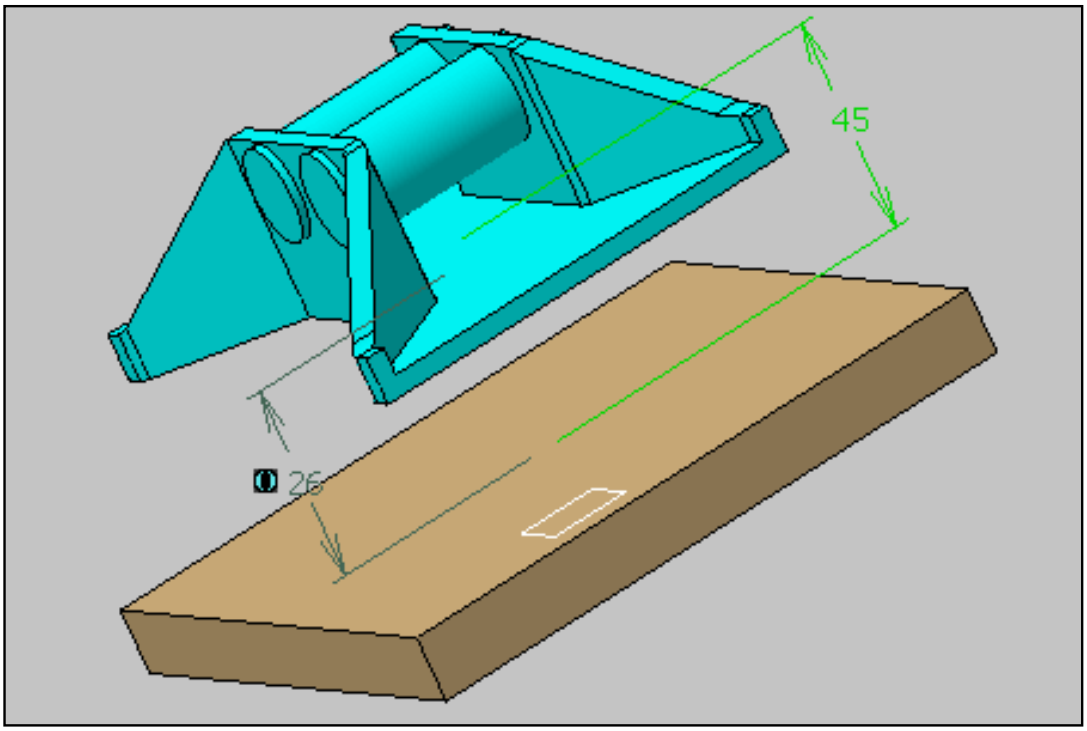

Searching for URLs Associated with Constraints

This task shows you how to check that a constraint has been assigned URLs (Universal Resource Locators), then how to search for a given URL.

Open the Moving_Components_02 document that contains URLs created in the **Knowledge Advisor** workbench.

1. Click the **Comment and URLs** icon:

   The URLs and Comment dialog box is displayed.

2. Select the constraint "Surface contact.18".

   The URL field indicates that this constraint has been assigned two URLs: "Dassault Systèmes" and "Delmia".

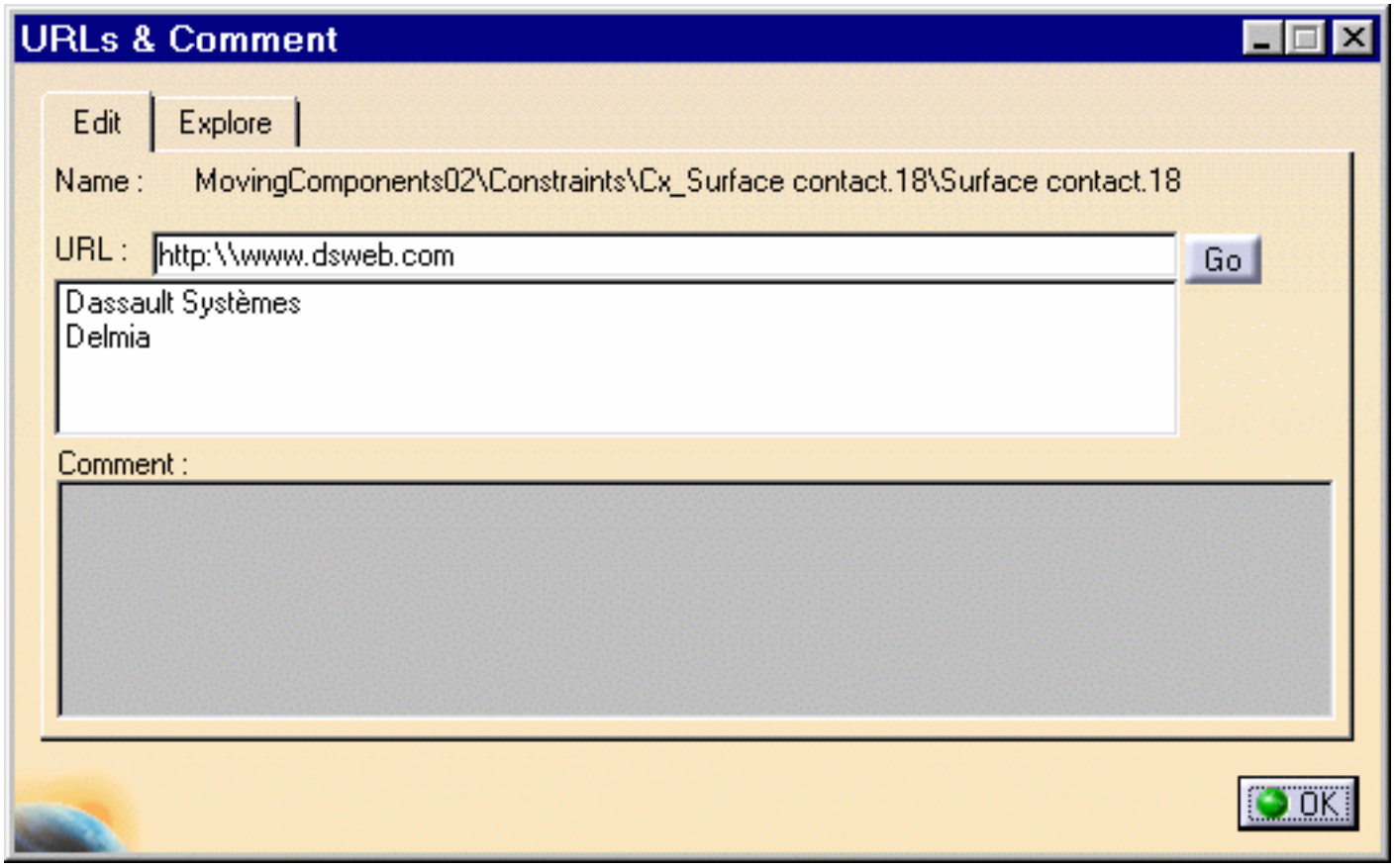

3. Click "Delmia".

   The associated URL is displayed in the URL field.

   You just need to click the Go button to access the corresponding web site.

Searching for a URL

4. Click the Explore tab.

   The list of all the URLs assigned to all the constraints defined in this CATProduct document is displayed.

5. Enter the name of the URL to be searched for in the Search field. For example, enter "Delmia".

6. Click Search.

   If the specified URL is found, "yes" is displayed in the Found column. In the Edit tab, the URL is highlighted.

Name	Summary	Found
MovingComponents02\Constraints\Cx_Coincidence.17\Coincidence.17	1 url	
MovingComponents02\Constraints\Cx_Surface contact.18\Surface contact.18	2 url	yes

Reordering Constraints in the Specification Tree

This task shows you how to modify the location of assembly constraints in the specification tree to classify them the way you want. The application lets you reorder constraints but also gather them in sets.
You can perform these operations within the Constraints node:

- Reordering Constraints
- Gathering Constraints in a Set
- Creating a Set Before Gathering Constraints
- Handling Sets

- You can move all types of constraints. What is more, the application does not take their status into account: if they are deactivated or even broken, you can relocate them.
- Whatever operation you perform for modifying their locations in the tree, it never affects the geometry of your assembly.
- You cannot create a set of constraints in a flexible assembly. If you make a rigid sub-assembly as flexible, set of constraints will be removed.

Open the AnalyzingAssembly02 CATProduct document.

Reordering Constraints

1. Select **Coincidence.4** as the constraint to be moved and right-click the **Coincidence.4 object-> Reorder constraints** contextual command.

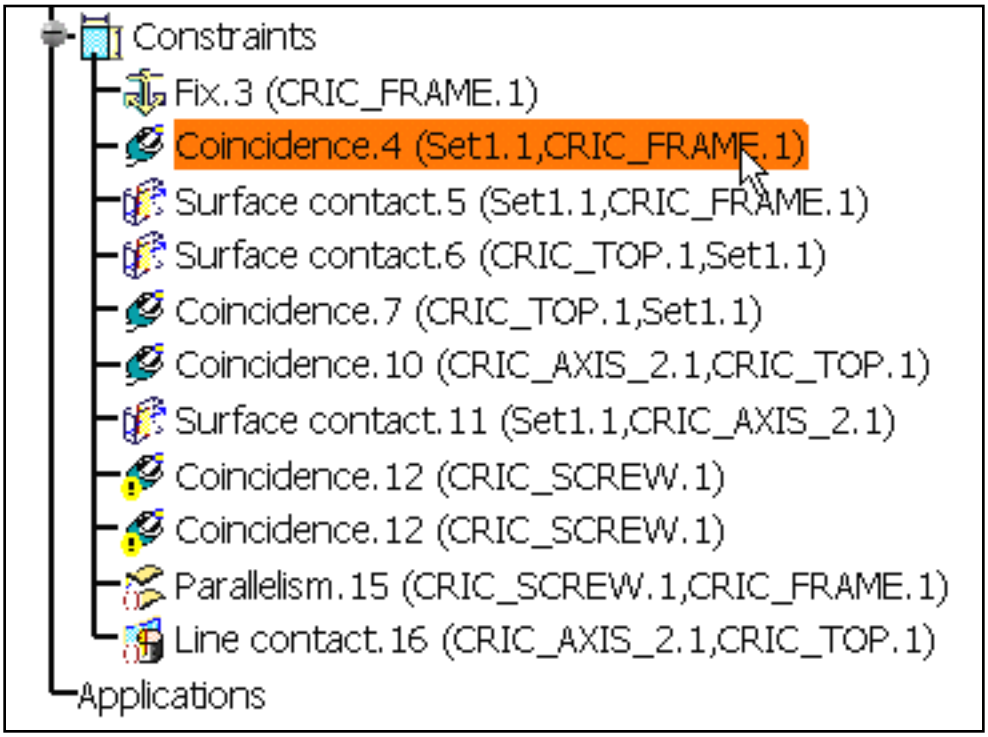

2. Select **Coincidence.10** as the constraint below which **Coincidence.4** is to be located.

Coincidence.4 has been moved.

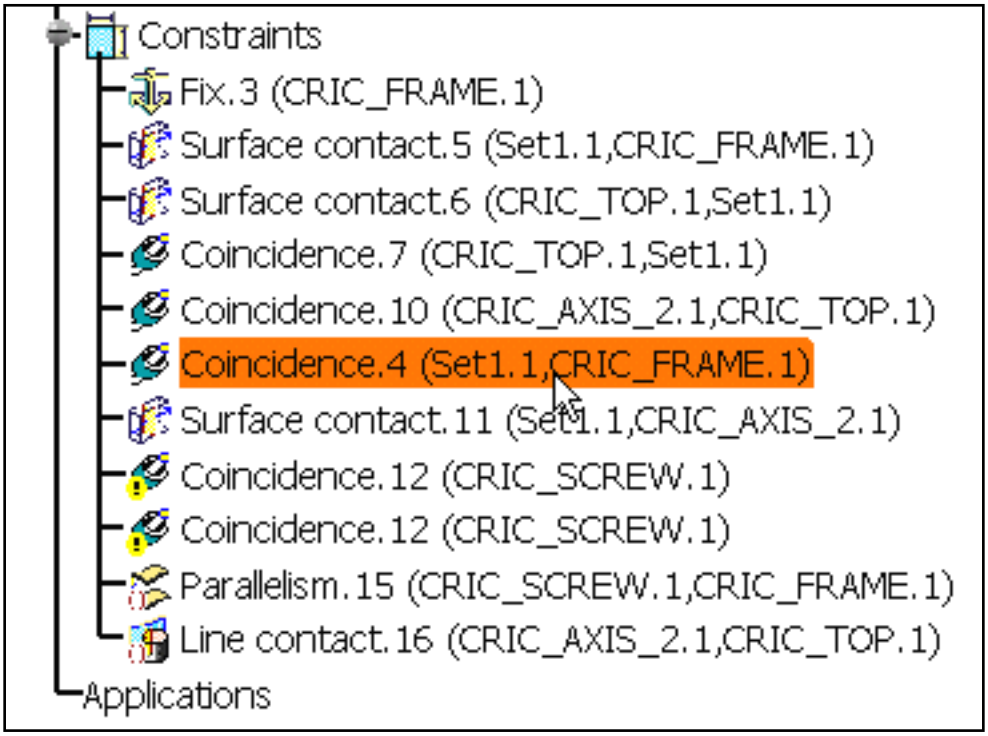

Gathering Constraints in a Set

3. To group **Surface contact.5** and **Surface contact.6** constraints, multi-select them and use the **Selected objects -> Group in new set** contextual command.

   The application has created **Set.1** containing both surface constraints.

4. Select **Set.1** and right-click to use the **Properties** contextual command.

5. In the **Properties** dialog box that appears, rename **Set.1** as **Surface Contact Constraints** in the **Feature Name** field of the **Feature Properties** tab.

6. Expand this node.

   You must obtain this:

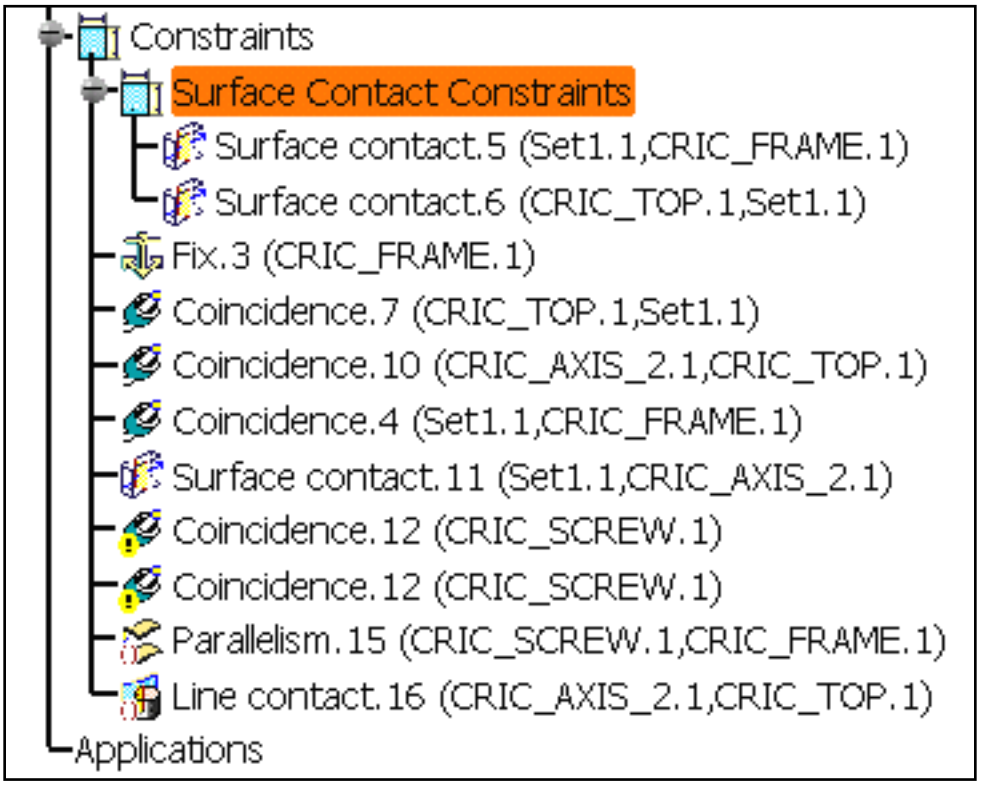

Creating a Set Before Gathering Constraints

7. Select the node **Constraints** and right-click to use the **Constraints object->Add Set** contextual command.

A new set, **Set.2**, appears in the tree, at the same level as 'Surface Contact Constraints' set. It has been created at the first level of the Constraints node.

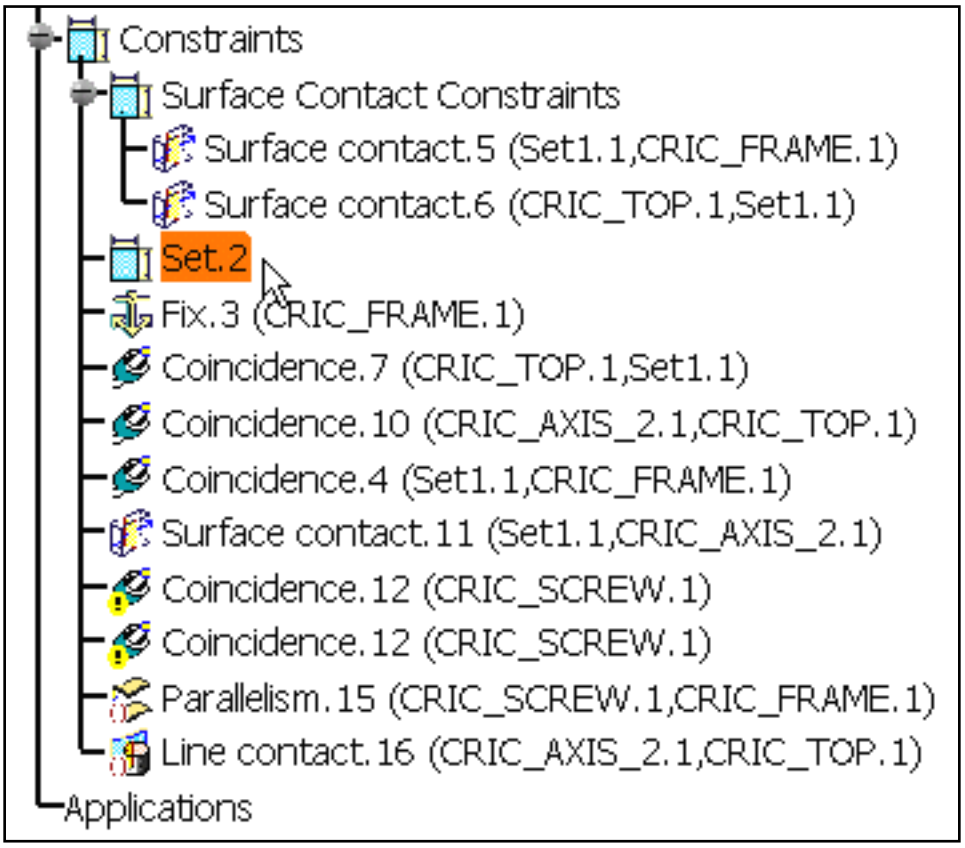

8. Multi-select **Coincidence.7**, **Coincidence.10** and **Coincidence.4** and right-click to use the **Selected objects -> Reorder constraints contextual** commands.

9. Select **Set.2** as the new location for these constraints.

10. Expand the new node to check that **Set.2** contains the three constraints:

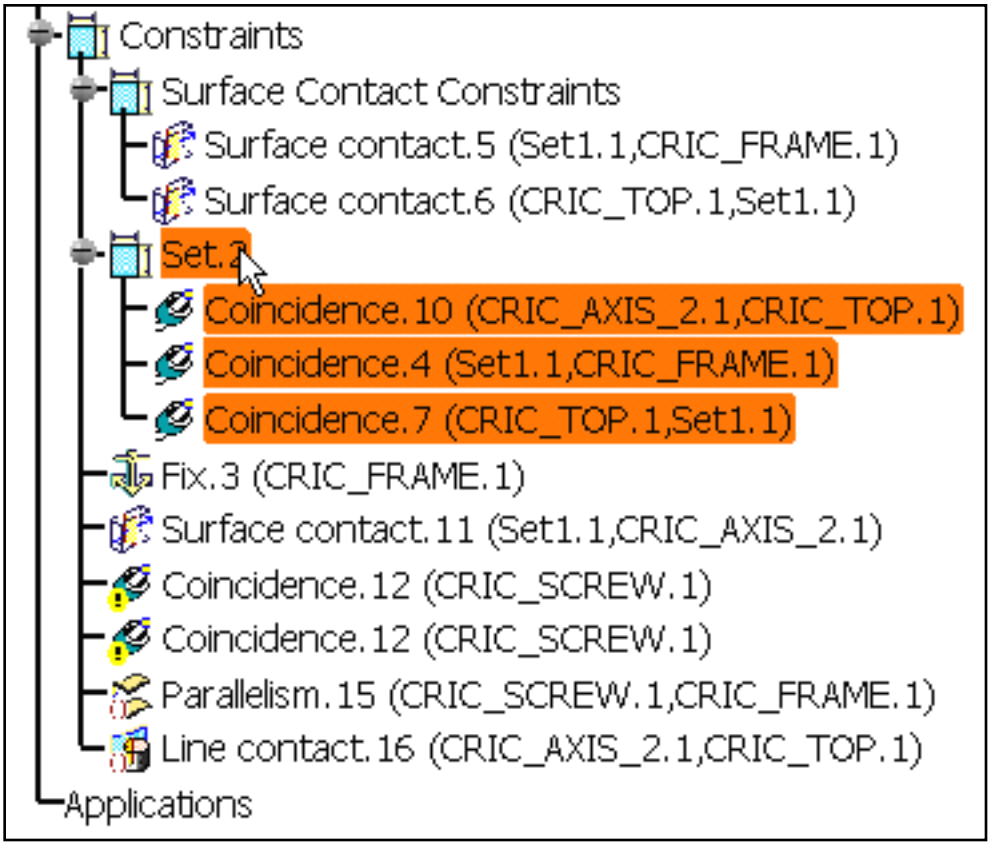

Handling Sets

11. Right-click **Set.2** and select **Set.2 object** to display the contextual menu available for this node.

The following contextual commands are available:

- **Add set**: creates a set at the level below (in our example, **Set.3** would be created below **Set.2**).
- **Remove set**: deletes the set, not the constraints it contained.
- **Group in new set**: locates the selected set within a new set.
- **Move Set after**: moves the set after the set you select.
- **Move Set inside**: moves the set within the set you select.

Refreshing Constraints

This task consists in refreshing constraints.

For constraints pointing published element in a missing component, the constraint's masks remain broken after inserting the missing component. Because there is now way to inform these constraints that the component is back, they cannot be automatically re-evaluated.

This contextual command is available for:

- A constraint object, only the selected constraint is refreshed.
- A constraints node in the specification tree, all constraints in the node are refreshed.
- A set of constraints, all constraints in the set are refreshed.

Open the Assembly_02.CATProduct document.

1. Expand the specification tree.

   Concidence.3 and **Concidence.4** constraints are broken.

   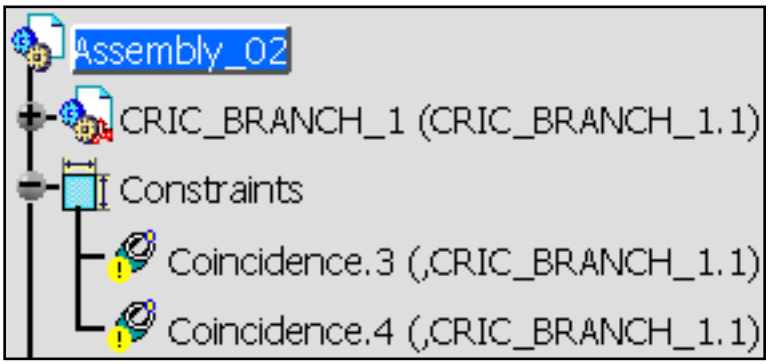

2. Right-click **Assembly_02** and select **Components -> Existing Component...** from the contextual menu.

   Select the **Sub_Product1.CATProduct** document.

   Constraint's status still broken.

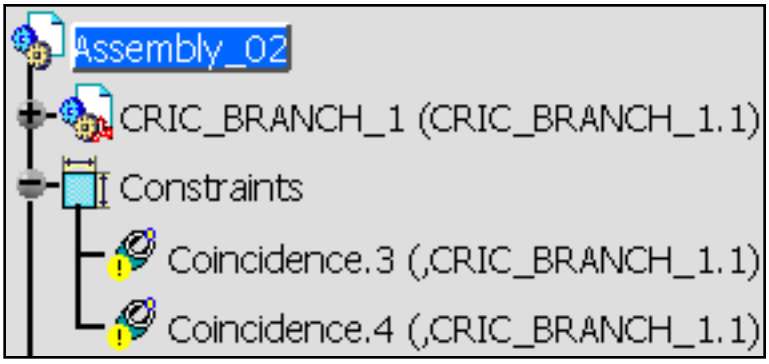

3. Right-click Constraints and select **Constraints object -> Refresh Constraint** from the contextual menu.

Constraint's status have been modified. Their status have been re-evaluated to not up to date.

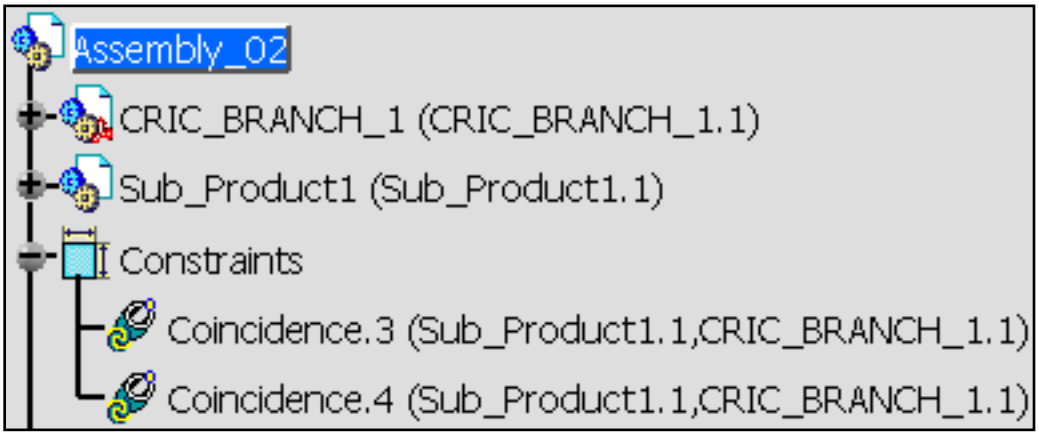

Moving Components

Translate Components: click this icon, select the component to be translated and enter the offset values.

Rotate Components: click this icon, click the Rotation tab, select the component to be rotated, choose an axis and enter the angle values.

Manipulate Components: click this icon, click the parameters you wish, select the component to be moved and drag this component.

Snap Components: click this icon and select both elements.

Smart Move: click this icon and select the components to be moved (and constrained if you check the **Automatic constraint creation** option).

Smart Move with Viewer: select the components to be moved (and constrained if you check the **Automatic constraint creation** option) and click this icon.

Explode a Constrained Assembly: click this icon, select the parameters you need and select the assembly to be exploded.

Stop Manipulation on Clash: click this icon and use the compass or the Manipulation command.

Translating Components

This task will show you two ways to translate a component:

- by entering translation values
- by selecting geometrical elements to define a translation direction.

If you are working in Assembly Design workbench, this task is P1-only.

Using P2 configuration, you can rotate constrained components by means of the Shift key and the compass.

The element to be translated must belong to the active component.

The option **Automatic switch to Design mode** is available for this command. For more about this option, refer to Access to geometry in the Infrastructure User's Guide.

Open the Moving_Components_01 document.

1. Click the **Translate or Rotation** icon:

   The **Move** dialog box is displayed. Either you specify an offset value between the element and x, y or z axis, or you select a geometric element to define the direction you need.

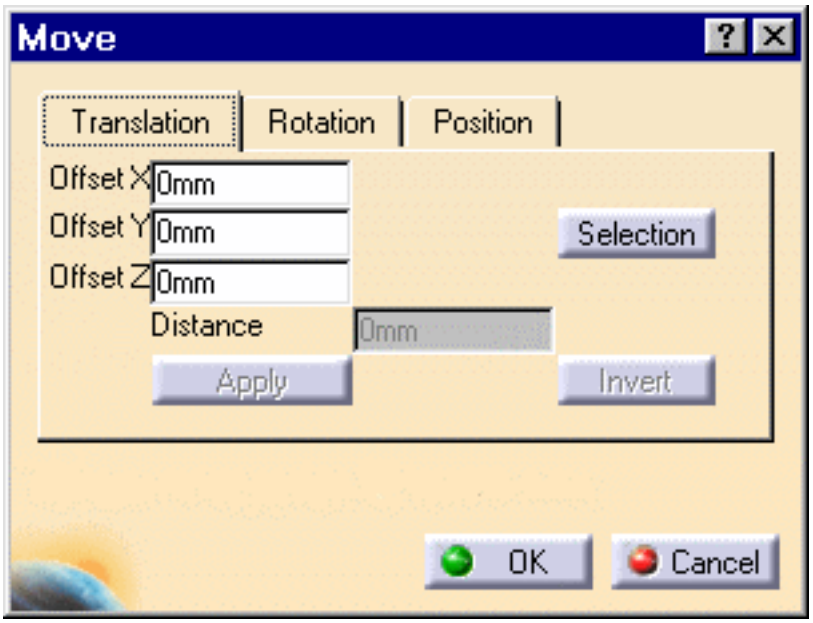

2. Select the component to be translated, that is **CRIC_BRANCH_3**.

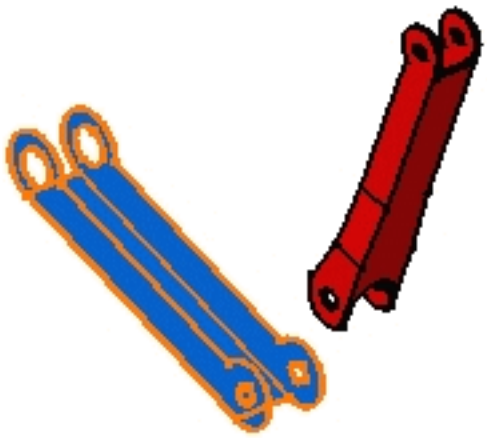

By Entering Values

3. Enter **50 mm** as the offset value, in the **Offset X** field. The component will be translated along x axis.

4. Click **Apply**.

   The selected component is translated accordingly.

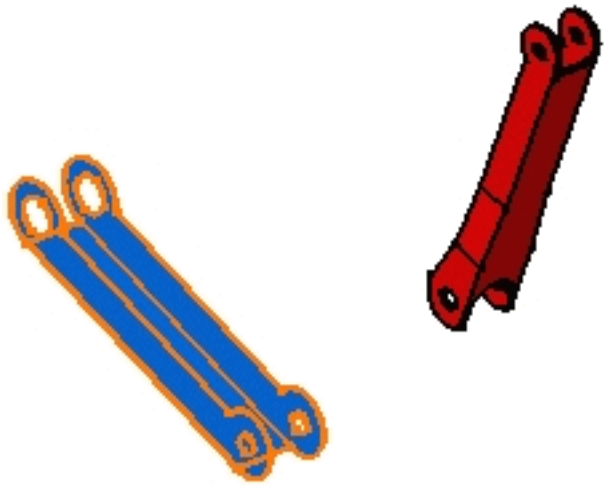

5. Click the **Invert** button to reverse the previous operation and translate the component in the opposite direction.

   The component is translated in the opposite direction. You can click **Apply** as many times as you wish to translate the component to the desired position.

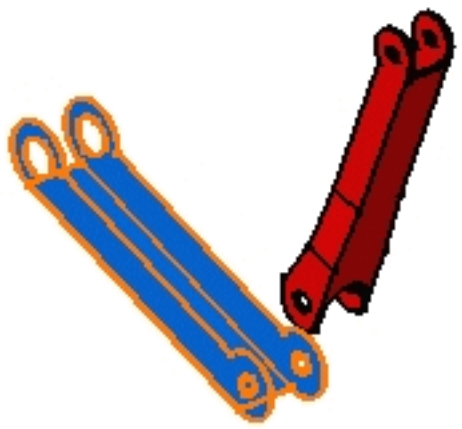

6. Click **OK** to close the dialog box.

7. Repeat steps 1 and 2.

By Selecting Geometric Elements

8. Click the **Selection** button to define a new translation with respect to a geometric element.

   The Translation tab contents is grayed out. If you select a line or a plane you need to enter a distance value. The translation is then done along the selected line or normal to the selected plane. Selecting two faces or planes assumes these elements are parallel.

9. Select the red and blue faces as shown. These faces are parallel.

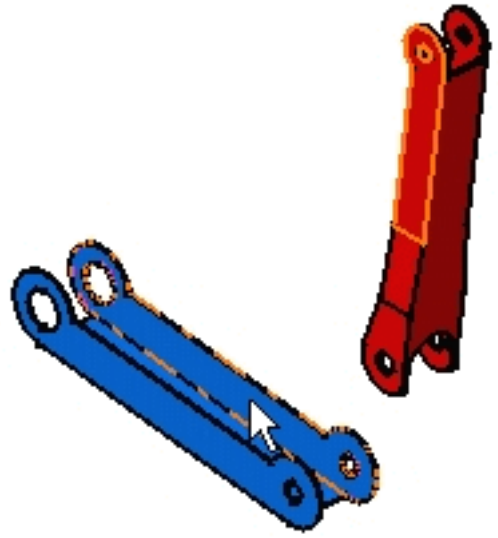

The application computes the distance between these faces.
The **Offset** field then displays this distance value:

Offset X: 20mm

Offset Y: 0mm

Offset Z: 0mm

10. Click **Apply** to translate the blue component.

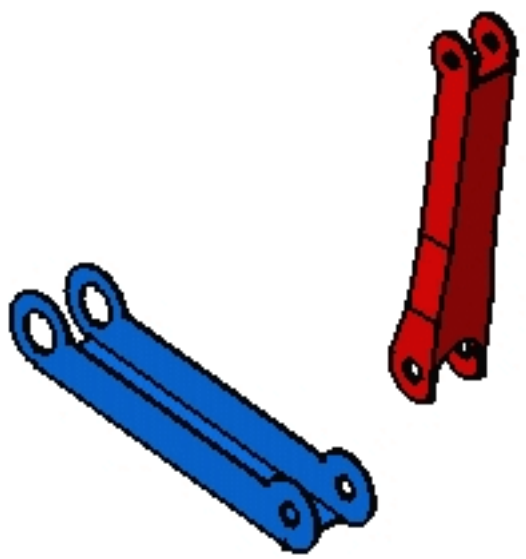

You can apply this translation to any other components. You just need to select it and click the **Apply** button.

11. Click **OK** to exit.

Rotating Components

This task will show you the two ways of rotating a component:

- by entering the rotation angle and specifying the rotation axis
- by selecting a geometric element as the rotation axis and entering the angle value

If you are working in Assembly Design workbench, this task is P1-only.

Using P2 configuration, you can rotate constrained components by means of the Shift key and the compass.

The element to be rotated must belong to the active component.

The option "Automatic switch to Design mode" is available for this command. For more about this option, refer to Access to geometry in the Infrastructure User's Guide.

Open the Moving_Components_01 document.

1. Click the **Translate or Rotation** icon:

   The **Move** dialog box is displayed. Translation options are available. To find out how to translate components, refer to Translating Components.

2. Click the **Rotation** tab.

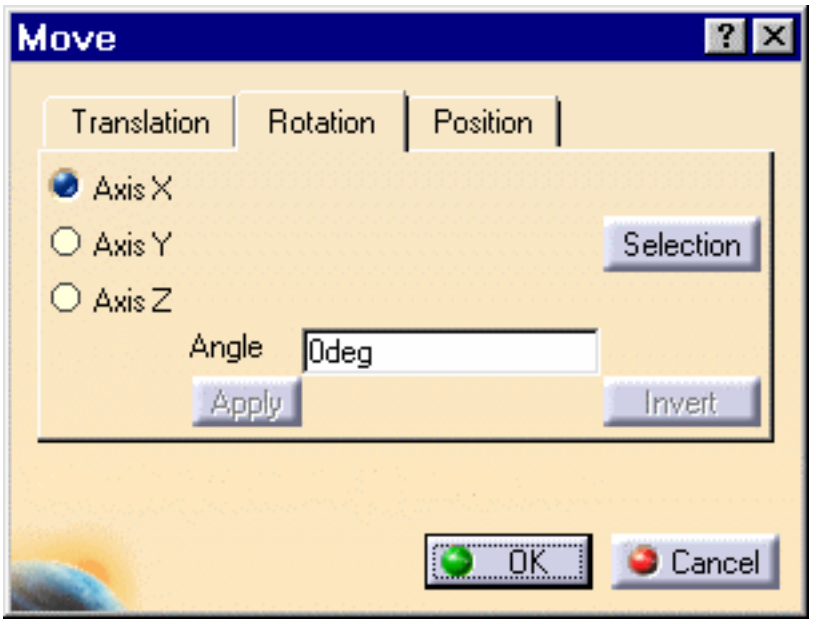

3. Select the component you wish to rotate, that is **CRIC_BRANCH_1**.

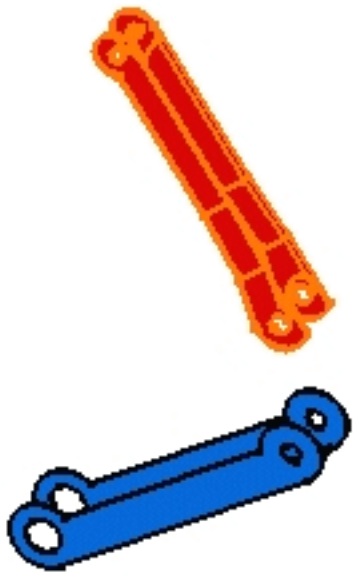

Entering a Rotation Angle

4. For example, check the **Axis Y** option to specify the axis of rotation.

5. Enter **90** as the angle value in the **Angle** field.

   The selected component is rotated accordingly.

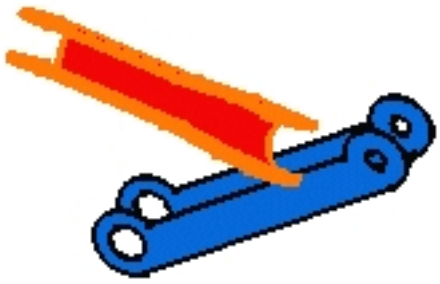

7. Click **OK** to close the dialog box.

8. Repeat steps 1, 2 and 3.

Selecting Geometry to Define the Axis of Rotation

9. Click the **Selection** button to define a new rotation with respect to a geometrical element.

10. Select the edge as shown to specify the new rotation axis.

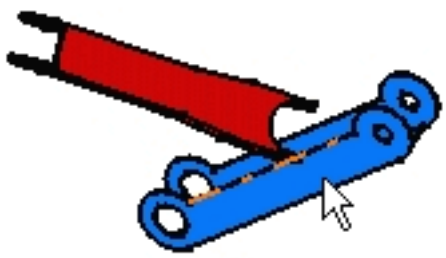

11. Enter **90** in the **Angle** field.

12. Click **Apply** to rotate the red component.

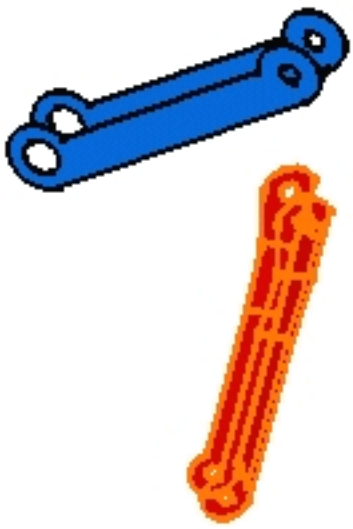

You can apply this rotation to any other components. You just need to select it and click the **Apply** button.

13. Click **OK** to exit.

Manipulating Components

This task will show you how to manipulate a component. The **Manipulate** command lets you move a component freehand with the mouse. It is less constraining than the **Translate Component** and **Rotate Component** commands. See Translating Components and Rotating Components.

The element to be manipulated must belong to the active component.

Open the Moving_Components_02 document.

1. Click the **Manipulate** icon:

   The Manipulation Parameters dialog box appears. You can translate or rotate components using one of the following options:

   The first and second horizontal rows are reserved for translations. You can move your component along the x, y or z-axis as well as in the xy, yz and xz planes.

   The third row is reserved for rotations. You can rotate your component around the x, y or z-axis.

   The fourth column lets you specify the direction of your choice by selecting a geometric element. This element defines the direction of the move or the axis of rotation.

2. Click the **Drag along Y axis** icon:

3. Select **Set1** as the component to be translated.

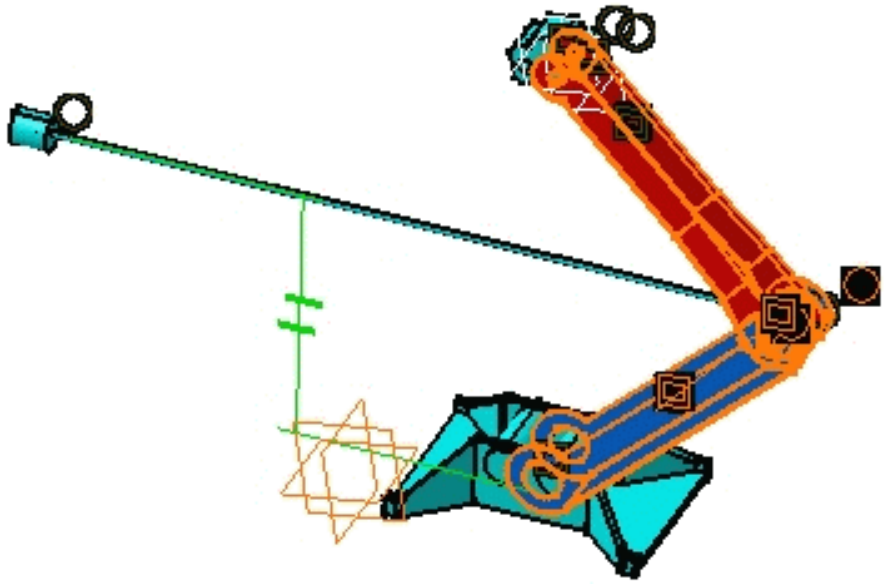

4. Drag **Set1**.

The component is translated in the Y axis direction.

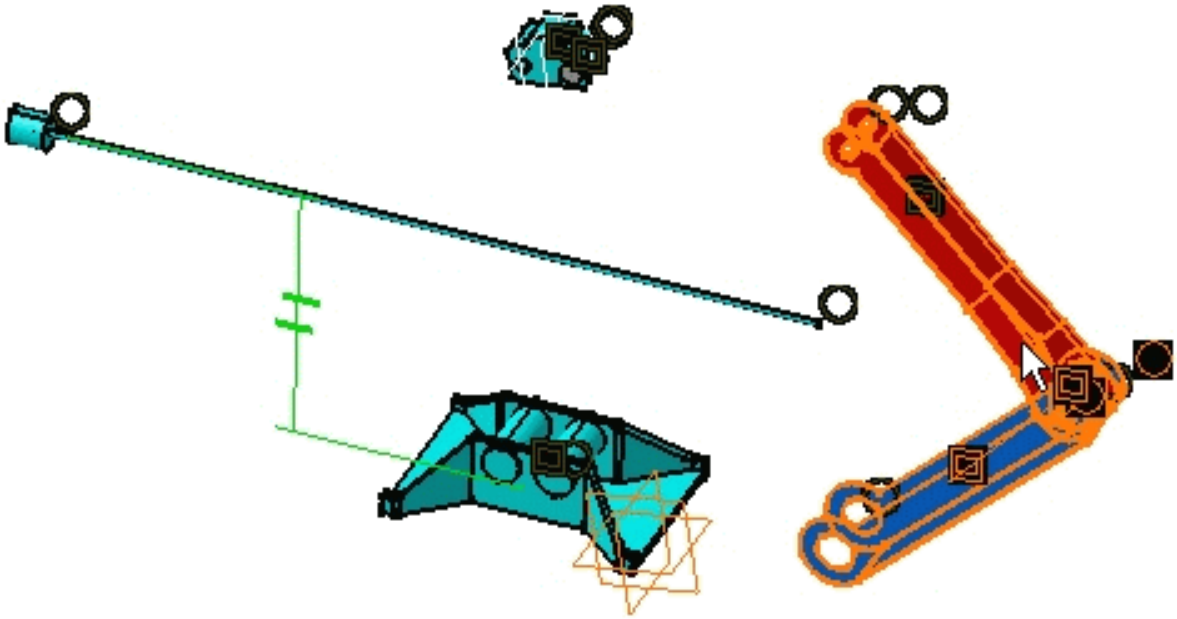

5. Now select **CRIC_FRAME** and click **Drag around Y axis** icon:

6. Drag the component. You are rotating it around the Y axis.

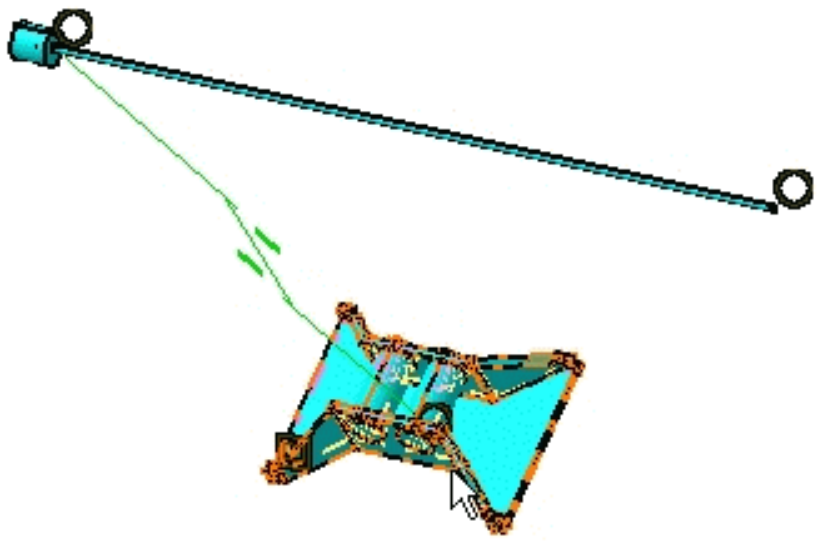

7. Check the option With respect to constraints. If you repeat the previous operation, you will notice that you are not allowed to do it. The existing parallelism constraint prevents you from moving the component.

8. Click **OK** to exit.

Use the Shift key and the compass to manipulate constrained components.

Flexible components cannot be moved via the Manipulate command.

Snapping Components

The **Snap** command projects the geometric element of a component onto another geometric element belonging to the same or to a different component. Using this command is a convenient way to translate or rotate components.

The **Snap** is able to work in visualization mode, which means the positioned component and the positioning parts will no longer need to be switched into design mode. However, in order to select points, you must be working in **Design mode**.

For DMU Navigator, this task is P1-only.

The element to be snapped must belong to the active component.

Open the Moving_Components_01 document.

Depending on the selected elements, you will obtain different results. This table indicates what you can do:

First Element Selected	Last Element Selected	Result
point	point	Identical points.
point	line	The point is projected onto the line.
point	plane	The point is projected onto the plane.
line	point	The line passes through the point.
line	line	Both lines become collinear.
line	plane	The line is projected onto the plane.
plane	point	The plane passes through the point.
plane	line	The plane passes through the line.
plane	plane	Both planes become parallel.

Make sure you work in Design mode (use **Edit->Representations->Design Mode**)

1. Click the **Snap** icon:

2. Select the red face as shown.

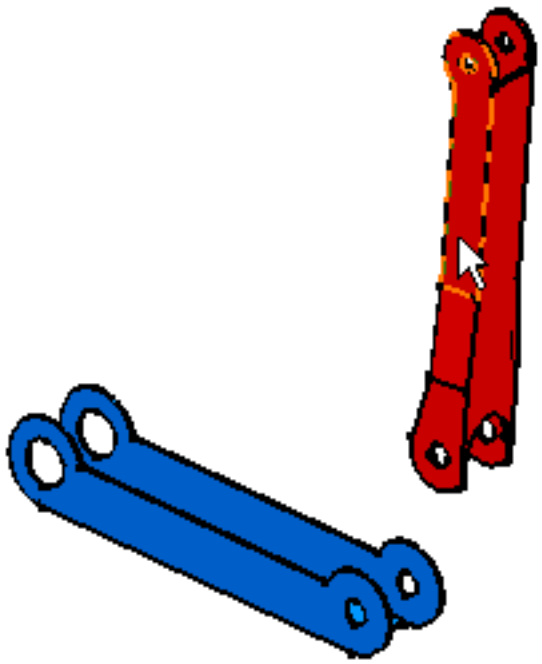

The element selected first is always the element that will move.

3. Select the blue face as shown.

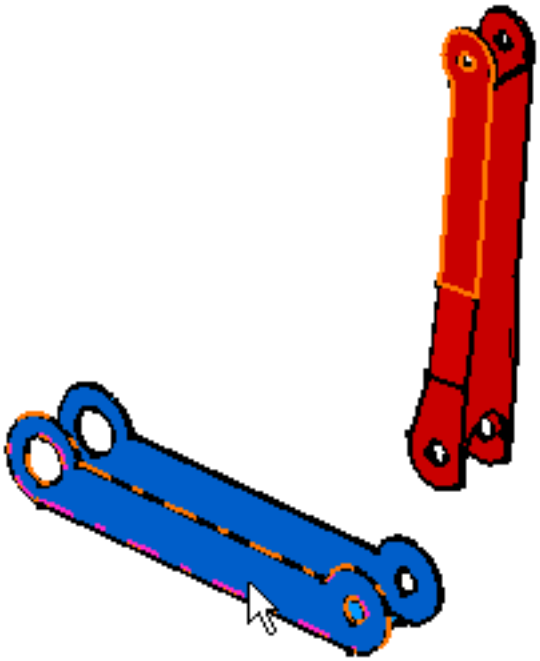

The red face is projected onto the plane defined by the blue face.

A green arrow is displayed on the first face you selected.

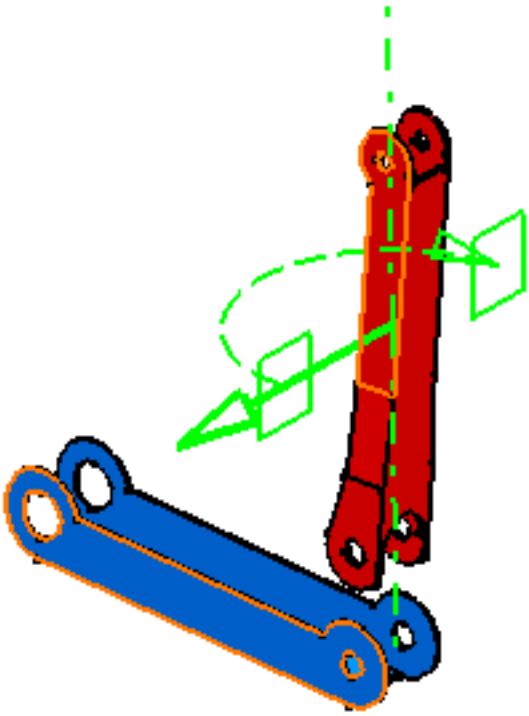

4. Click this arrow to reverse the orientation of the face.

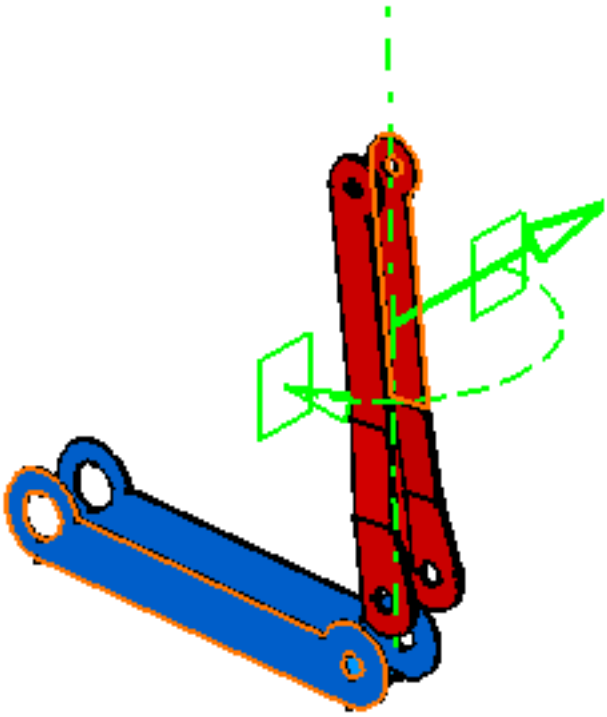

Smart Move

This task illustrates how to move a component and create a coincidence constraint between two axes.

- The **Smart Move** combines the **Manipulate** and **Snap** command capabilities, see Manipulating Components and Snapping Components. Optionally, it creates constraints. See also Smart Move with Viewer.
- The **Smart Move** is able to work in visualization mode, which means the positioned component and the positioning parts will no longer need to be switched into design mode. However, in order to create constraints, you must be working in **Design mode**.
- The **Smart Move** is disabled when the **Automatic switch to Design mode** is off and related components of the Active component in **Visualization mode**.

Open the Moving_Components_01 document.

1. Click the **Smart Move** icon and expand the **Smart Move** dialog box that appears.

   The **Quick Constraint** frame contains the list of the constraints that can be set. This list displays these constraints in a hierarchical order and can be edited by using both arrows to right of the dialog box.

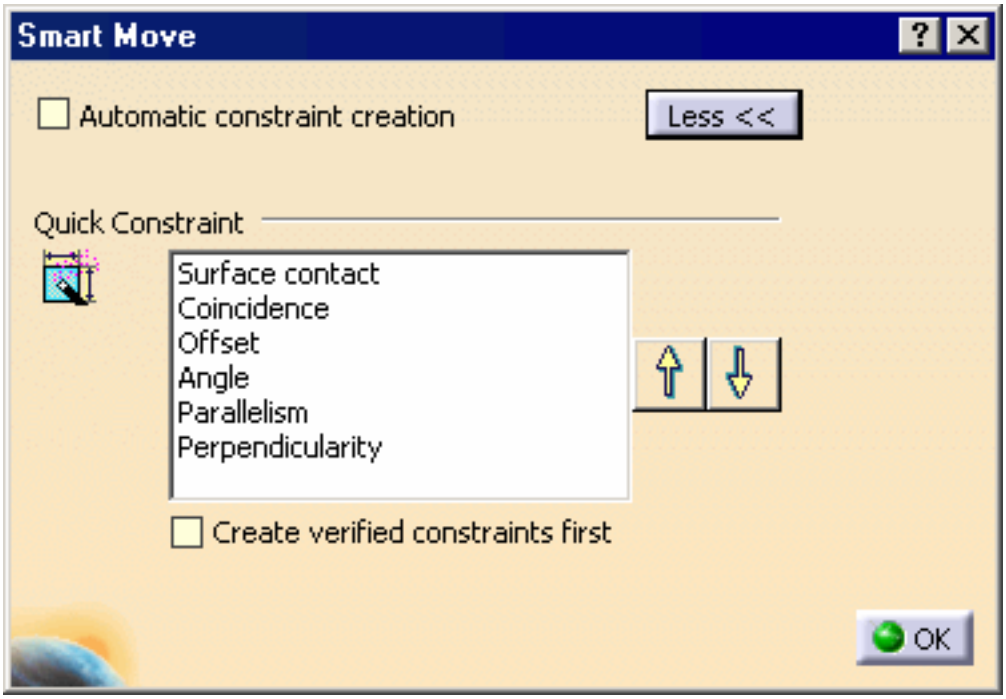

2. Check the **Automatic constraint creation** option.

The application creates the first possible constraint as specified in the list of constraints having priority. For more about this list, please refer to **Quick Constraint.**

3. Select the axis of CRIC_BRANCH_1 as shown:

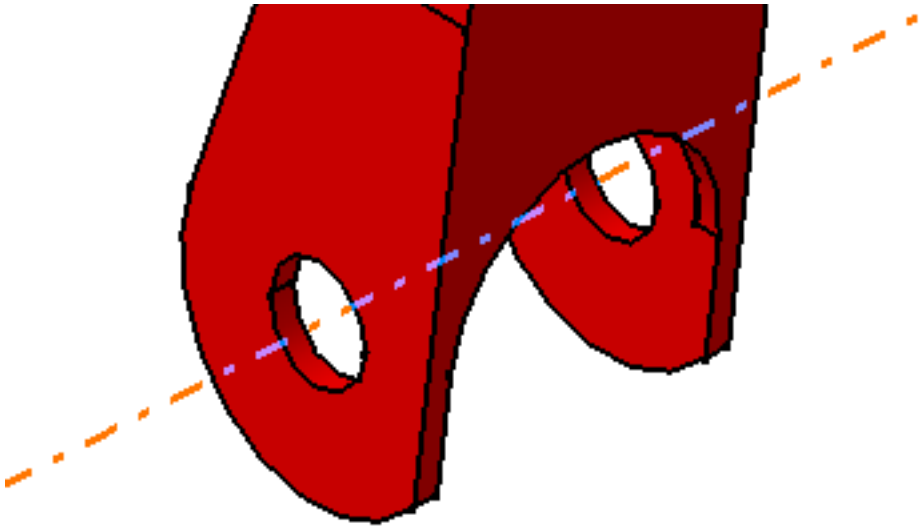

4. Select the axis of CRIC_BRANCH_3.

Instead of explicitly selecting both axes, you can select the axis of CRIC_BRANCH_1 and then drop it onto the blue inner cylinder face when your cursor points to this face.

The application detects a possible constraint between the axes. As the option Create constraint is on, the application can set a coincidence constraint between both axes.

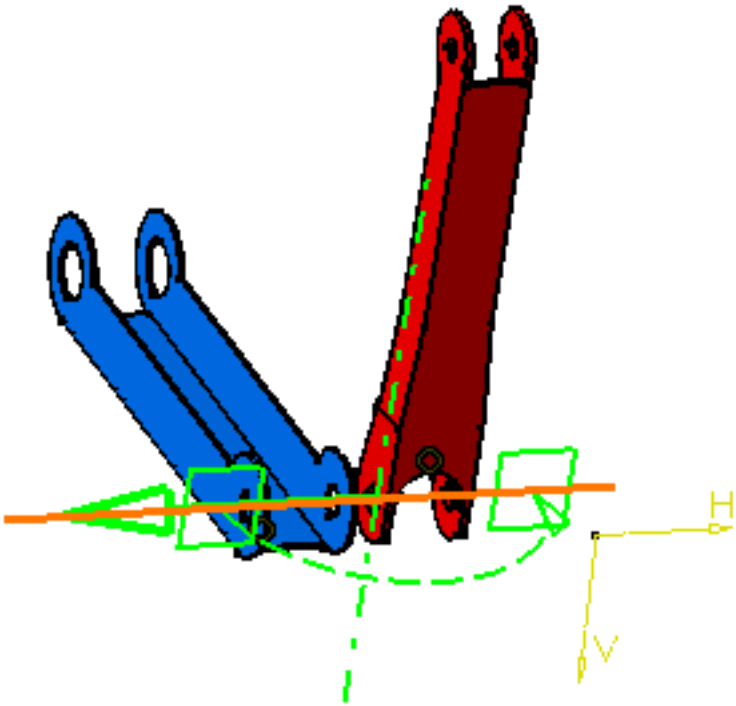

5. Click the green arrow to reverse the direction of the component.

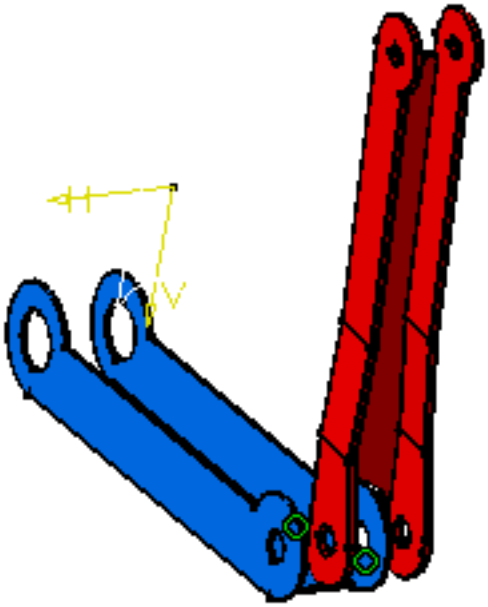

6. Click **OK** to confirm and quit the command.

The coincidence constraint is created.

Smart Move with Viewer

This task illustrates how to move a component and create a coincidence constraint between two axes.

- The **Smart Move** combines the **Manipulate** and **Snap** command capabilities, see Manipulating Components and Snapping Components. Optionally, it creates constraints. See also Smart Move with Viewer.
- The **Smart Move** is able to work in visualization mode, which means the positioned component and the positioning parts will no longer need to be switched into design mode. However, in order to create constraints, you must be working in **Design mode**.
- The **Smart Move** is disabled when the **Automatic switch to Design mode** is off and related components of the Active component in **Visualization mode**.

Open the Moving_Components_01 document.

1. Select **CRIC_BRANCH_1** and **CRIC_BRANCH_3** in the specification tree.

2. Click the **Smart Move** icon and expand the **Smart Move** dialog box, including the viewer that appears.

- The **Viewer** frame: this window appears only if you pre-select the components affected to perform the smart move. These components must belong to the same parent component.
  Using the viewer allows you to select with more accuracy the geometrical element to be moved and constrained. In the viewer window you can move and rotate the component regardless of its position the geometry window. The viewer do not forbid the selection of the geometrical element in the geometry window.
- The **Quick Constraint** frame contains the list of the constraints that can be set. This list displays these constraints in a hierarchical order and can be edited by using both arrows to right of the dialog box.

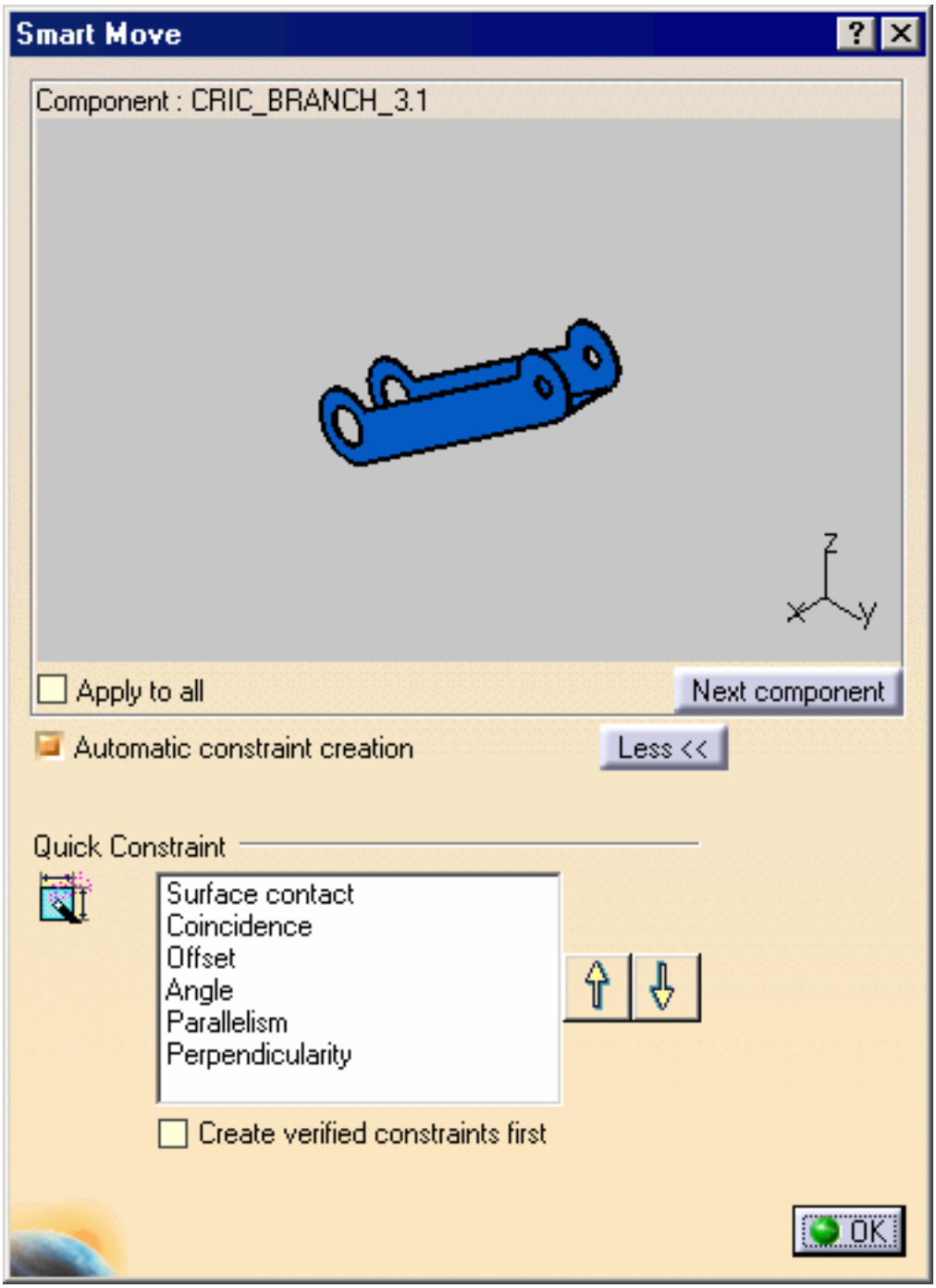

3. Check the **Automatic constraint creation** option.

The application creates the first possible constraint as specified in the list of constraints having priority. For more about this list, please refer to **Quick Constraint.**

4. Select the face of **CRIC_BRANCH_3** as shown in the dialog box.

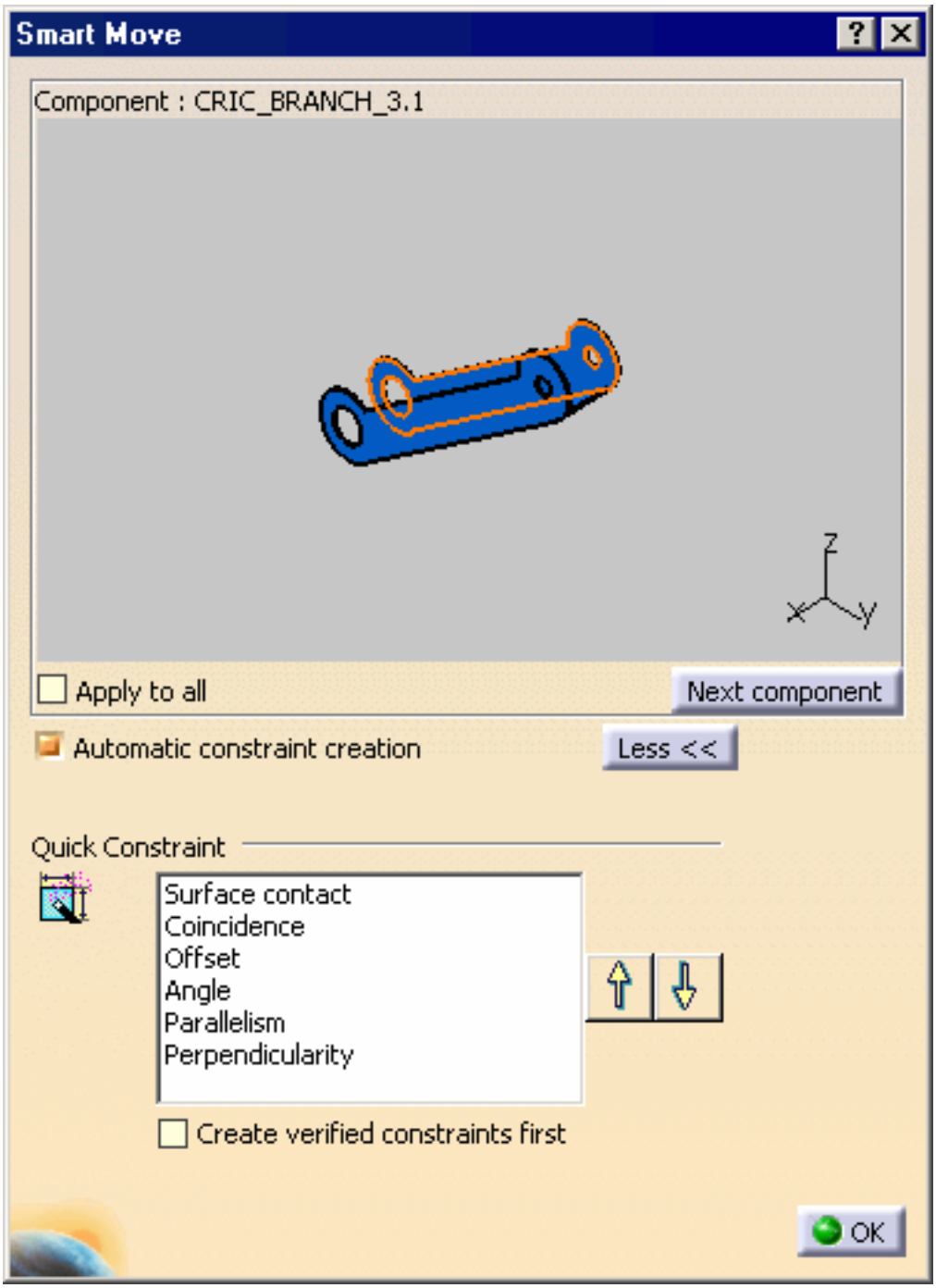

5. Click **Next component**.

6. Select the face of **CRIC_BRANCH_1** as shown in the dialog box.

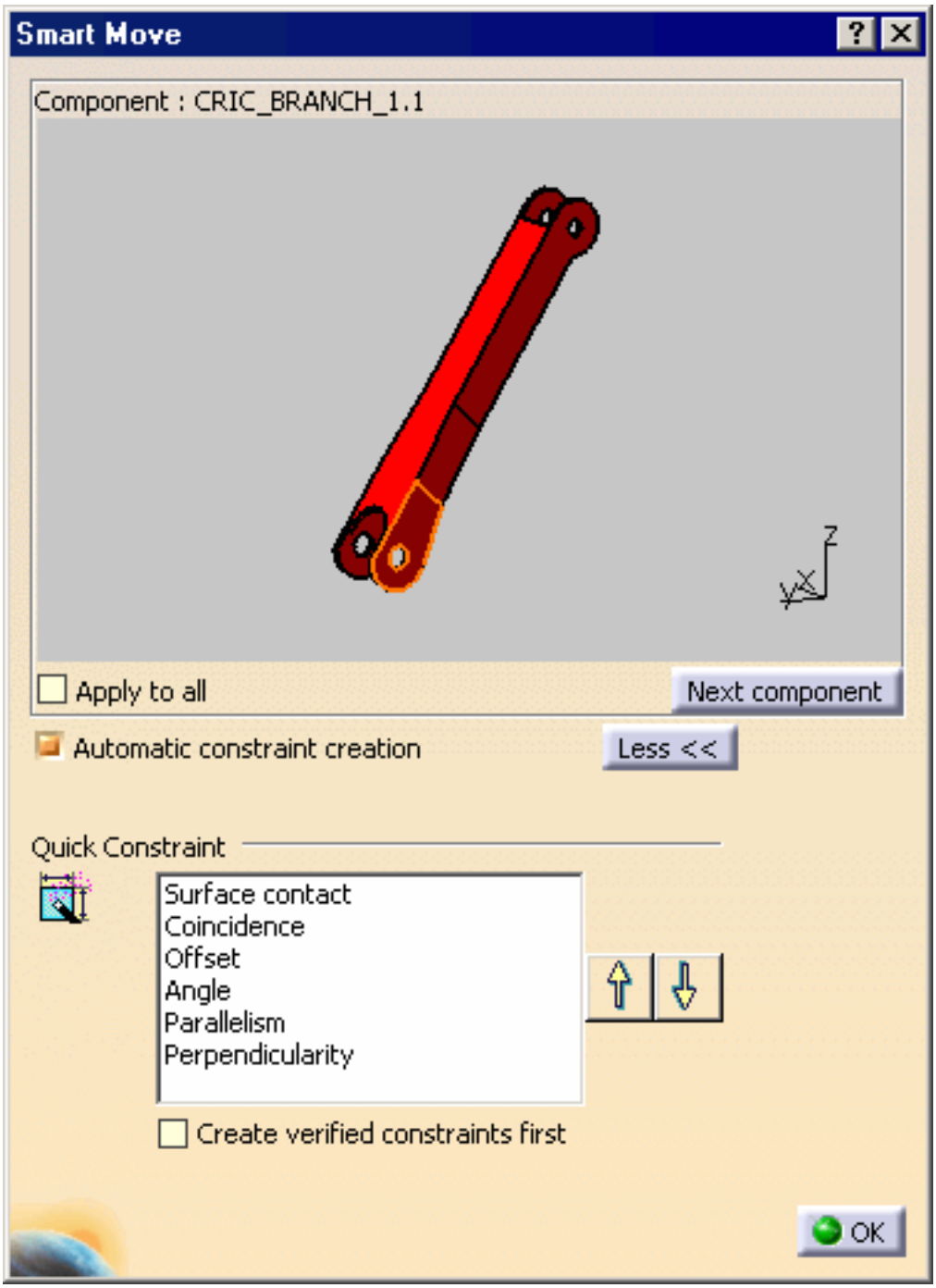

7. Click **OK** to confirm and quit the command.

The contact constraint is created.

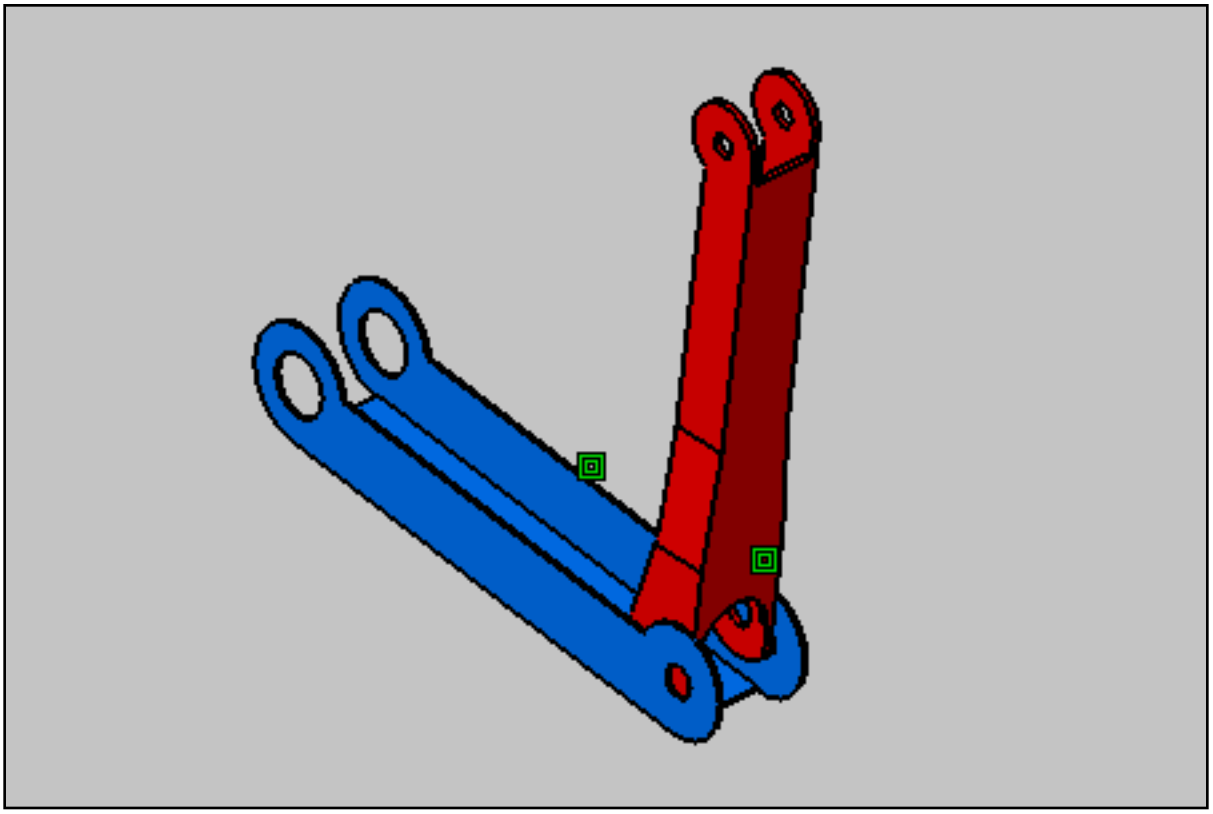

Exploding a Constrained Assembly

This task shows how to explode an assembly taking into account the assembly constraints. This Explode type is applicable only to specific cases:
when the assembly is assigned coincidence constraints:

- axis/axis
- plane/plane

Open the Moving_Components_03 document.

1. Click the **Explode** icon:

   The Explode dialog box appears.

2. **Wheel Assembly** is selected by default, keep the selection as it is.

   - You can also use the drag and drop capability (drag the explode icon and drop it onto the required product in the specification tree.
   - The **Depth** parameter lets you choose between a total (**All levels**) or partial (**First level**) exploded view.

3. Keep **All levels** set by default.

4. Set the explode type. **3D** is the default type. Keep it.

5. Click **Apply** to perform the operation.

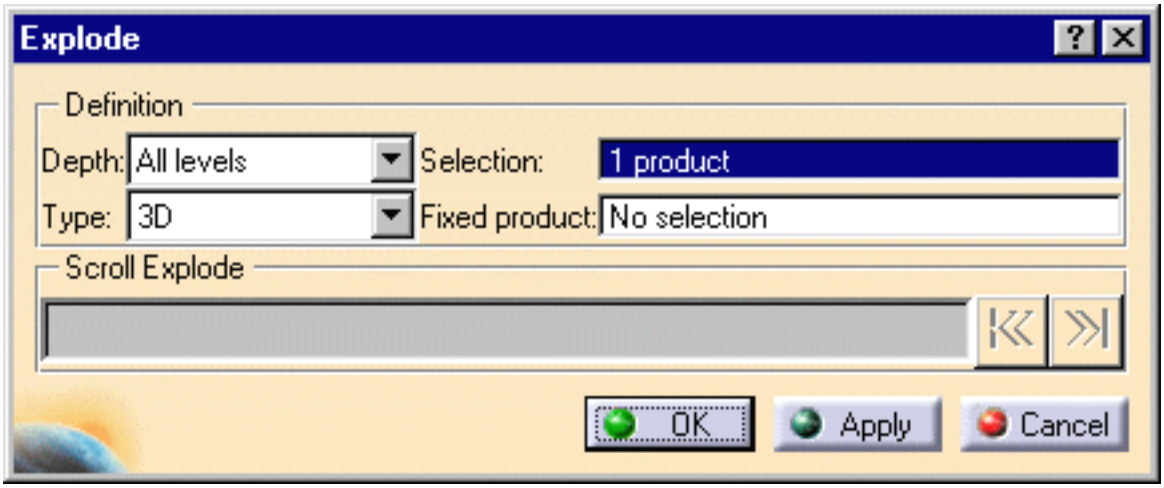

You can move products within the exploded view using the 3D compass.

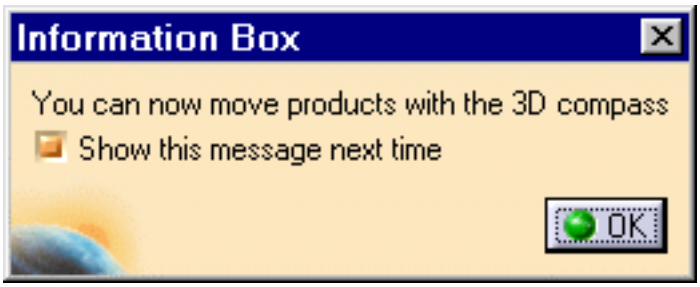

In DMU Fitting Simulator only: the manipulation toolbar is also available once you move an object with the 3D Compass.

The **Scroll Explode** field gradually displays the progression of the operation. The application assigns directions and distance. Once complete, the resulting exploded view looks like this:

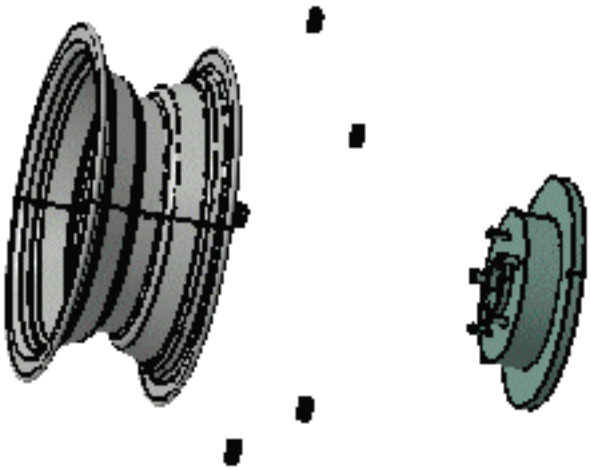

You are not satisfied with this result as the nuts are not correctly positioned. The constraints are not respected. Replay the scenario selecting the constrained type.

6. Still in the **Explode** dialog box, set the **constrained type.**

7. Define a fixed product: in our example select the Rim1 either in the specification tree or in the geometry area

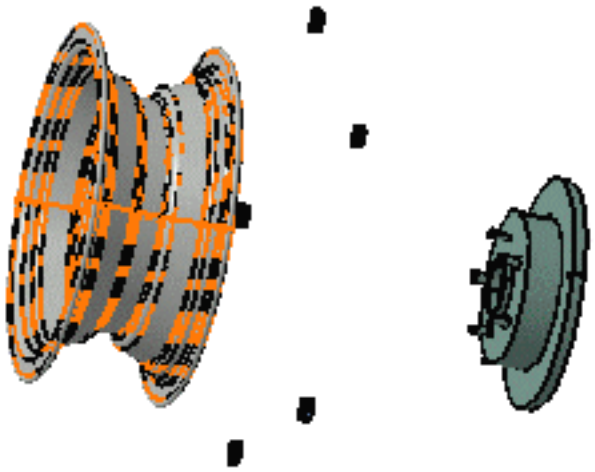

8. Click **Apply** to perform the operation.

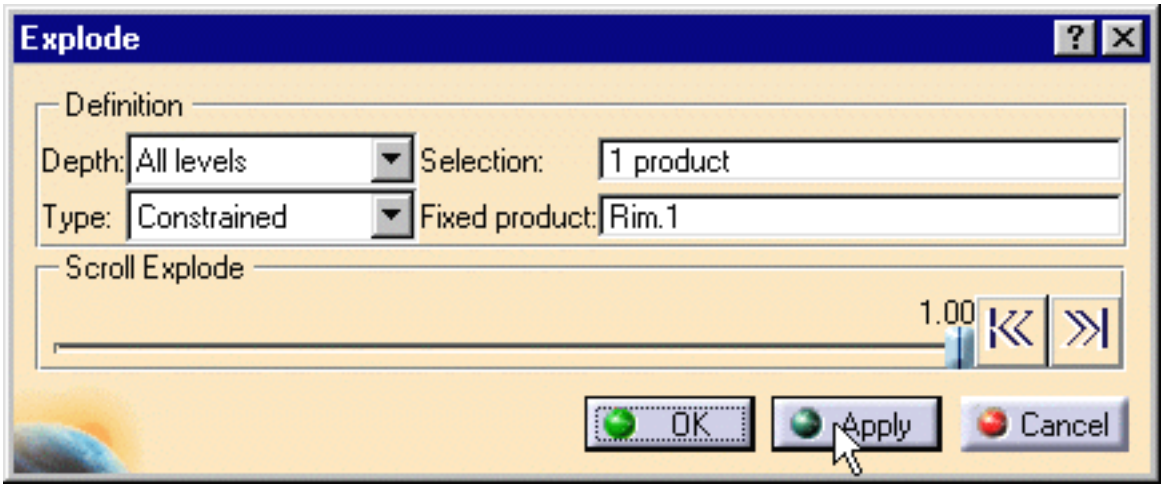

Once complete, the resulting exploded view looks like this:

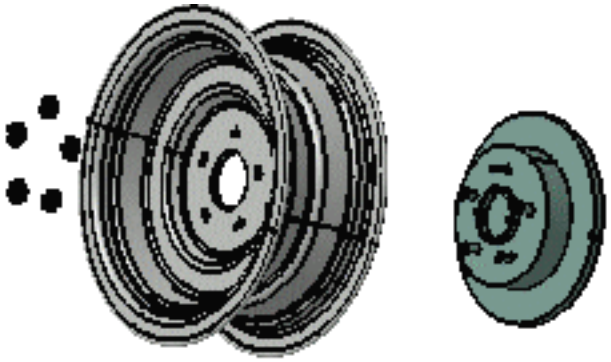

The nuts are correctly positioned, the exploded view corresponds more to the reality and to a technical documentation.

9. Click **OK** to validate the operation or click Cancel to restore the original view.

If you click **Ok**, the following warning message is displayed as the exploded view is kept when exiting the command. In this case, if you need to restore the initial view click the **Reset** icon:

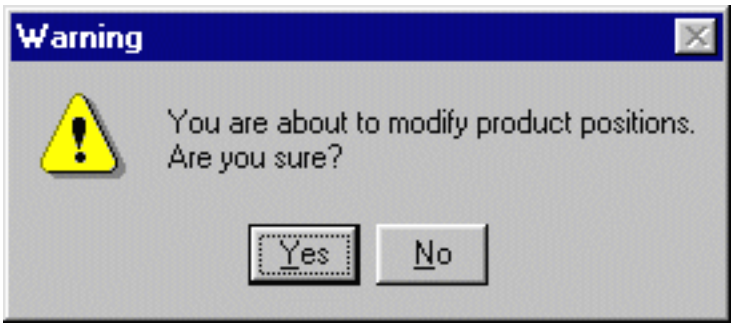

The explode functionality aims at understanding better how the assembly is structured. You can use it for further purposes: creating scenes, print, keep the exploded view as archive document or generate a drawing (please refer to Create Scenes in the DMU Navigator User's Guide)

Stop Manipulation on Clash

When moving assemblies (using the compass along with the Shift key or the Manipulate command, see Manipulating Components), components may sometimes clash.
This task shows you how to view the minimum distance between these components to avoid a clash.

A clash is detected only when the **With respect to constraints** option is checked in the **Manipulation parameters** dialog box:

Open the Assembly_01.CATProduct document and perform all the tasks of the Assembly Design Getting Started section until "Moving Components".

1. Drag the **compass** onto **CRIC_SCREW**.

2. Press and hold down the Shift key, select **v/z** axis on the compass, then drag and drop the component so as to obtain this clash:

   The components involved in the clash are now highlighted to facilitate your work.

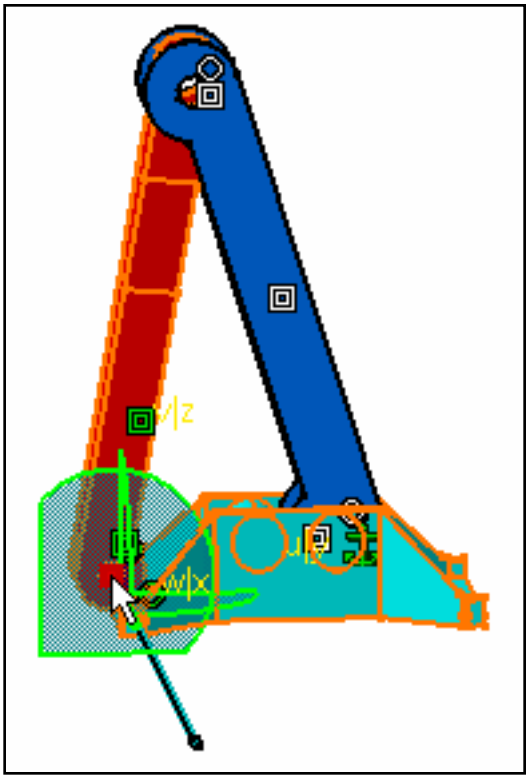

3. Click the **Manipulation on Clash** icon:

4. Move the component slowly from right to left, then from left to right to repeat the clash.

   The application stops the move operation just before the clash occurs.

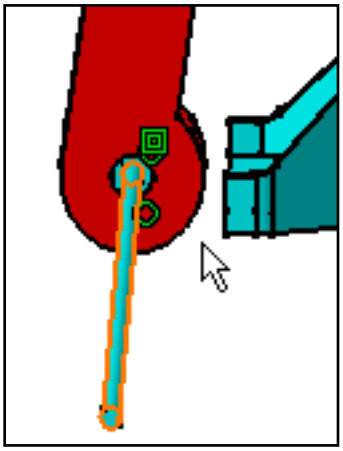

5. Repeat the operation more quickly: the operation is stopped earlier, which makes the gap larger between both components.

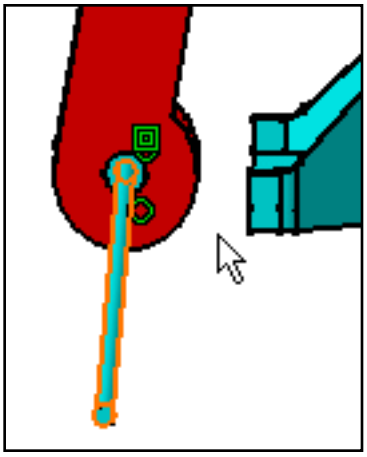

What you need to know is that the more slowly you handle the mouse, the smaller the distance between the components will be.

6. To quit the command, simply click the **Manipulation on Clash** icon again: . You can compute clashes again if needed.

The accuracy of clash detection directly depends on the one used for tessellation (SAG) on objects. This is set in the **Performances** tab of **Tools -> Options -> General -> Display.** By default, this value is set to 0.2 mm.

For more details, refer to **About Interference Checking & Analysis** in **DMU Space Analysis** documentation.

Using Assembly Tools

Manage Products in an Assembly: Select Tools -> Product Management...,modify the part number in the New part number field and replace the associated representation in the New representation field.

Publish Elements: Select Tools -> Publication...,select the element to be published then rename this element.

Use a Part Contained in a Parametric Standard Part Catalog: Open the catalog of your choice, navigate through the catalog, select the desired part, use the Copy then Paste commands.

Modify a Parametric Standard Part Catalog

Managing Products in an Assembly

This task consists in managing products in an assembly.

Open the AssemblyTools01.CATProduct document.

1. Select **Tools -> Product Management...**

   The Product Management dialog box is displayed.

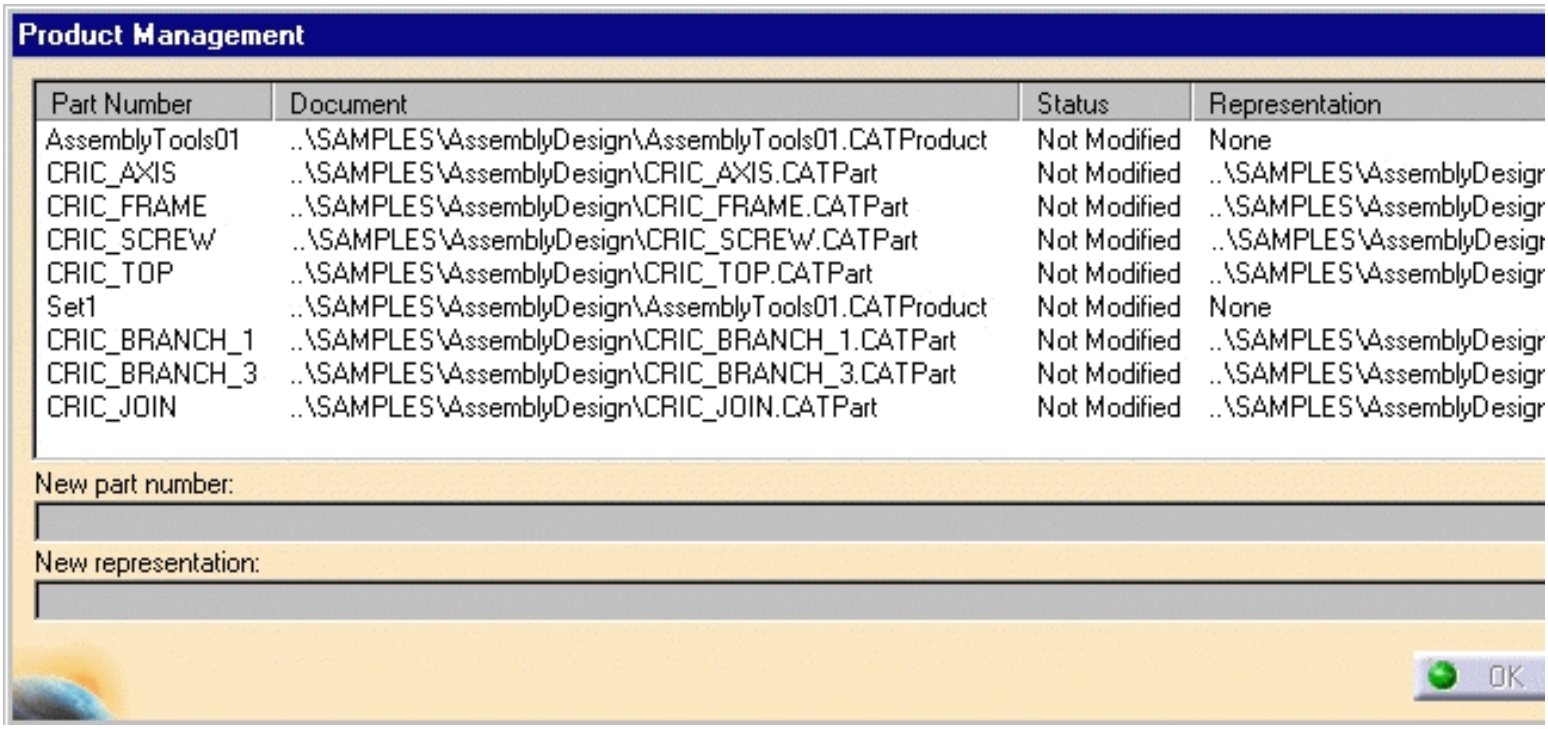

   The following is displayed for each components contained in the assembly:
   - part Number
   - document source file
   - status of the component
   - associated representation.

   You can modify the part number in the New part number field and replace the associated representation in the New representation field of the selected product.

2. Click the ... button to open the Replace Representation dialog box.

3. Click OK to validate.

Publishing Elements

Publishing geometrical elements is the process of making geometrical features available to different users. This operation is very useful when working in assembly design context

This task shows you the method for making elements publicly available: you will publish a plane, a sketch then a parameter not visible in the specification tree.

In this page, you will also find information about the following subjects:

- Publishing Part Design Features
- Assembly Constraints and Published Generative Shape Design Geometry
- Publishing in Assembly Design
- Replacing a Published Element
- Publishing Parameters
- Importing and Exporting Published Names
- What Happens When Deleting a Published Element?

Open the Publish.CATPart document or if you are working in Assembly Design, for example open the AssemblyTools01.CATProduct document, and ensure that the component containing the element you wish to publish is active.

1. Select **Tools -> Publication**.

The **Publication** command lets you:

- Publish a geometric element
- Edit the default name given to the published element
- Replace the geometric element associated with a name
- Create a list of published elements
- Import a list of published elements
- Delete a published element.

The **Publication** dialog box appears.

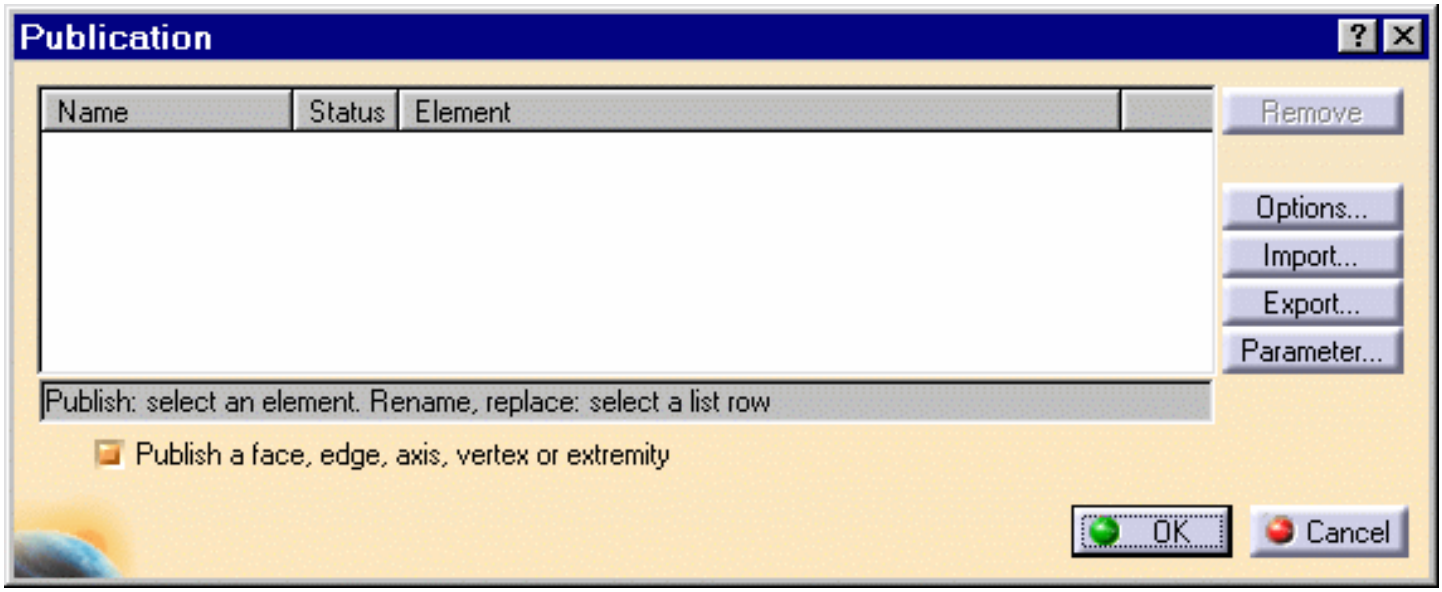

If you are working in Assembly Design, the dialog box also displays a **Browse** button. For more information, refer to Publishing in Assembly Design.

2. Select the element to be published. For example, select **Plane.1**.

You can publish the following elements:

- points, lines, curves, planes
- sketches
- bodies (selecting a feature selects the body it belongs to)
- Generative Shape Design features (Extrudes Surfaces, Offsets, Joins etc.)
- Free Style Features (Planar patches, curves etc.)
- parameters
- sub-elements of geometrical elements: when switched on, the option **Publish a face, edge, vertex or extremity** lets you directly select faces, edges, vertices. axes. extremities.
- Part Design features.

To select axes, select cylindrical faces and use the **Other Selection** contextual command. For more about this command, please refer to *CATIA Infrastructure User's Guide*.

The dialog box displays the name and status of the selected element as well as "Plane.1", that is the default name given to the published element

3. Click **Plane.1** in the dialog box.

   The plane is highlighted in the geometry.

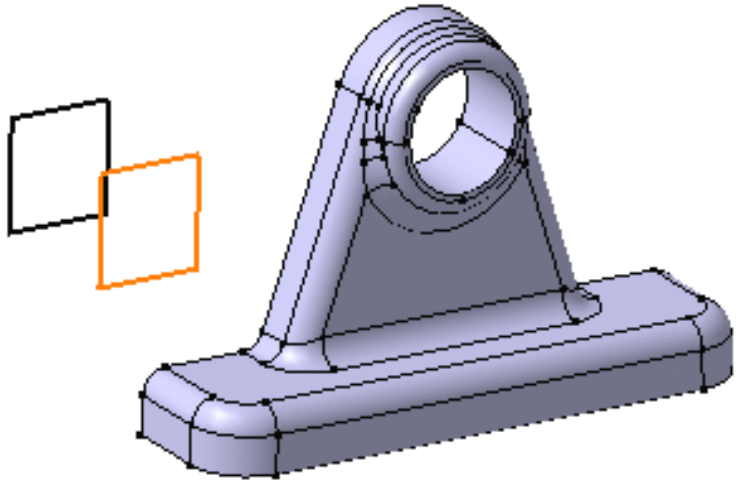

4. Rename it as New plane.

   The plane is published as **New plane**. However, you can notice that the geometric element **Open_body.1/Plane1** has not been renamed.

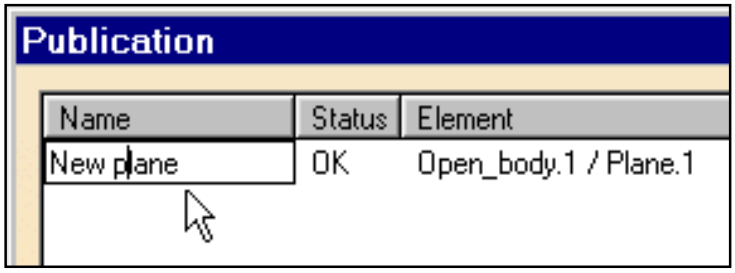

5. Before publishing another element, click **Options** to access rename options.

   When using the **Publication** command, you can actually decide to rename or not the elements you are publishing. Prior to renaming, you can set one of the three following work modes:

   - **Never:** the application will not allow you to rename the published element. This is the default option.
   - **Always:** the application will always allow you to rename the published element
   - **Ask:** the application will ask you what you decide to do, namely rename or not the published element.

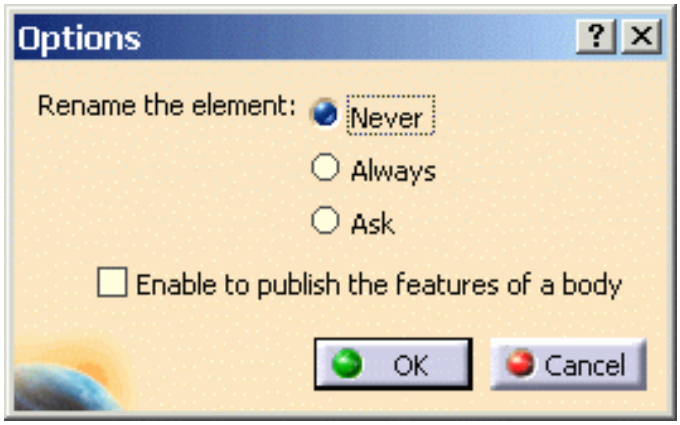

Note that:

- You can rename any element except for axes, edges and faces.
- Some characters, such as the exclamation mark, are not allowed for renaming elements.

6. Check **Ask** and click **OK** to exit.

7. Prior to selecting the element to be published, deselect **New plane** if not already done.

8. Select **Sketch.1** as the new element to be published.

9. Rename it as "**New sketch**". A message is issued asking you whether you wish to rename the published element "**Sketch.1**" as "**New sketch**".

10. Click **Yes** to confirm. The published element's name is "**New sketch**" and the geometric element is renamed too.

Notes

- Pointing at or selecting published elements simultaneously highlights the geometry, the element node and the publication node.

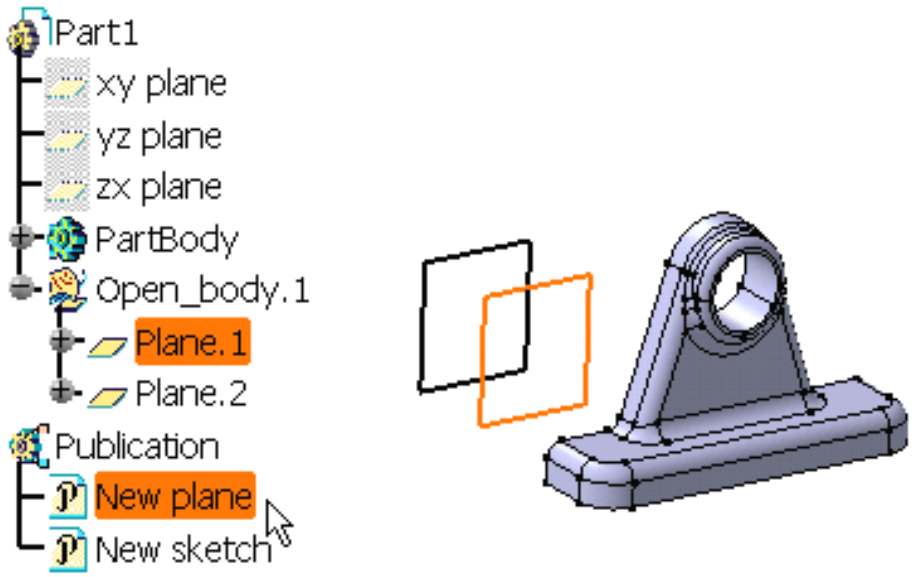

- The **Publish** capability lets you give a specific name to a geometrical element **in a given context** (for example, in a "defined in work object"). If this geometrical element is to be used in a different context (another "defined in work object"), the application does not recognize this element from its published name. In short, you need to select this object from the geometrical area, not from the Publication node.

Publishing Part Design Features

Publishing Part Design Features requires that the **Enable to publish the features of a body** capability available in the **Options** dialog box is on. If your administrator did not lock the option, you can activate the option yourself.

Assembly Constraints and Published Generative Shape Design (GSD) Geometry

Depending on your geometry, there are cases where constraints pointing to a certain type of published GSD features do not reconnect if, for example, you replace constrained parts. What happens is that links between constraints and the geometry do not take advantage of the publication. You can notice this behavior even if you selected the geometry through the **Publication** node.

GSD features concerned are those whose geometrical results depend on the number and type of the parents used for the result. This is the case of features such as **Intersect** or **Project**.

The solution to this, is to publish the geometrical result, not the feature itself. In concrete terms, rather than publishing the **Intersect** feature, you recommend you publish the vertex, not the point.

The application reminds you of this behavior when you are setting constraints on published features through the following warning message:

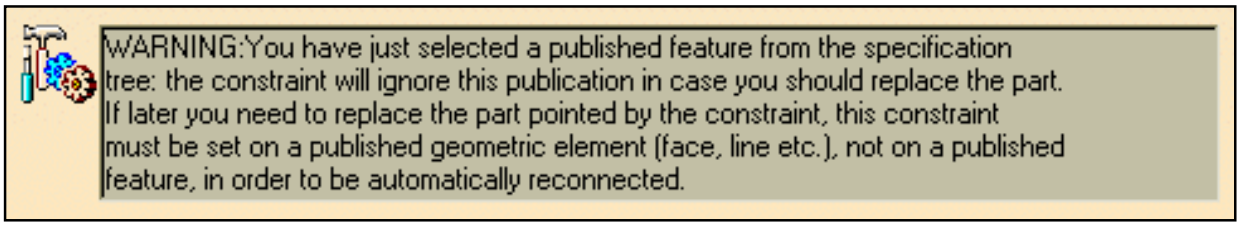

Publishing in Assembly Design

When publishing geometry in the Assembly Design workbench, the **Browse** button is available in the **Publication** dialog box. Clicking the button launches the **Component Publication** dialog box that displays only the published elements belonging to the levels inferior to the active level.

In the following example, the user is publishing an element of CRIC_BRANCH_1. When clicking the **Browse** button, the Component Publication dialog box displays published faces belonging to CRIC_BRANCH_3.

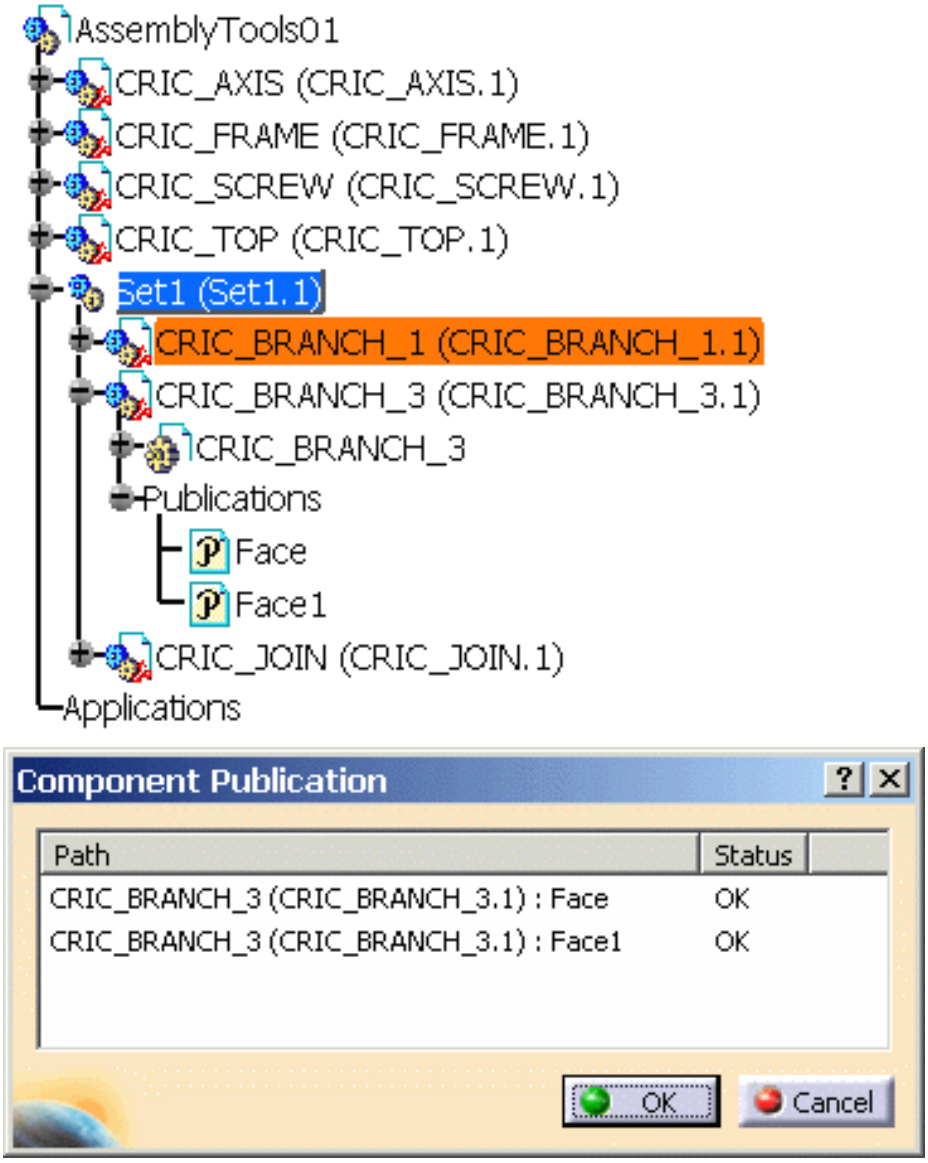

This capability works as a filter: it does not display the whole publications of the assembly. Thus, you will use it as an help for selecting already published elements whenever you wish to replace published elements.

Replacing a Published Element

11. Click "**Open_body.1/Plane.1**" to replace it with another geometric element.

12. Select "**Plane.2**" as the replacing element.

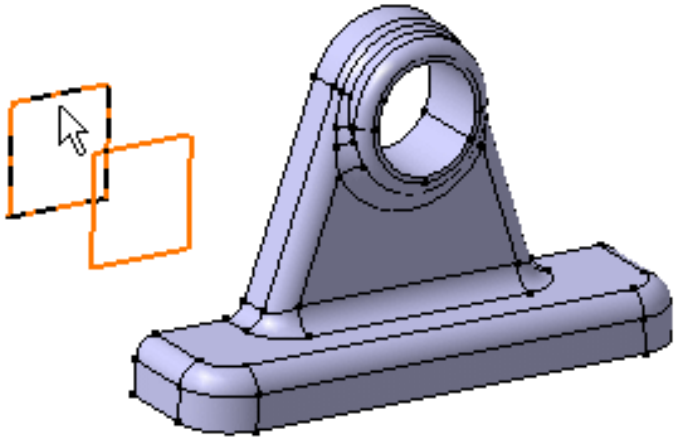

The orientation of both elements is displayed. The green arrow indicates the orientation for the new element, the red arrow indicates the orientation of the published element.

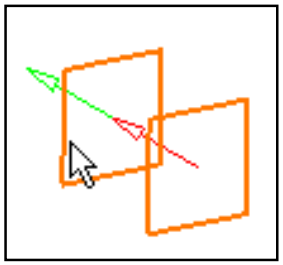

A message is issued asking you to confirm the change.

13. Click **Yes** to confirm.

Plane.2 has been published.**Plane.1** is not published any more.

The dialog now displays the following information:

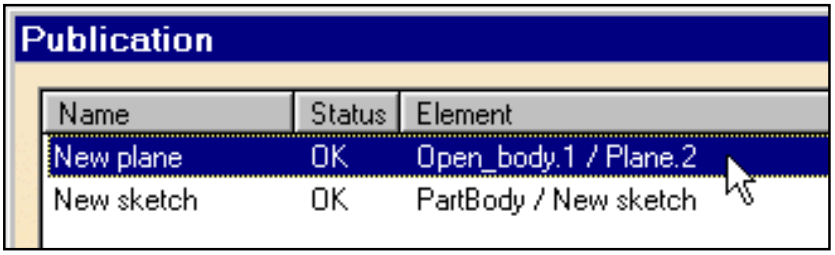

Publishing Parameters

14. You can publish the parameters of a part that are not displayed in the specification tree. To do so, click the **Parameter...** button available in the **Publication** dialog box. This displays a new window listing all parameters defined for the feature previously selected in the specification tree.

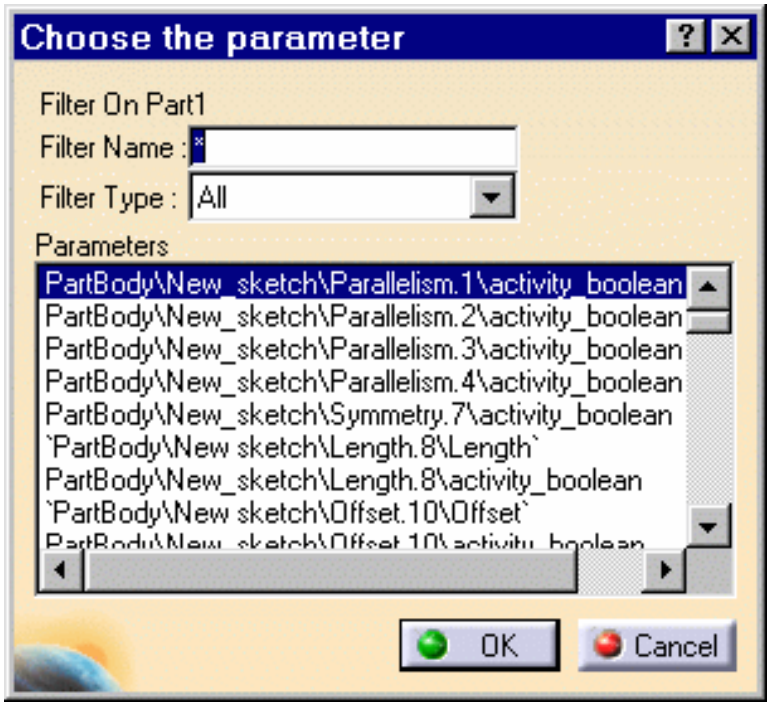

15. If the list of parameters is too long, you can filter out the parameters by entering a character string in the **Filter Name** field. For example, enter "offset".

    The list now displays only the parameters including the string "offset".

16. Select the parameter of interest.

    You can also use one of the following filter types:

    - All
    - Renamed parameters
    - Hidden
    - Visible
    - User
    - Boolean
    - Length
    - Angle
    - String

17. Click **OK** when done. This closes the dialog box. The selected parameter is displayed in the **Publication** dialog box.

Importing and Exporting Published Names

Published names can be gathered in ASCII .txt files.

To export published names to an ASCII .txt file,

- click the **Export** button.
- enter a name for the file you are creating in the Export dialog box that displays.
- click **Save** : the file is created: it contains the list of all published elements as specified in the Publication dialog box.

To import published names to an ASCII .txt file,

- click the import button.
- navigate to the file of interest in the **Import** dialog box that displays.
- select the file containing the list of published elements.
- click **Open**: the names are added to the list of the **Publication** dialog box

18. Click **OK** when satisfied.

The **Publication** entity has been added to the specification tree. The three published elements are displayed below **Publication** node:

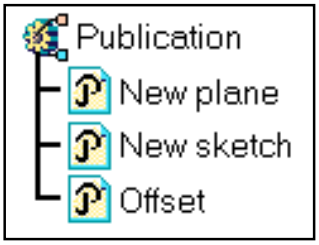

What Happens When Deleting a Published Element?

When deleting a published element, the application informs you that this element is published. What you need to do is confirm the deletion (**Yes**) or cancel it (**No**).

Using a Standard Part Contained in a Parametric Standard Part Catalog

This task explains how to use mechanical parts contained in catalogs delivered with the product. These parts are standard parts.

Dassault Systèmes does not warrant that provided data are compliant with the ISO or EN standards. For further information, please contact the AFNOR organization for ISO or EN standards (www.afnor.fr) or the ISO organization for ISO standards (www.iso.org).

Catalogs containing a limited number of parts compliant with JIS and ANSI standards are available too.

1. Select the Tools -> Mechanical Standard Parts -> XX catalogs command to access the catalog of interest. You can choose between the following caralogs:
   - EN catalogs
   - ISO catalogs
   - JIS catalogs
   - US catalogs

   The Catalog Browser dialog box displays:

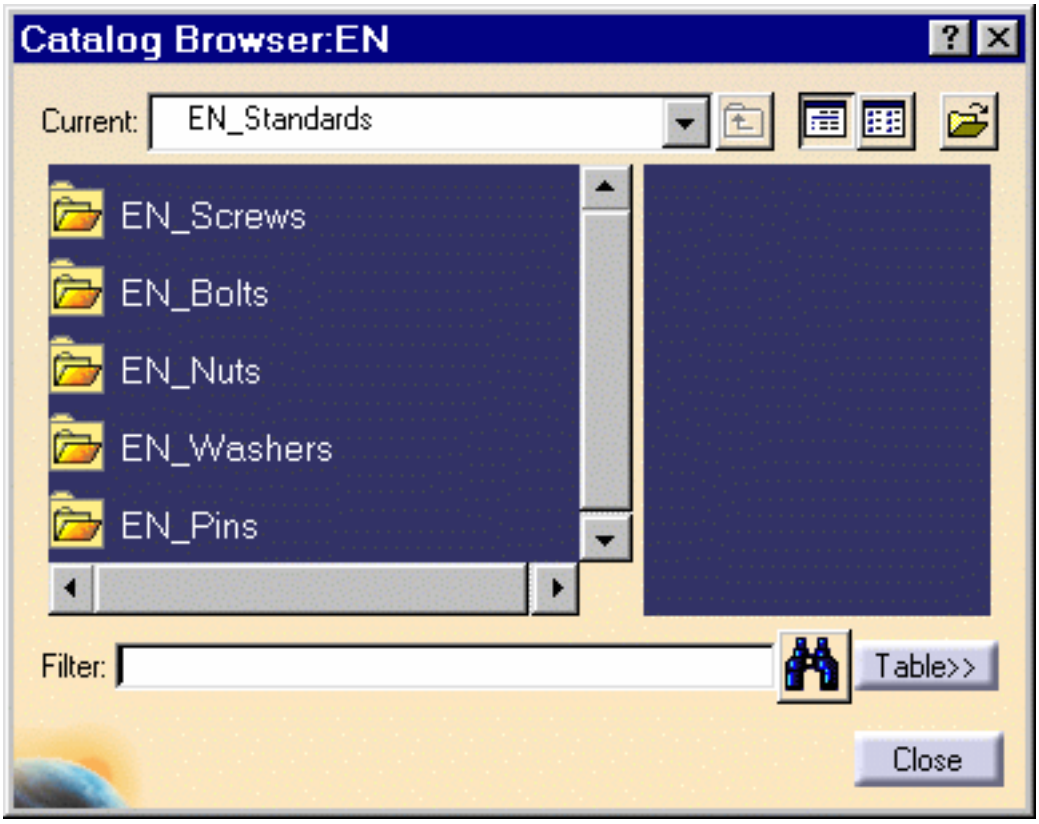

For your information, catalogs are located in these directories:

ISO:../$OS/Startup/Components/MechanicalStandardParts/ISO_Standards

EN: ../$OS/Startup/Components/MechanicalStandardParts/EN_Standards

2. Navigate through the chosen catalog.
3. Select the desired family and within this family the part you need. For example, you can instantiate in an assembly:
   - screws
   - bolts
   - nuts
   - washers
   - pins
   - keys

   This list is not exhaustive.
4. Right-click to select the Copy contextual command.
5. Select the base of your assembly.
6. Right-click to select the Paste contextual command.

   The part is copied into your assembly. Note that this part is no longer linked to the catalog.
7. Using the Save As capability, you can save this part in the directory of your choice.

Modifying a Parametric Standard Part Catalog

This task explains how to modify a catalog containing parametric parts delivered with the product.

Since Release 5 Service Pack 3, we no more use CSV files to create the EndChapters of the MechanicalStandardParts Catalogs.

To complete or modify an existing parts family:

1. Complete or modify an existing DesignTable (located in the sub-directory Design_Tables).

2. Launch an application session.

3. Select the **Tools-> Macro** command to run the macro EN_EndChapters.CATScript (for EN) located in the sub-directory VBScript.

   The dialog box that appears displays the following:

   Path of the models directory: path of the sub-directory Models.

   Path of the catalog output directory: path of the directory where the catalog documents will be created.

   You can modify the default paths in the CATScript document according to you install.

To add a new family:

1. Create the parametric CATPart.

2. Create the design table as follows: **PartNumber** in the first column, **PartName** in the second column

3. Complete the script EN_EndChapters.CATScript (for EN) with your family, remove the others and run the macro.

4. Complete the main chapters description of you catalog.

   Edit an existing CSV file (located in the sub-directory CSV) or create a new one.

   Edit the script EN.CATScript, complete it with your new Chapter and run it.

   For more about catalogs, refer to the Infrastructure User's Guide.

Creating Annotations

Create Weld Features: click this icon, select a geometrical element which represents the weld.

Create a Text With Leader: click this icon, select a face and enter your text in the dialog box.

Create a Flag Note With Leader: click this icon, select the object you want to represent the hyperlink, enter a name for the hyperlink and the path to the destination file.

Creating Weld Features

This task shows you how to set welding specifications on components. These specifications will be used later on to weld these components.

Open the Weld_Planner document.

1. Click the **Weld Feature** icon:

2. Select the edge between Green Part and Blue Part.

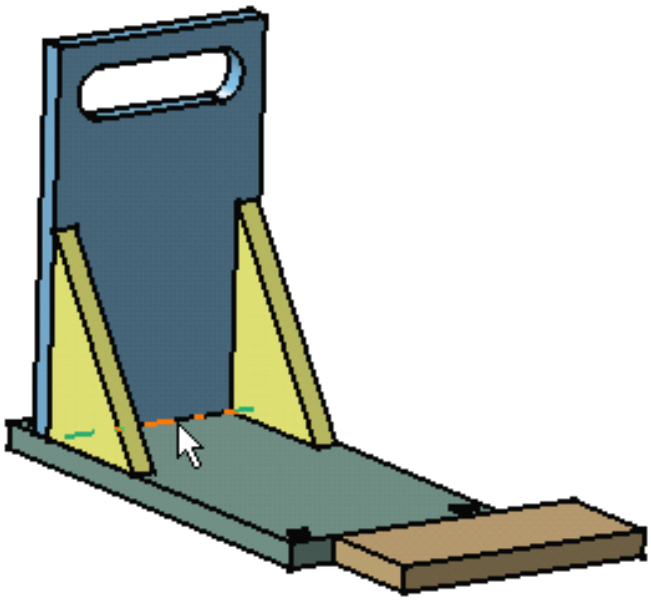

The **Welding creation** dialog box appears.

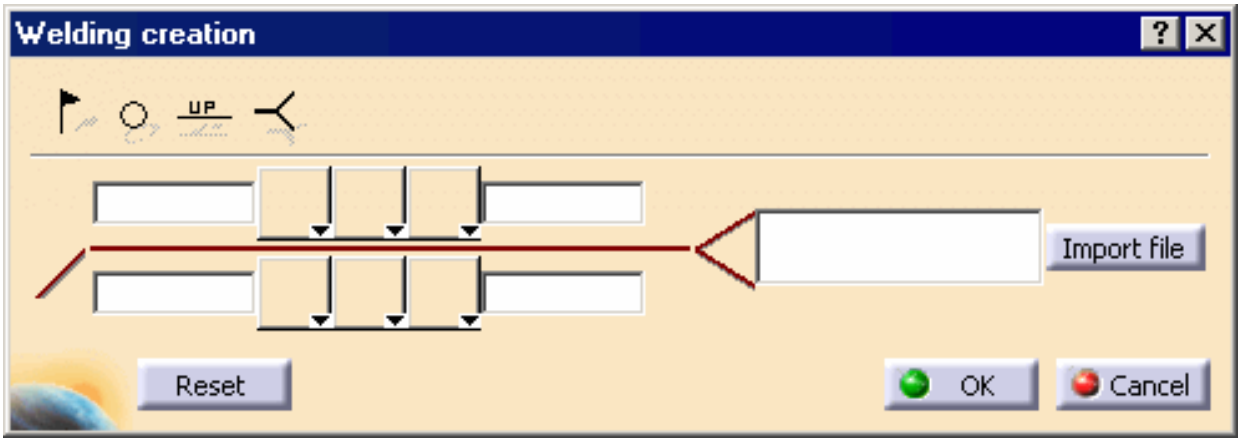

3. Enter your specifications in the **Welding Creation** dialog box. In the first entry field to the left, enter 70 as the weld length.

4. For example, set the angle symbol.

   The symbols available are:

4. For example, set the angle symbol. The symbols available are:

5. Choose among the three weld types available to set your weld type:

6. Enter 2.5 as the weld length.

7. Enter Weld 2 in the Reference entry field. This field is reserved for your own specifications or codes.

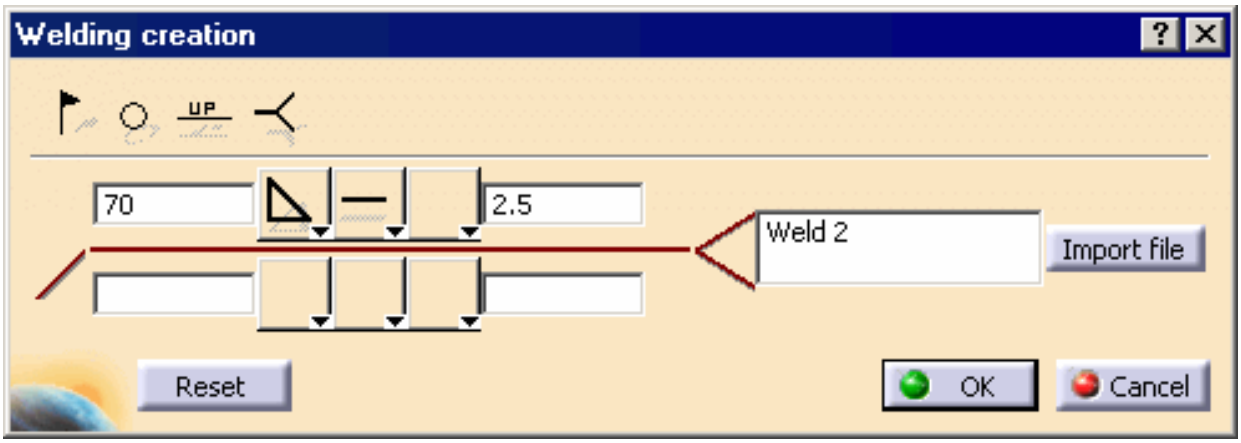

You can also import a file by clicking the Import file button. The contents of this file is then displayed in the geometry.

Note also that you can click:

the field-weld symbol (flag symbol): reserved for welds not made at the location of the initial part construction.
the weld-all-around symbol (circle circle): reserved for welds made all around the contour of the part
the "up" option: a display option. You can display the symbols and values above or below the welding symbol. It is a quick way of transferring the data from the first row to the row below and vice versa.
the indent line side
the weld tail symbol

8. Click OK to confirm.

The annotation is created in the geometry.

9. Drag and drop the annotation to move it.

You can obtain this result:

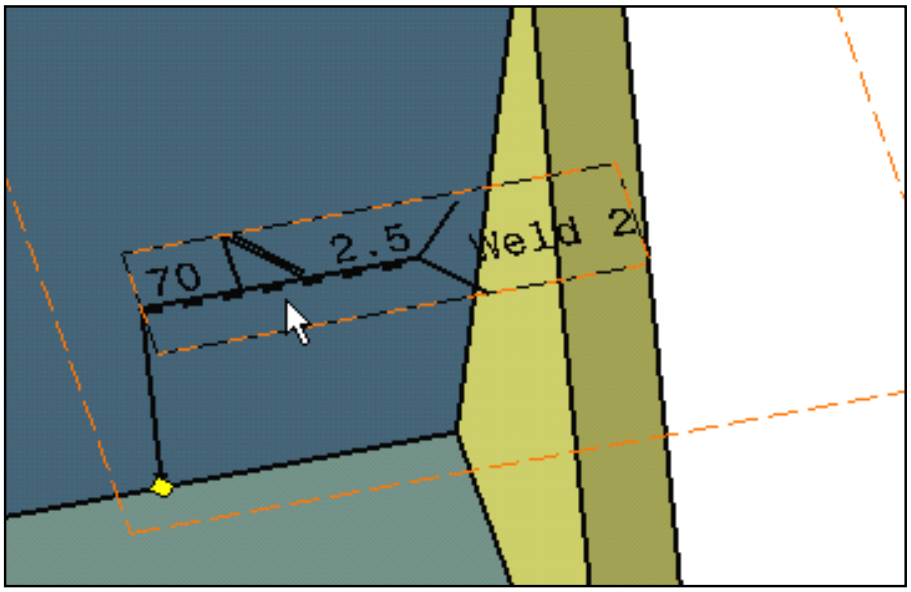

Contextual Commands

A certain number of contextual commands are available on specifications:

'Associated Geometry': manages annotation connections
'Select Views/Annotation Plane': selects the annotations of an annotation plane and the annotation plane of an annotation
'Transfer to View/Annotation Plane': transfers specifications from one view to another
'Add Leader' adds a leader to the selected specification (Right-click the specification to which you want to add a leader, select the **Add Leader** contextual command and click where you want to begin the leader).
'Annotation Links': creates or deletes positional or orientation links

Contextual commands are also available on the yellow manipulator at the extremity of the arrow end:
'Add a Breakpoint': adds a breakpoint on the leader line
'Add an Interruption': adds an interruption on the leader line
'Remove a Breakpoint': removes a breakpoint on the leader line
'Remove Leader/Extremity': removes a leader line or an extremity
'All Around': adds the All Around symbol
'Switch to perpendicular leader': sets the leader perpendicular to the annotation

For more information about those commands, please refer to the *3D Functional Tolerancing and Annotations User's Guide*.

'Symbol shape': edits the shape of the manipulator pointed at by the arrow

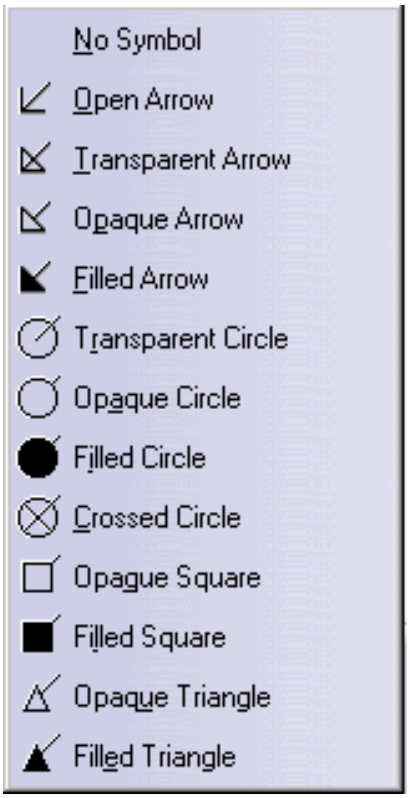

At any time, you can modify the welding symbol. For this, double-click the welding symbol to be modified and enter the modifications in the displayed dialog box.

Creating a Text with Leader

This task shows you how to create an annotation text with leader

A text is assigned an unlimited width text frame.
You can set graphic properties (anchor point, text size and justification) either before or after you create the free text.
You can change any text to another kind at any time.

Open the Common_Tolerancing_Annotations_01 CATPart document.

- Improve the highlight of the related geometry, see Highlighting of the Related Geometry for 3D Annotation.

1. Double-click the **Projected View.1** annotation plane to activate it.

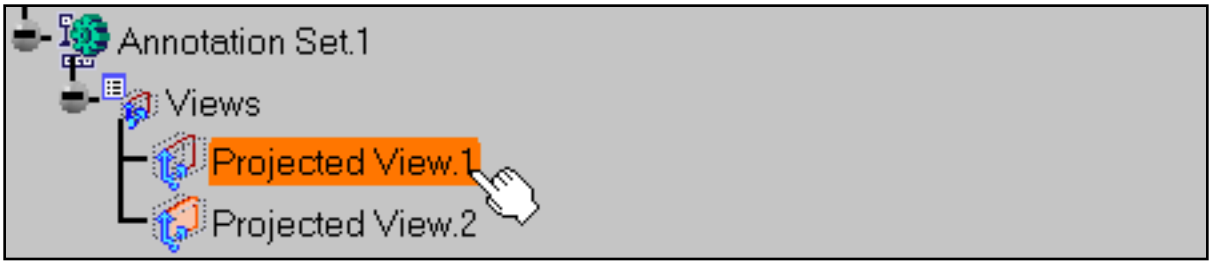

2. Click the **Text with Leader** icon:

3. Select the face as shown to define a location for the arrow end of the leader.

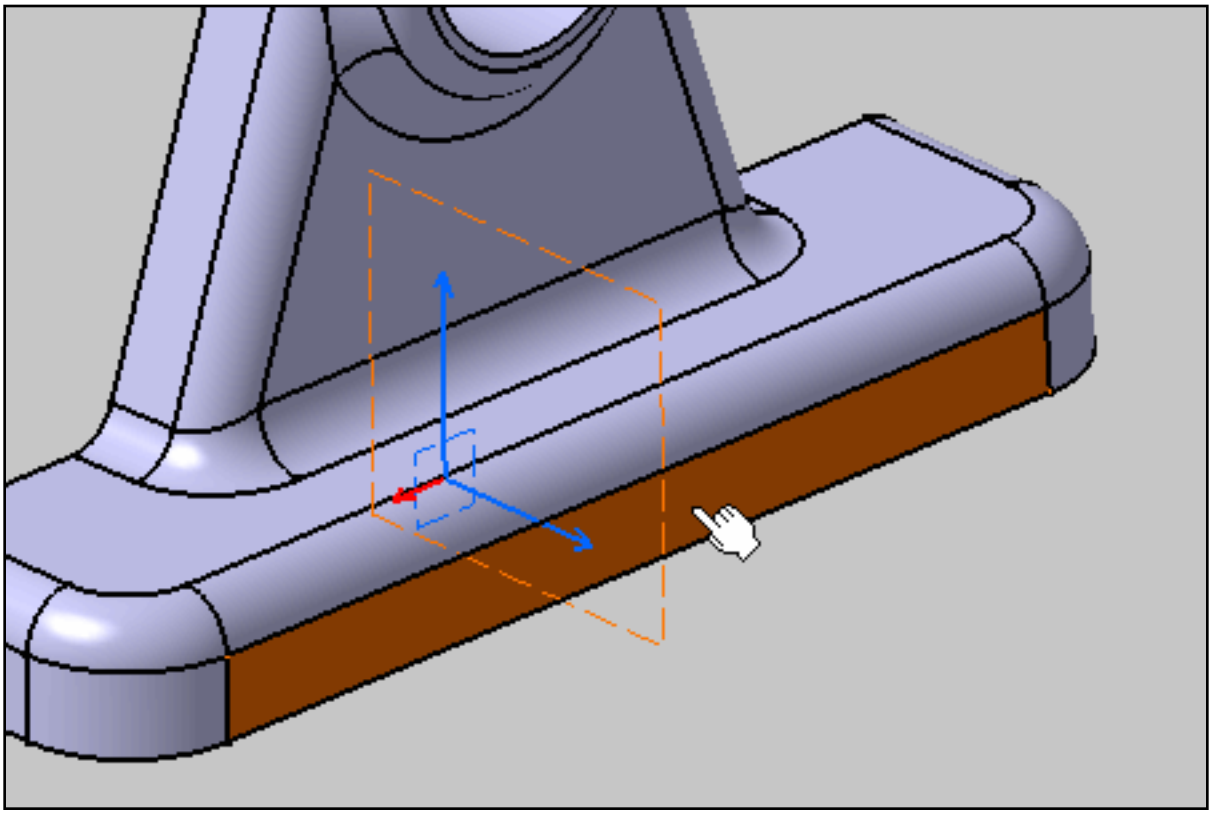

If the active view is not valid, a message appears informing you that you cannot use the active view.
Therefore, the application is going to display the annotation in an annotation plane normal to the selected face.
For more information, see View/Annotation Planes.

The **Text Editor** dialog box appears.

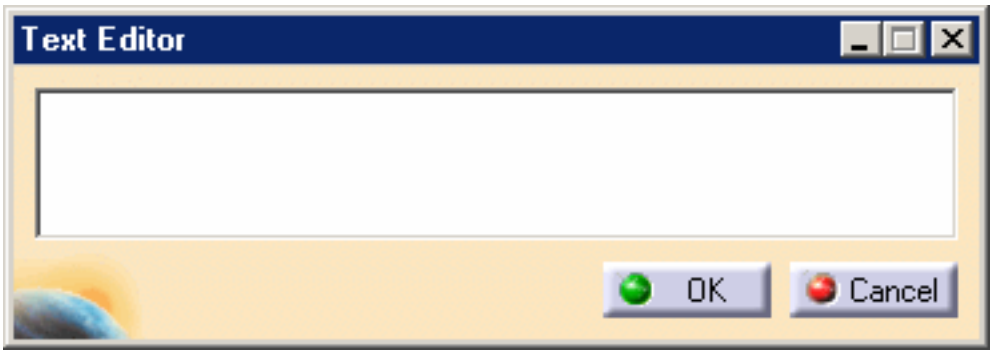

4. Enter your text, for example "New Annotation" in the dialog box.

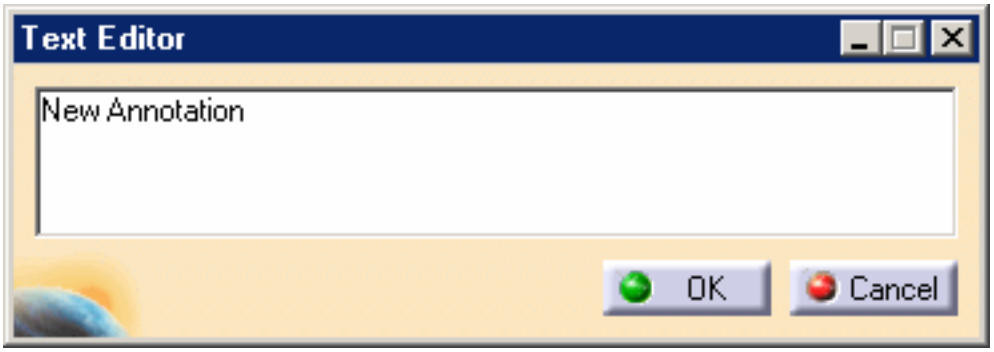

5. Click **OK** to end the text creation. You can click anywhere in the geometry area too.

The text appears in the geometry.
The text (identified as Text.xxx) is added to the specification tree.

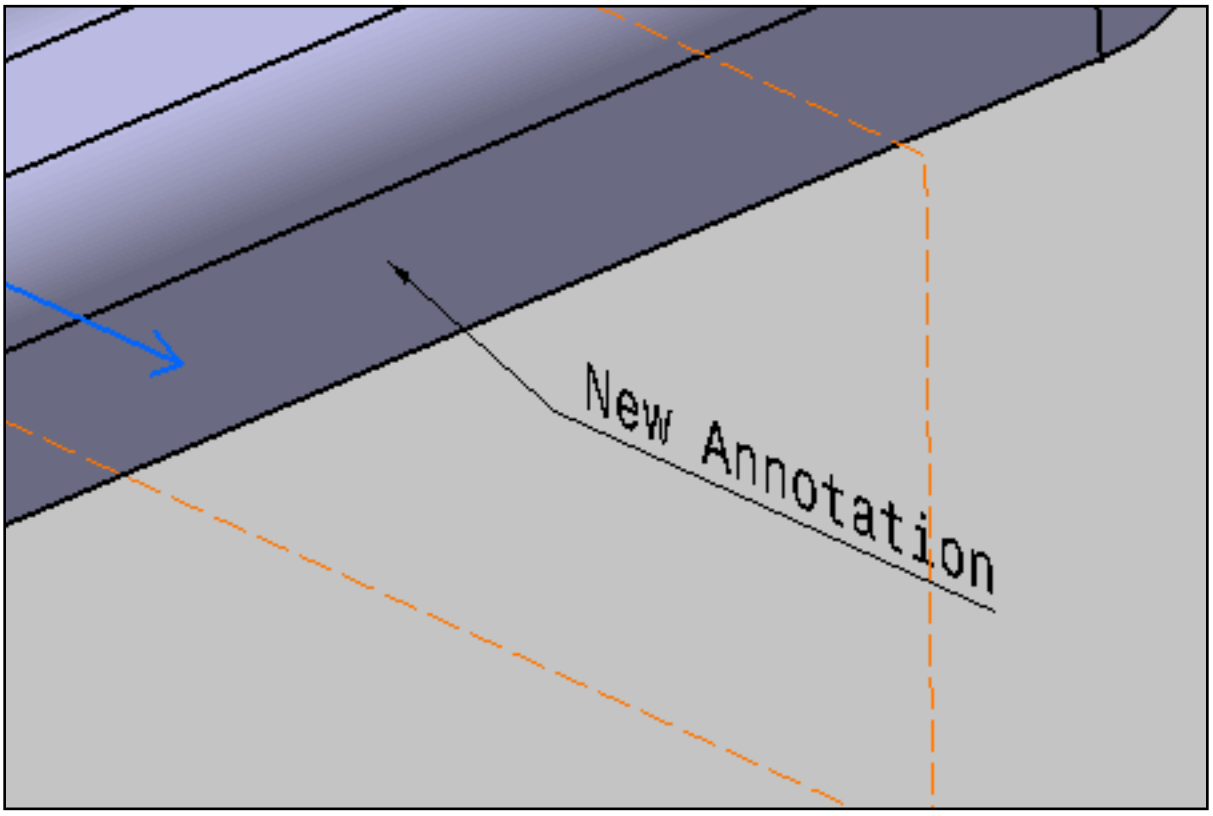

The leader is associated with the element you selected. If you move either the text or the element, the leader stretches to maintain its association with the element.

Moreover, if you change the element associated with the leader, application keeps the associativity between the element and the leader.

Note that using the **Text Properties** toolbar, you can define the anchor point, text size and justification.

You can move a text using either the drag capability.
Note also that you can resize the manipulators
For more information, refer to Customizing for 3D Functional Tolerancing & Annotations.

Creating a Flag Note with Leader

This task shows you how to create an annotation flag note with Leader.

A flag note allows you to add links to your document and then use them to jump to a variety of locations, for example to a marketing presentation, a text document or a HTML page on the intranet. You can add links to models, products and parts as well as to any constituent elements.

A flag note is assigned an unlimited width text frame.
You can set graphic properties (anchor point, text size and justification) either before or after you create the free text.
You can change any flag note to another kind at any time.

Open the Common_Tolerancing_Annotations_01 CATPart document.

- Improve the highlight of the related geometry, see Highlighting of the Related Geometry for 3D Annotation.

1. Double-click the **Projected View.1** annotation plane to activate it.

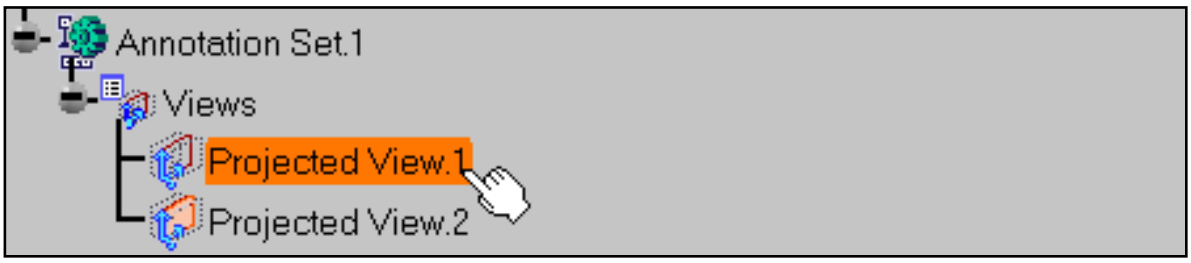

2. Click the **Flag Note with Leader** icon:

3. Select the face as shown to define a location for the arrow end of the leader.

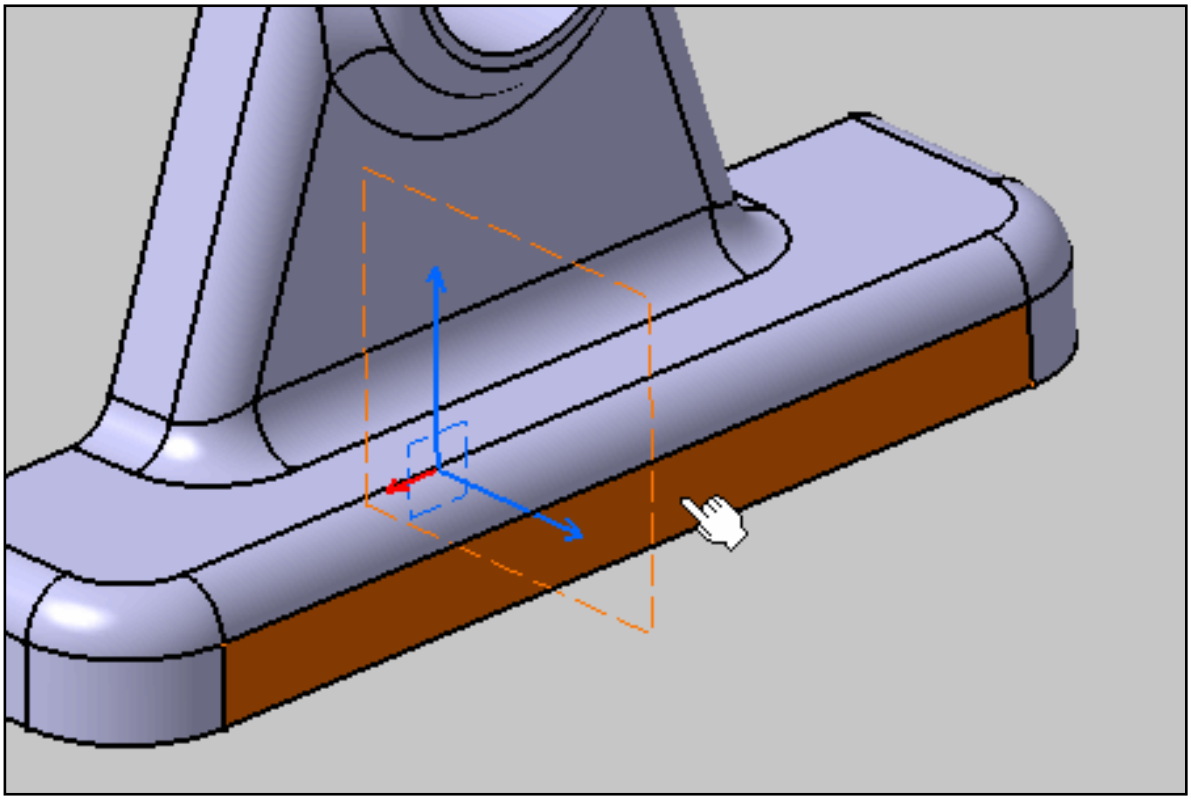

If the active view is not valid, a message appears informing you that you cannot use the active view.
Therefore, the application is going to display the annotation in an annotation plane normal to the selected face.
For more information, see View/Annotation Planes.

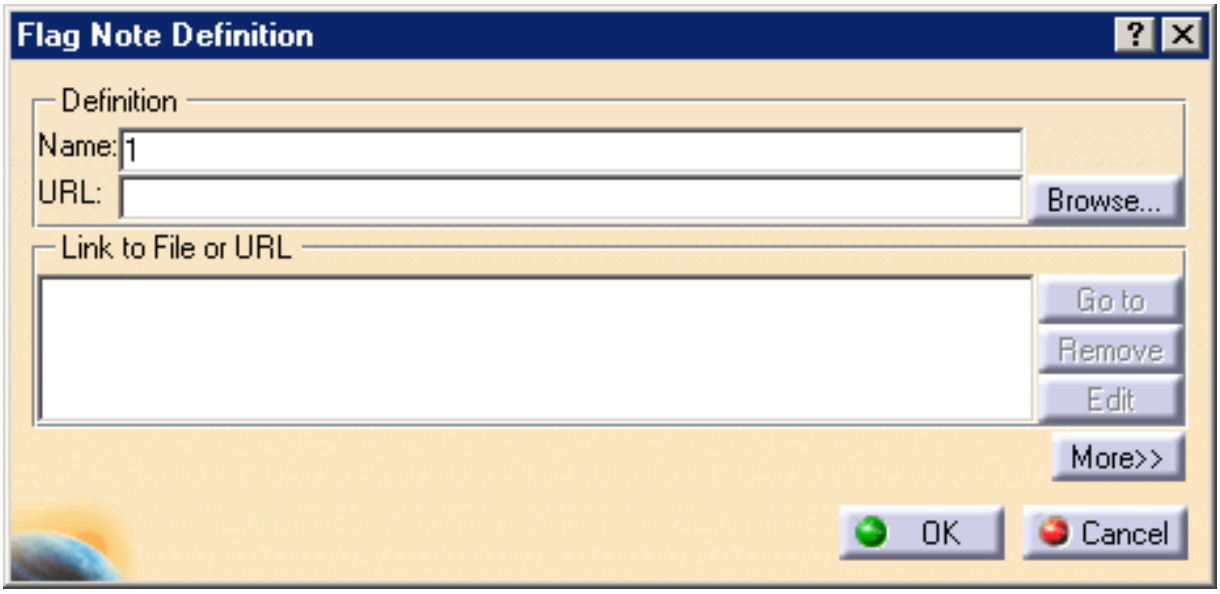

The **Manage Hyperlink** dialog box appears.

You may specify the flag note's name link in the Name field.

You may specify one or several links associated with the flag note in the URL field clicking the **Browse...** button.

In the Link to File or URL list you can see the list of links.

To activate one of them, select it and click the **Go to** button.

To remove one of them, select it and click the **Remove** button.

To edit one of them, select it and click the **Edit** button.

4. Enter your flag note name, for example "New Annotation" in the dialog box and specify a link: www.3ds.com

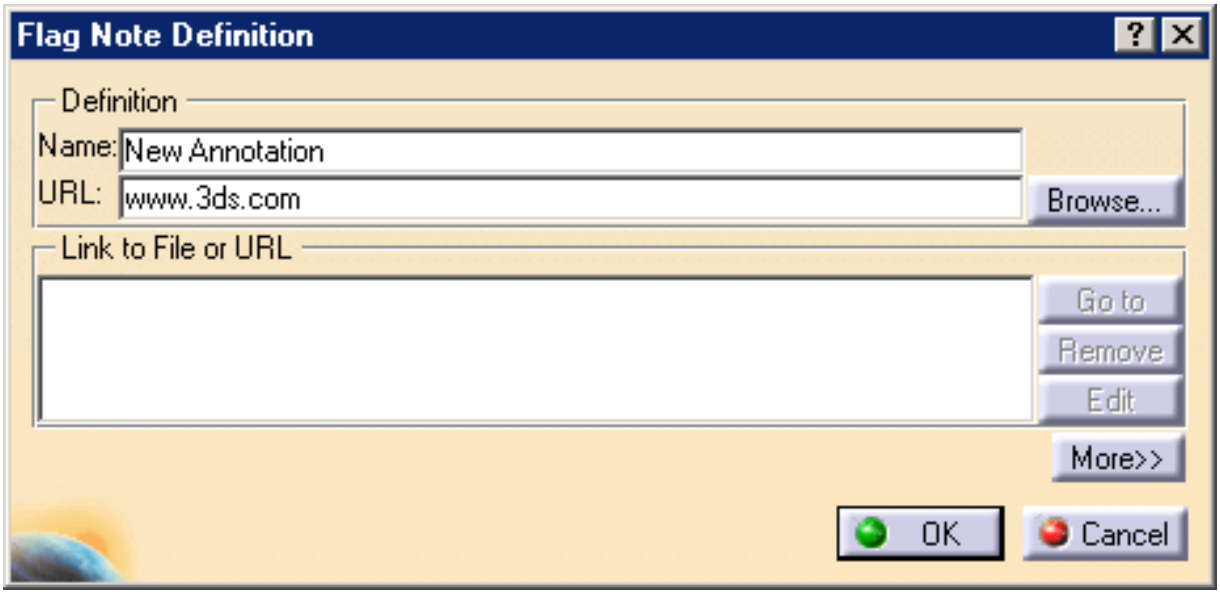

5. Click **OK** to end the flag note creation. You can click anywhere in the geometry area too.

The flag note appears in the geometry.

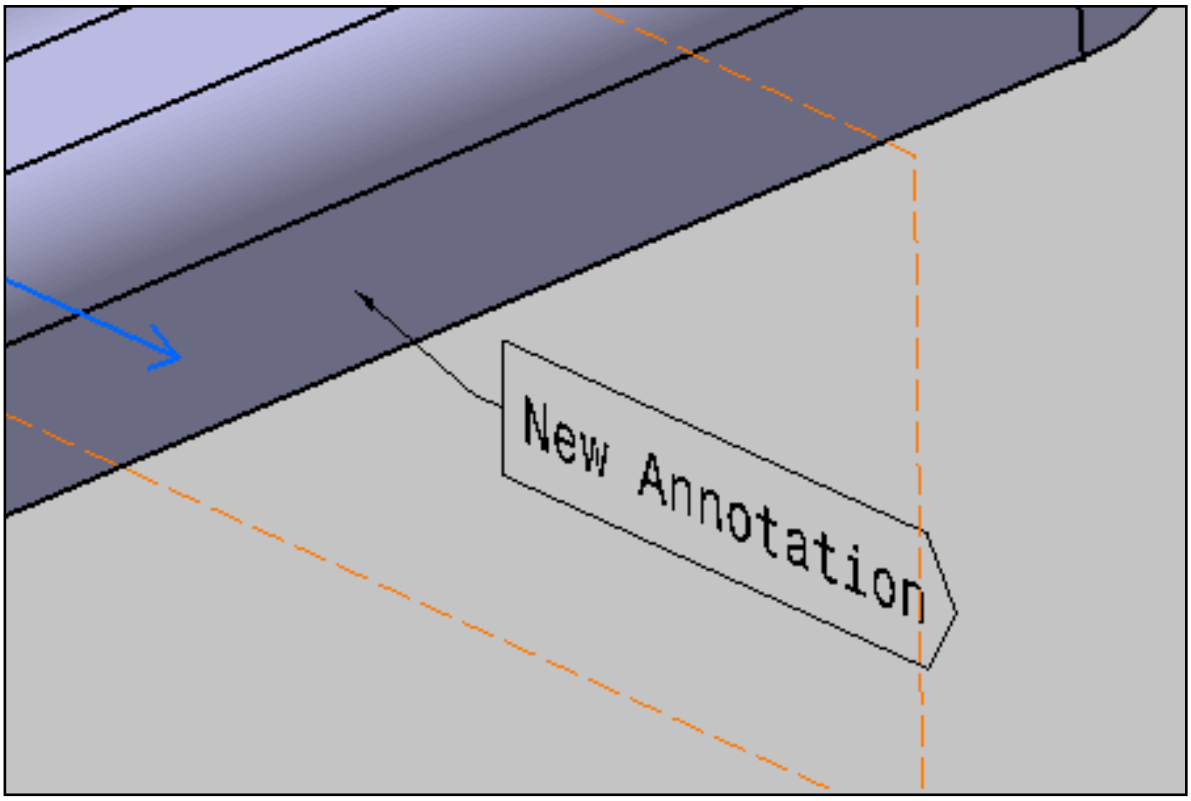

The leader is associated with the element you selected. If you move either the text or the element, the leader stretches to maintain its association with the element.

Moreover, if you change the element associated with the leader, application keeps the associativity between the element and the leader.

Note that using the **Text Properties** toolbar, you can define the anchor point, text size and justification.

The flag notes (identified as Flag Note.xxx and its name between brackets) are added to the specification tree in the **Notes** group.

You can move a flag note using either the drag capability.
Note also that you can resize the manipulators
For more information, refer to Customizing for 3D Functional Tolerancing & Annotations.

Detecting Clashes

Detect Interferences: Click the Clash icon, define the type in the Check Clash dialog box, then select the product and click Apply.

Read Clash Command Results: Run a check for interferences and read the global results in the Check Clash dialog box and Preview window.

View Results in a Dedicated Window: Run a check for interferences then click the Results window icon.

Export Clash Results: To save results in text and XML format, click the Export As icon.

Detecting Interferences

This task explains how to use the Clash command to check for interferences in your document.

Checking for interferences is done in two steps:

Initial computation: detects and identifies the different types of interference.
Detailed computation: computes the graphics representation of interferences as well as the minimum distance.

Open the AnalyzingAssembly01.CATProduct document.

1. Click the **Clash** icon.

   The Check Clash dialog box appears.

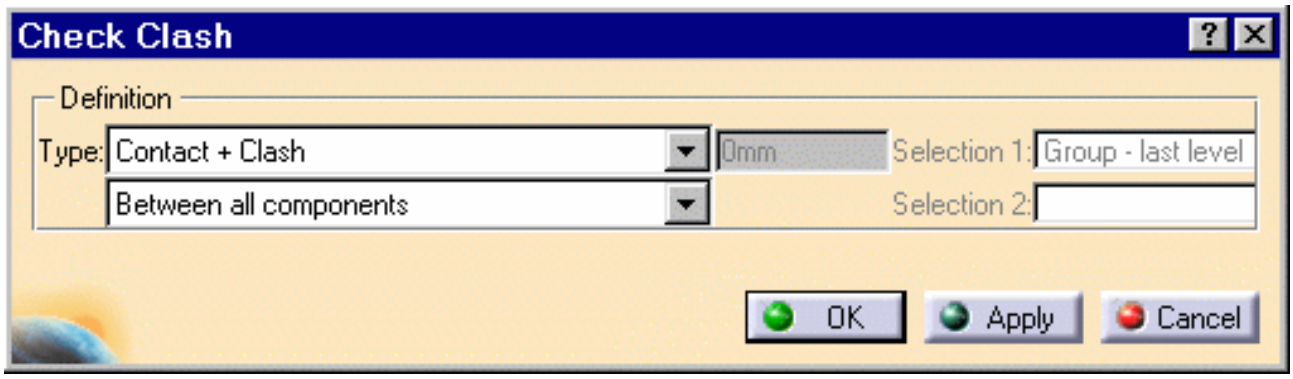

   The default interference analysis is detecting clashes and contacts between all components in the document.

   Two interference types are available:

   Contact + Clash: checks whether two products occupy the same space zone as well as whether two products are in contact (the minimum distance is less than the total sag).

   Clearance + Contact + Clash: In addition to the above, checks whether two products are separated by less than the pre-defined clearance distance.

   Results differ depending on the interference type selected for the analysis. See figure.

2. Set the interference type to Clearance + Contact + Clash.

3. Enter the desired clearance value in the field that becomes active next to the interference type. For example, enter 25mm.

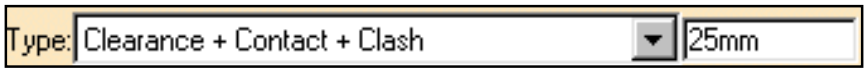

4. Activate the second Type drop-down list box and select the computation type.

Four computation types are available:

Between all components (default option): tests each product in the document against all other products.
Inside one selection: within any one selection, tests each product of the selection against all other products in the same selection.
Selection against all: tests each product in the defined selection against all other products in the document.
Between two selections: tests each product in the first selection against all products in the second selection.

5. Select the computation type to Between all components.

If you set the computation type to Between two selections, define the first selection then click to activate the second selection field (Selection 2) and select desired products.

Notes:

Any sub-assembly in the specification tree is considered a valid selection.
Continue clicking to select as many products as you want. Products are placed in the active selection. To de-select products, reselect them in the specification tree or in the geometry area.
Click in selection fields (fields turn black) to view your selections and be certain that you have selected the products you intended: selected products are highlighted.

6. Click **Apply** to check for interferences.

A progress bar is displayed letting you monitor and, if necessary, interrupt (**Cancel** option) the calculation. The Check Clash dialog box expands to show the results.

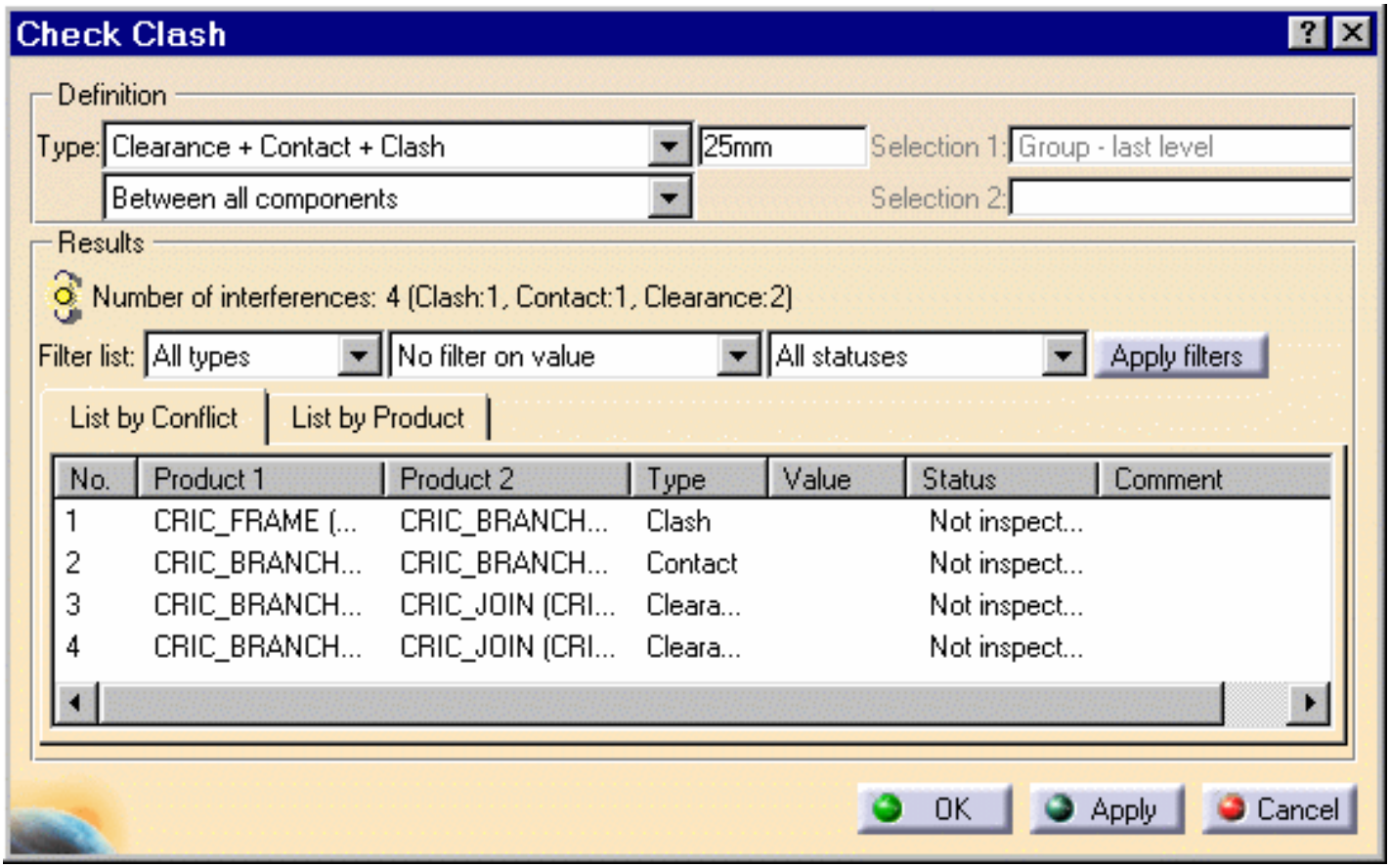

Notes:

To run another interference analysis, simply change the calculation parameters (interference type and selection) and click Apply.

To know more about Clash command results, refer to Reading Interference Results.

Reading Clash Command Results

Interference results differ depending on the interference type selected for the analysis. The following illustrates expected results for the different analysis combinations.

Clash

Given for information only. This option is not available.

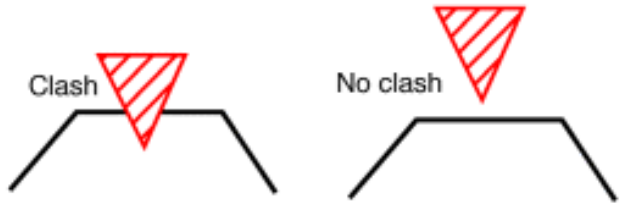

Contact + Clash

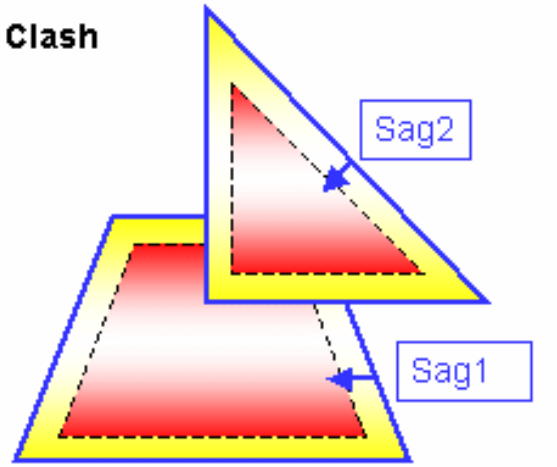

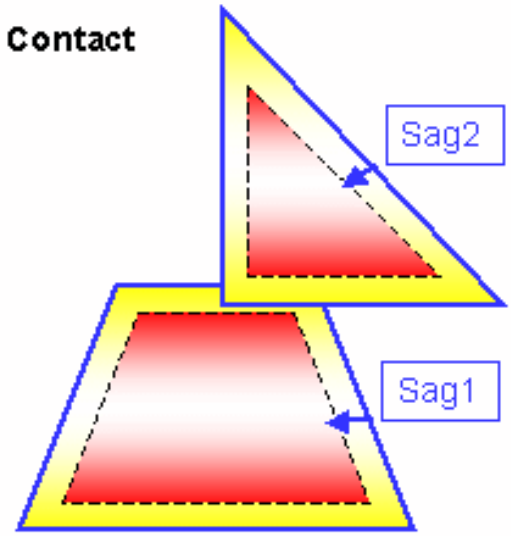

If red zones overlap, a clash is detected. If yellow zones only overlap, a contact is detected.

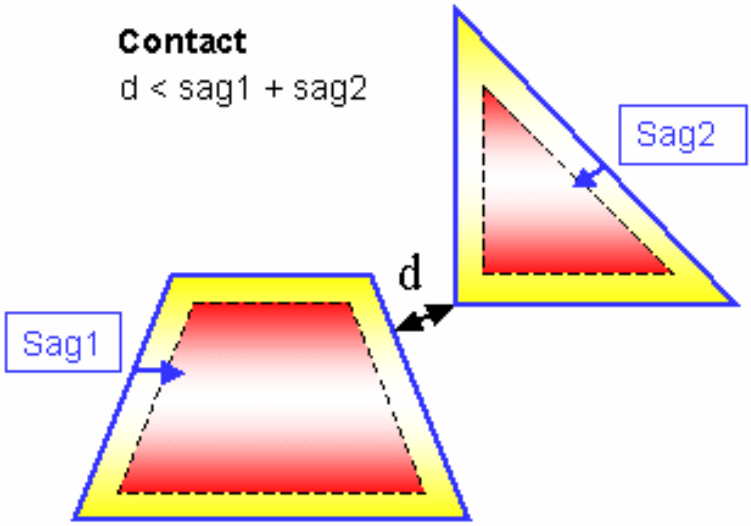

Note: sag (yellow zone) is offset from the skin inwards.

If the minimum distance between the yellow zones is less than the total sag (sag1 + sag2), a contact is detected.

Clearance + Contact + Clash

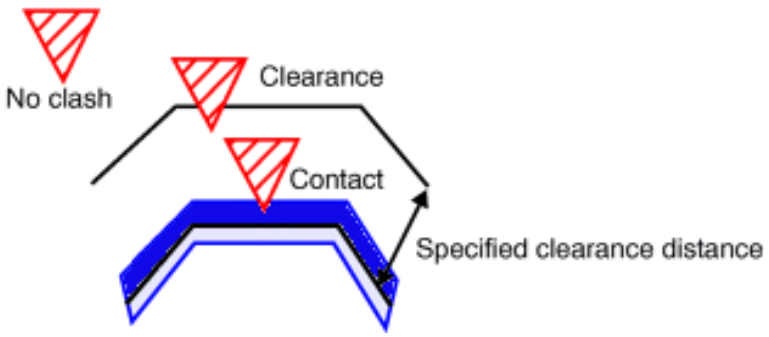

Sag

The sag corresponds to the fixed sag value for calculating tessellation on objects (3D fixed accuracy) set in the Performances tab of **Tools -> Options -> General -> Display.** By default, this value is set to 0.2 mm. The sag value set in this tab is offset from the skin inwards on both selection 1 and selection 2, .

This value is valid for both the Part to Part Clash and the Clash commands.

This task explains how to read the global results in the Check Clash dialog box and browse through them in the Preview window.

Open the AnalyzingAssembly01.CATProduct document.

1. Click the **Clash** icon and run a check of type Clearance (25mm) + Contact + Clash between all components. For more information, refer to Detecting Interferences.

   The Check Clash dialog box expands to show the results.

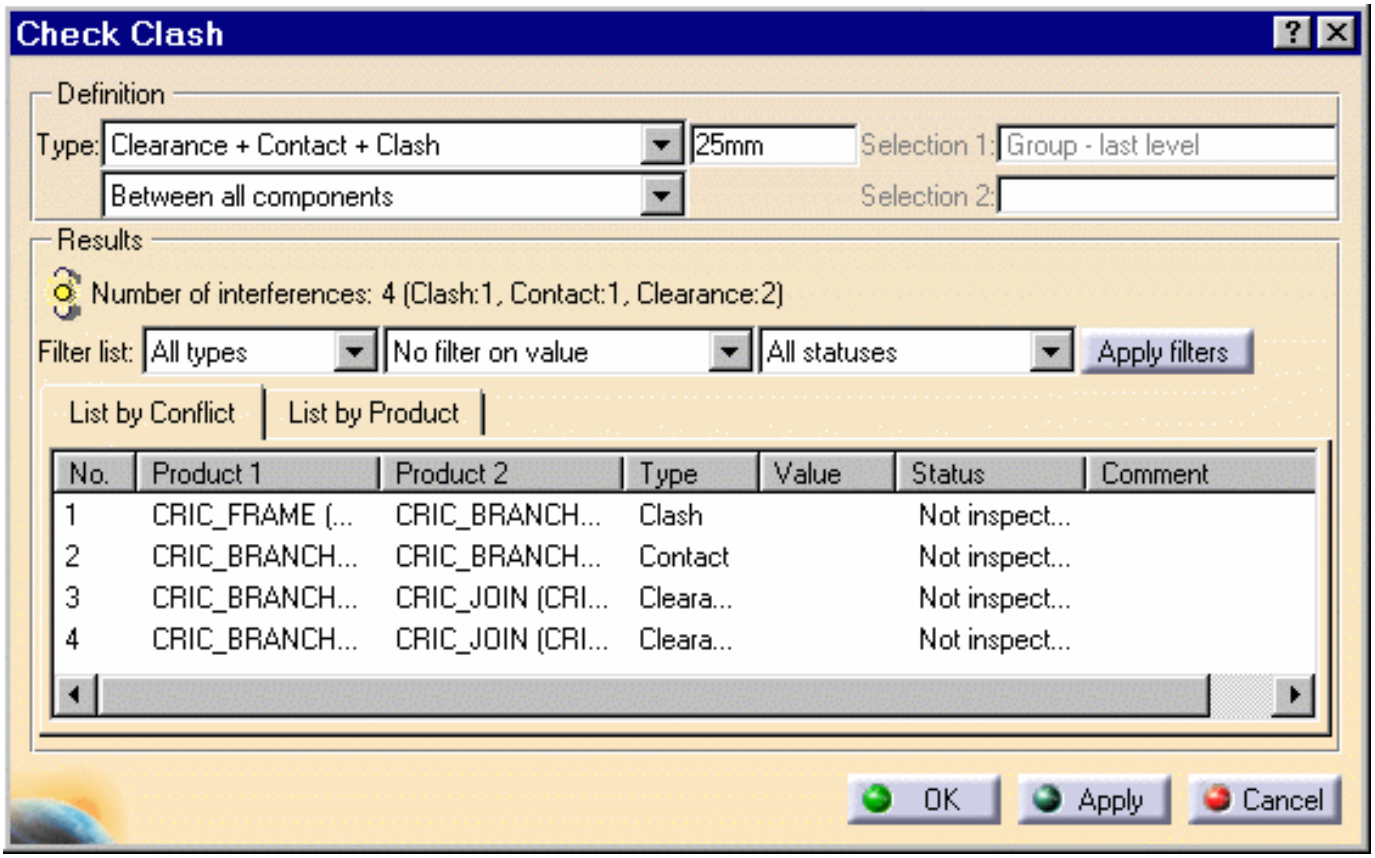

The dialog box identifies the number of interferences detected along with the type: 4 interferences have been detected.

Status lights are color-coded as follows:

red: at least one conflict is relevant
orange: no relevant conflicts, at least one conflict is Not inspected
green: all conflicts are Irrelevant.

Interference results are presented in two different ways in the dialog box:

List by Conflict tab: lists results by conflict with one conflict per line.
List by Product tab: lists results by product. There may be more than one conflict per product.

2. Select the first conflict in the list, that is a clash, to run a detailed computation.

A Preview window appears showing the products in conflict only.

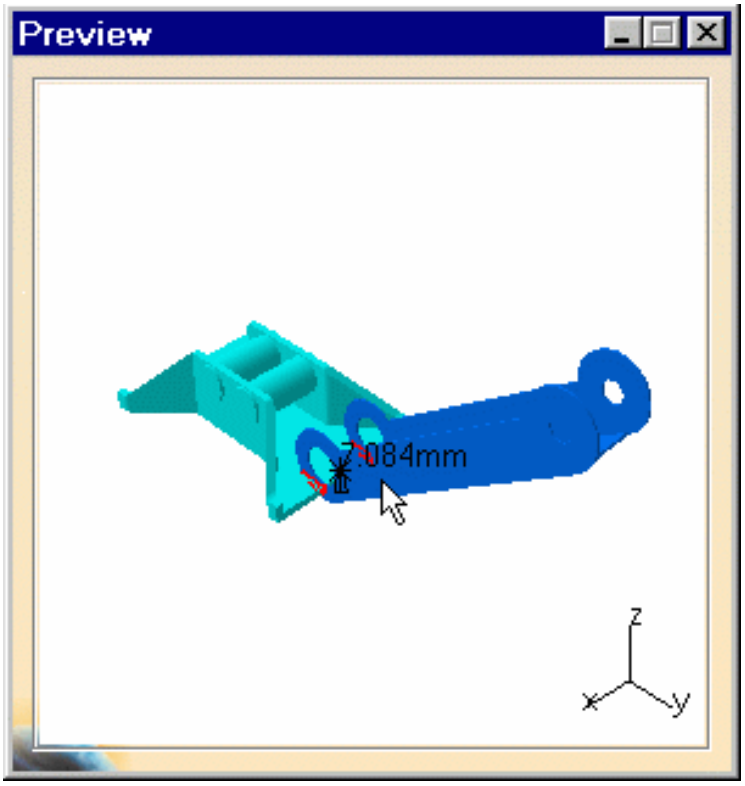

The minimum distance is specified in the dialog box and both the minimum distance and red intersection curves identify clashing products separated by less than the specified clearance distance of 25mm are displayed in the geometry area.

Color Coding for Conflicts

Clash: red intersection curves identify clashing products.
Contact: yellow triangles identify products in contact.
Clearance: green triangles identify products separated by less than the specified clearance distance.

If necessary, pan, zoom and/or rotate in the Preview window to visualize the interference better.

3. Select contact and clearances in turn in the List by Conflict tab to run a detailed computation.

As you select them, the Value and Status columns in the Check Clash dialog box, and the Preview window are updated.

4. You can also view the selected interference in a dedicated viewer. To do so, click the Results window icon in the Clash Tools toolbar.

Filtering the Display in the Dialog Box

You can filter the display of results in tabs by:

All types
Type of interference: clash, contact or clearance
Value: no filter, increasing value or decreasing value.
Status: all, not inspected, relevant, irrelevant. Until selected, all interferences are reported not inspected. Inspected interferences can be relevant or irrelevant

5. Set Clearance as the filter type.

6. Click Apply filters to update the display.

7. To change the status of an inspected conflict, click the status field of the appropriate conflict.

   The conflict status changes from relevant to irrelevant and vice-versa depending on the initial value.

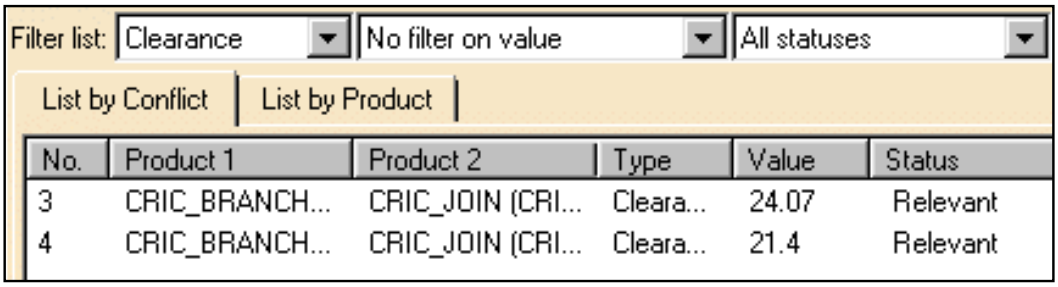

8. You can also add comments to selected conflicts: Click the Comment field.

   The Comment dialog box appears.

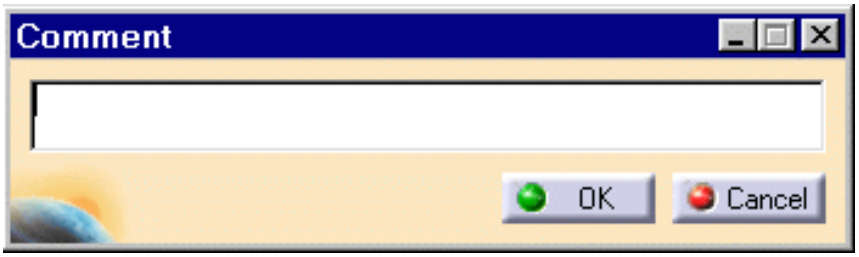

9. Enter your comment, for example "Test" and click OK.

10. Click the List by Product tab to display conflicts associated with products.

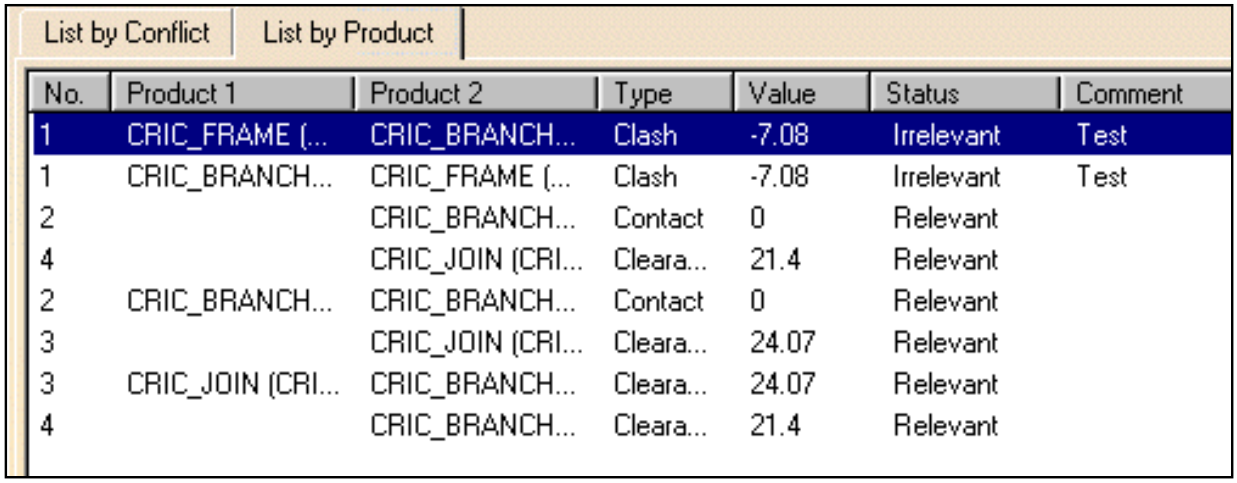

Results are organized by product in the List by Product tab. There may be more than one conflict per product.

Viewing Results in a Dedicated Window

This task explains how to view selected interferences in a separate viewer.

Open the AnalyzingAssembly01.CATProduct document.

1. Click the **Clash** icon and run a check of type Clearance (25mm) + Contact + Clash between all components. For more information, refer to Detecting Interferences.

   The Check Clash dialog box expands to show the results of the initial computation. The first interference is selected by default and a detailed computation has been run.

2. Close the Preview window.

3. Click the **Results window** icon in the Clash Tools toolbar to view the selected interference in a dedicated viewer.

   The Interference Results.1 window opens.

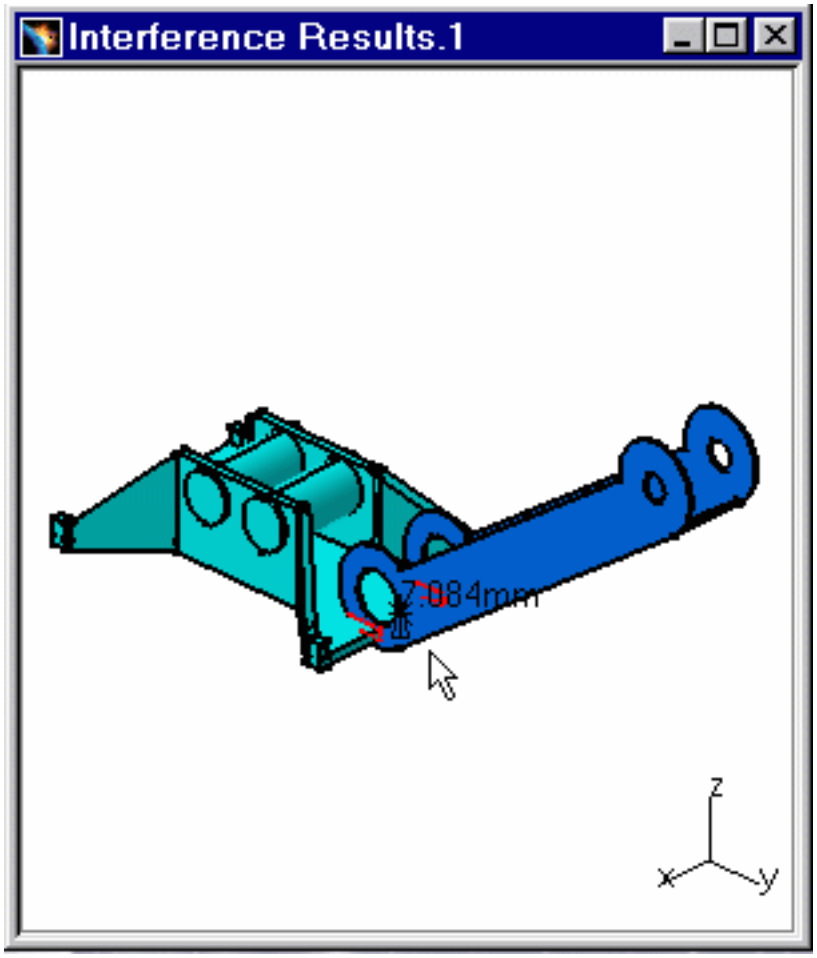

Color Coding for Conflicts

Clash: red intersection curves identify clashing products.
Contact: yellow triangles identify products in contact.
Clearance: green triangles identify products separated by less than the specified clearance distance.

Object viewing commands and commands in the Window menu are available in this window. You can, for example, tile the Interference results window and the original document window vertically or horizontally.

4. For example, select Window -> Tile Vertically from the menu bar to organize the open windows vertically.

5. Click OK in the Check Clash dialog box to exit when done.

Exporting Clash Results

This task explains how to export clash results to a text file and publish clash results to an XML file.

Open the AnalyzingAssembly01.CATProduct document.

1. Click the **Clash** icon and run a check of type Clearance (25mm) + Contact + Clash between all components. For more information, refer to Detecting Interferences.

   The Check Clash dialog box expands to show the results of the initial computation.

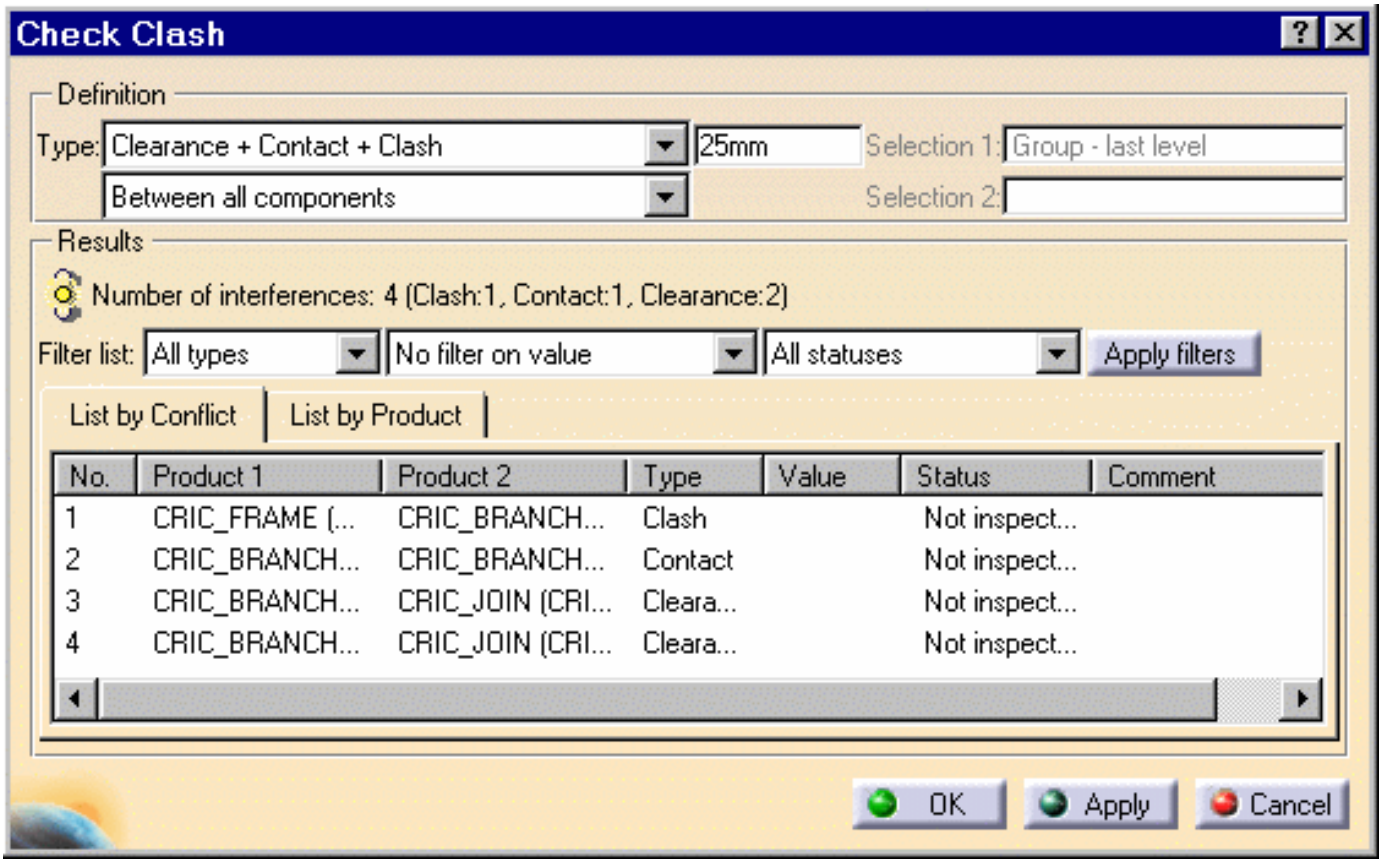

2. Browse through results using the Results viewer.

3. To publish results to an XML file, click the Export As icon in the Clash Tools toolbar:

   The Export As dialog box is displayed:

   Set Type to XML (Extensible Markup Language): a standard format that can be used as a simple way to exchange data.
   Identify the folder in which you want to save the file.
   Enter a file name.
   Click Save to publish the results.

Note: Each time you export results, a folder containing all necessary files and images is created.

4. Open your browser and read the results.

5. Click the interference (computation result table) in the browser to jump to the part of the page displaying the selected interference and appropriate results.

Notes:

The viewpoints set when visualizing the interferences in the Results window are saved and exported along with the clash results.

Any filters applied to the results in the dialog box are taken into account so you can use the filters to export only pertinent results.

6. To write results to a text file, click the Export As icon in the Clash Tools toolbar:

The Export As dialog box is displayed.

Set Type to *.txt
Identify the folder in which you want to save the file.
Enter a file name.
Click Save to save the results in a text file.

7. Click OK to exit when done.

Sectioning

About Sectioning

Creating Section Planes: Click the icon.

Creating 3D Section Cuts: Create a section plane then click the icon.

Manipulating Section Planes Directly: Create a section plane, drag plane edges to re-dimension, drag plane to move it along the normal vector, press and hold left and middle mouse buttons down to move plane in U, V plane or local axis system or drag plane axis to rotate plane.

Positioning Planes on a Geometric Target: Create a section plane, click the icon then point to the target of interest.

Positioning Planes Using the Edit Position and Dimensions Command: Create a section plane, click the icon and enter parameters defining the plane position in the dialog box.

More About the Section Viewer: Create a section plane then click the icon.

About Sectioning

Using cutting planes, you can create sections, section slices, section boxes as well as 3D section cuts of your products automatically.

Creating section slices and section boxes are DMU-P2 functionalities.

The Section Plane

The section plane is created parallel to absolute coordinates Y, Z. The center of the plane is located at the center of the bounding sphere around the products in the selection you defined.

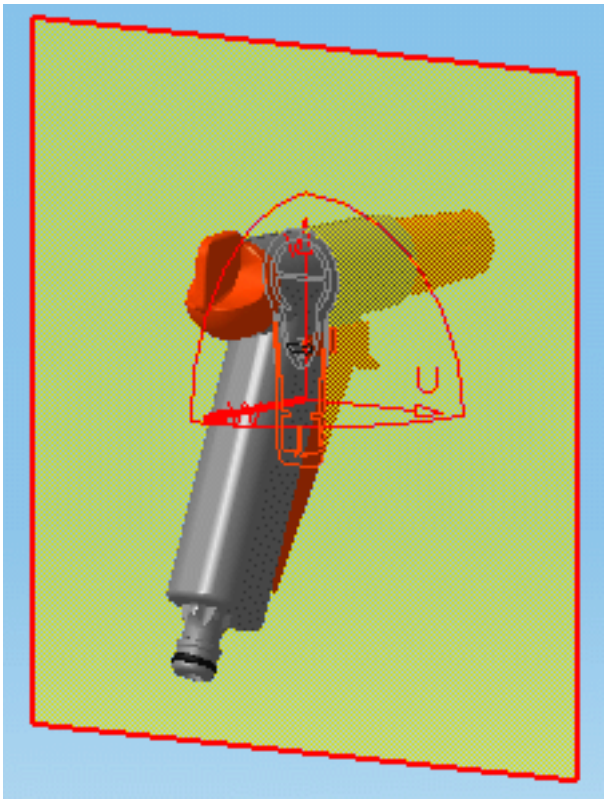

- Line segments represent the intersection of the plane with all surfaces and volumes in the selection. By default, line segments are the same color as the products sectioned.

- Points represent the intersection of the plane with any wireframe elements in the selection, and are visible in both the document window and the Section viewer.

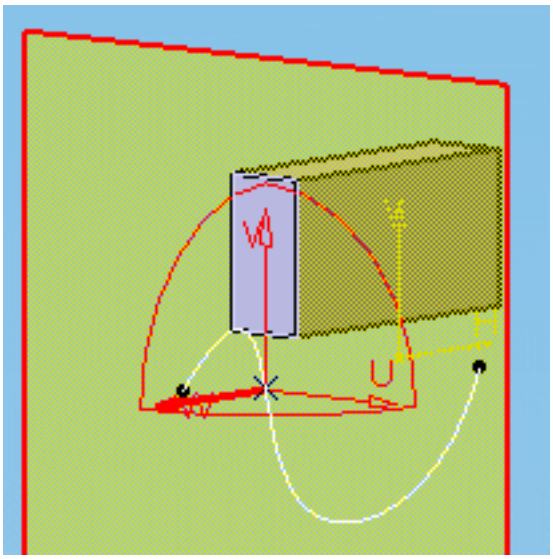

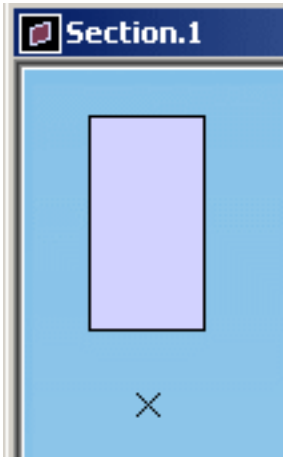

Notes:

- Any surfaces or wireframe elements in the same plane as the section plane are not visible.
- If no selection is made before entering the command, the plane sections all products.

In DMU-P1, you cannot select products to be sectioned: the plane sections all products.

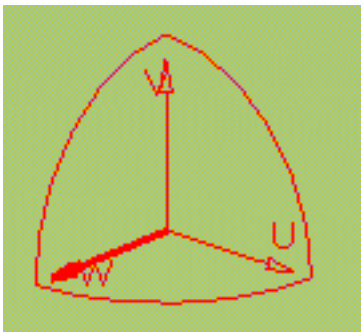

A plane has limits and its own local axis system. The letters U, V and W represent the axes. The W-axis is the normal vector of the plane.

You can customize settings to locate the center and orient the normal vector of the plane as well as de-activate the default setting taking wireframe elements into account. This is done using the **Tools ->Options..., Digital Mockup ->DMU Space Analysis** command (DMU Sectioning tab).

Manipulating the Plane

Sectioning is dynamic (moving the plane gives immediate results). You can manipulate the cutting plane in a variety of ways:

- Directly
- Position it with respect to a geometrical target, by selecting points and/or lines
- Change its current position, move and rotate it using the Edit Position and Dimensions command.

Section Results

Results differ depending on the sag value used.

Using default value (0.2mm):

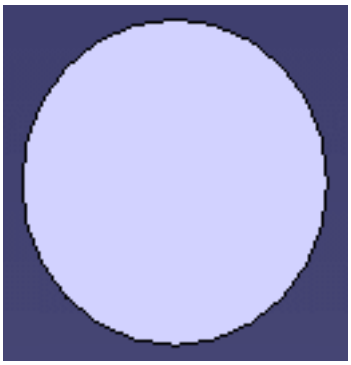

Using a higher value:

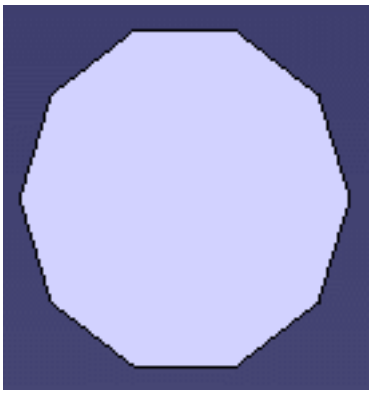

Sag corresponds to the fixed sag value for calculating tessellation on objects (3D fixed accuracy) set in the Performance tab of **Tools -> Options -> General -> Display**. By default, this value is set to 0.2 mm.

In Visualization mode, you can dynamically change the sag value for selected objects using the **Tools -> Modify SAG** command.

The 3D Section Cut

3D section cuts cut away the material from the cutting plane to expose the cavity within the product, beyond the slice or outside the box.

Creating Groups of Products

In DMU-P2, prior to creating your section plane, you can create a group containing the product(s) of interest using the Group icon in the DMU Space Analysis toolbar or **Insert -> Group...** in the menu bar.

Groups created are identified in the specification tree and can be selected from there for sectioning. Only one group per selection can be defined.

Creating Section Planes

This task shows how to create section planes and orient the normal vector of the plane.

Insert the following cgr files: ATOMIZER.cgr, BODY1.cgr, BODY2.cgr, LOCK.cgr, NOZZLE1.cgr, NOZZLE2.cgr, REGULATION_COMMAND.cgr, REGULATOR.cgr, TRIGGER.cgr and VALVE.cgr.

They are to be found in the online documentation filetree in the common functionalities sample folder **cfysm/samples**.

1. Select **Insert -> Sectioning** from the menu bar, or click the Sectioning icon in the DMU Space Analysis toolbar to generate a section plane.

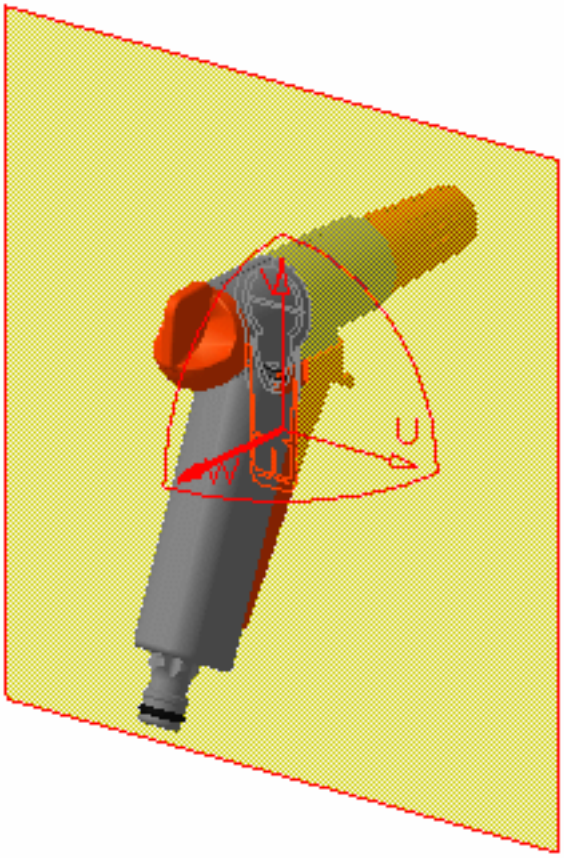

The section plane is automatically created. If no selection is made before entering the command, the plane sections all products. If products are selected, the plane sections selected products.

P1 Functionality

In DMU-P1, you cannot select products to be sectioned: the plane sections all products.

The Section Plane

The plane is created parallel to absolute coordinates Y,Z. The center of the plane is located at the center of the bounding sphere around the products in the selection you defined.

- Line segments represent the intersection of the plane with all surfaces and volumes in the selection. By default, line segments are the same color as the products sectioned.
- Points represent the intersection of the plane with any wireframe elements in the selection.

A section plane has limits and its own local axis system. U, V and W represent the axes. The W-axis is the normal vector of the plane. The contour of the plane is red.

You can dynamically re-dimension and reposition the section plane. For more information, see Manipulating Section Planes Directly.

Using the **Tools ->Options...** command (DMU Sectioning tab under **Digital Mockup ->DMU Space Analysis**, you can change the following default settings:

- Location of the center of the plane
- Orientation of the normal vector of the plane
- Sectioning of wireframe elements.

P2 Functionalities

In DMU-P2, you can create as many independent section planes as you like.

Results Window

A Section viewer is automatically tiled vertically alongside the document window. It displays a front view of the generated section and is by default, locked in a 2D view.

Notice that the section view is a filled view. This is the default option. The fill capability generates surfaces for display and measurement purposes (area, center of gravity, etc.).

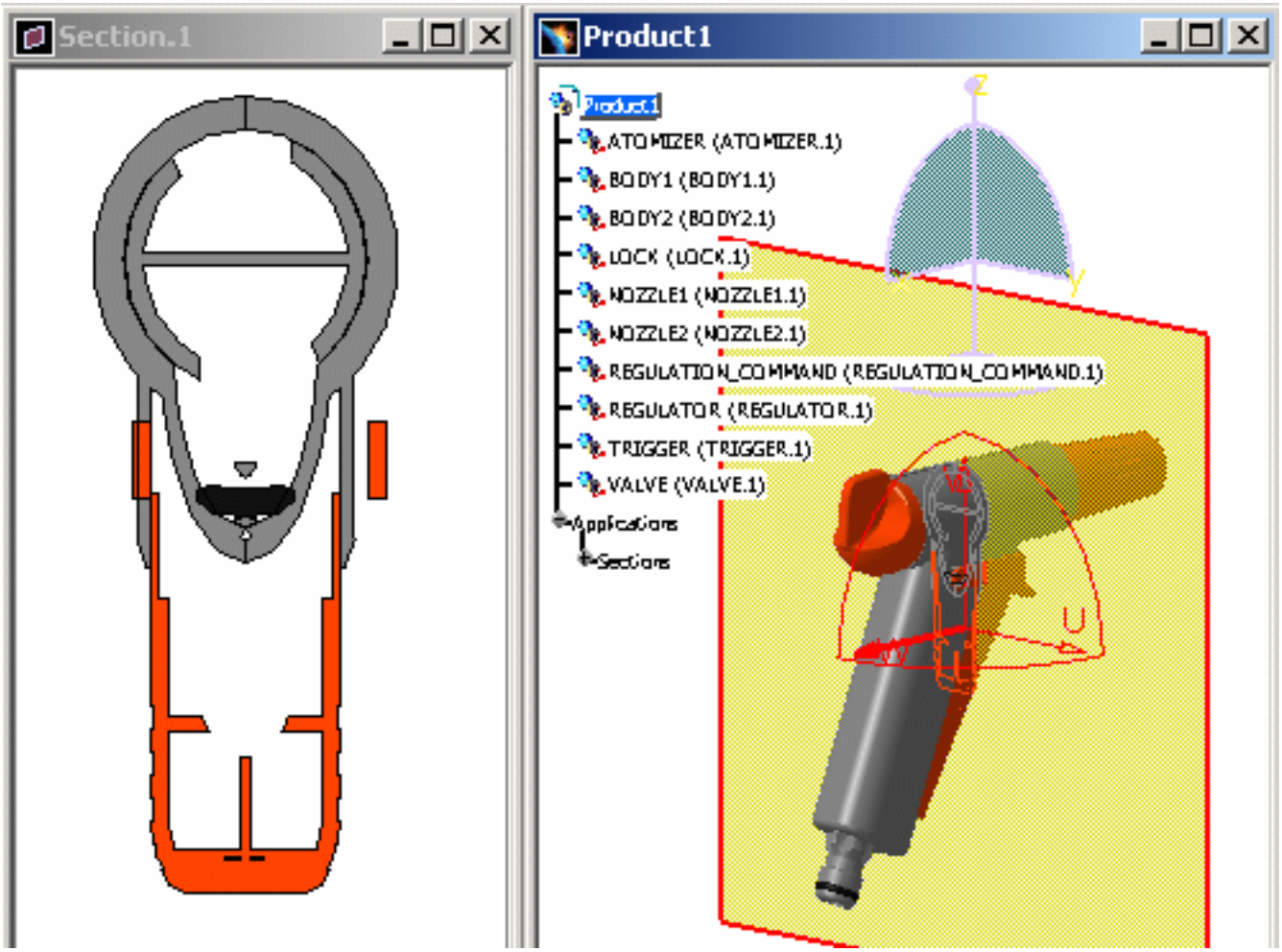

Sectioning Definition Dialog Box

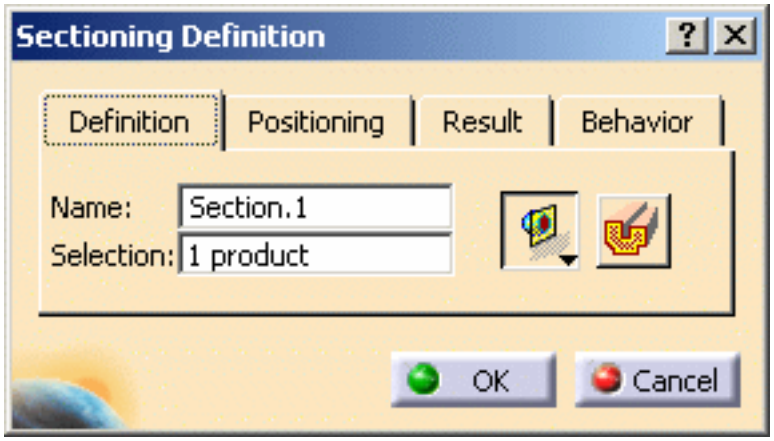

The Sectioning Definition dialog box appears.

This dialog box contains a wide variety of tools letting you position, move and rotate the section plane as well as create slices, boxes and section cuts. For more information, see Positioning Planes with respect to a Geometrical Target, Positioning Planes Using the Edit Position Command, Creating Section Slices, Creating Section Boxes and Creating 3D Section Cuts.

P2 Functionalities

Creating section slices and section boxes are DMU-P2 functionalities.

2. Click the Selection box to activate it.
3. Click products of interest to make your selection, for example the TRIGGER and BODY1.

Products selected are highlighted in the specification tree and geometry area.

Note: Simply continue clicking to select as many products as you want. Products will be placed in the active selection. To de-select products, reselect them in the specification tree or in the geometry area.

The plane now sections only selected products.

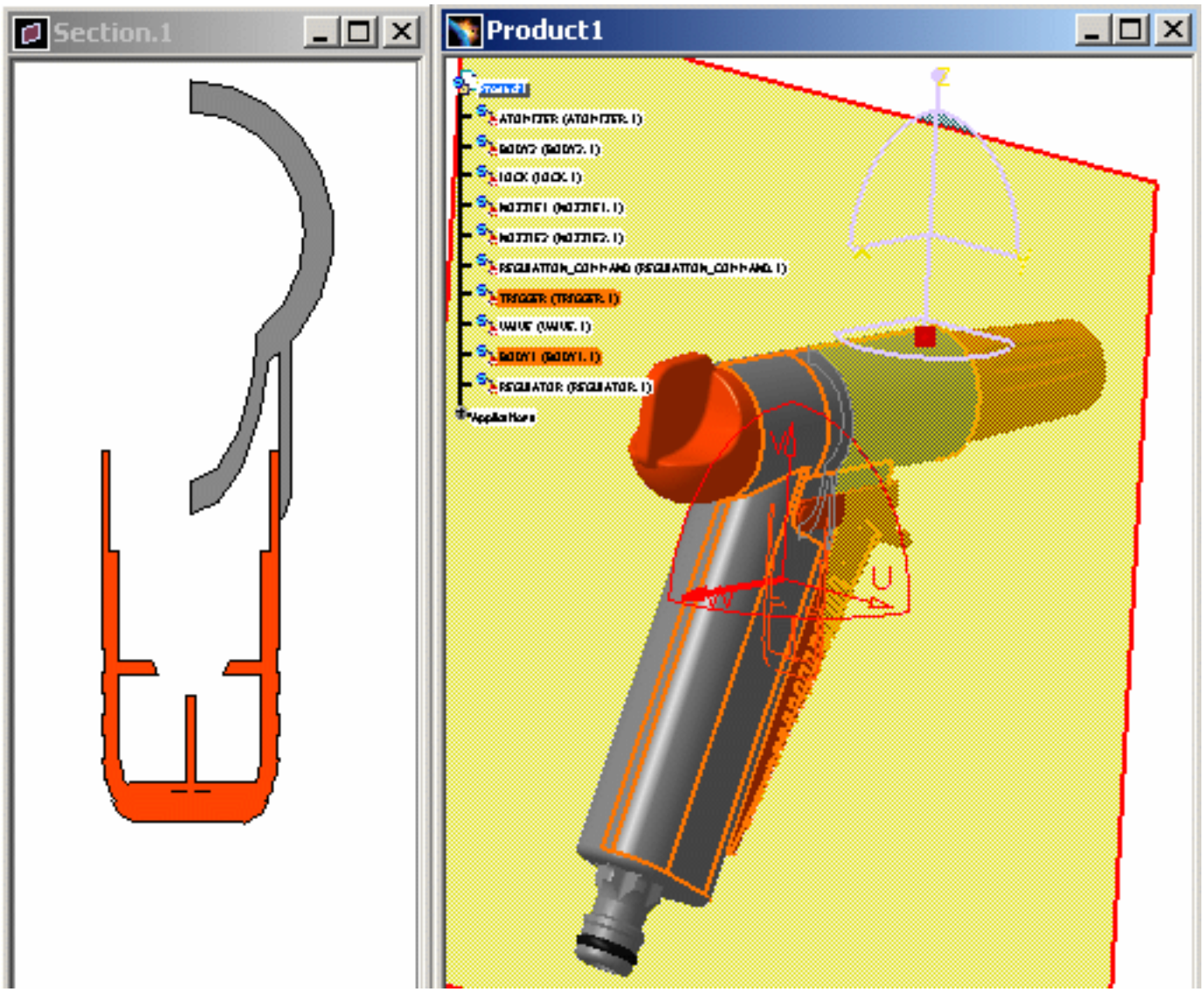

You can change the current position of the section plane with respect to the absolute axis system of the document:

4. Click the Positioning tab in the Sectioning Definition dialog box.

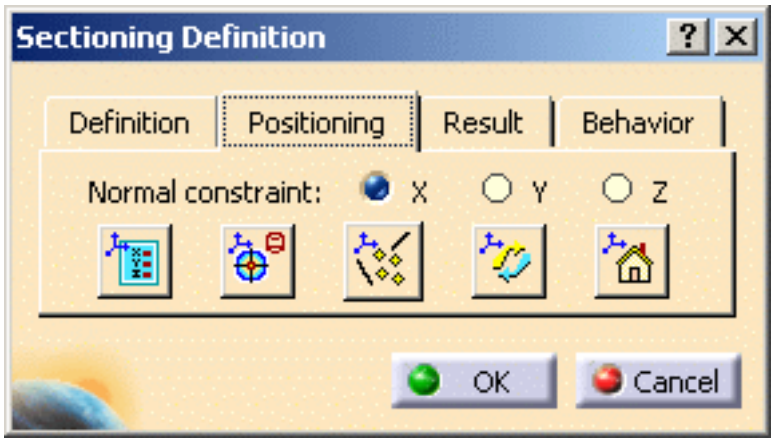

5. Select X, Y or Z radio buttons to position the normal vector (W-axis) of the plane along the selected absolute system axis.

Select Z for example. The plane is positioned perpendicular to the Z-axis.

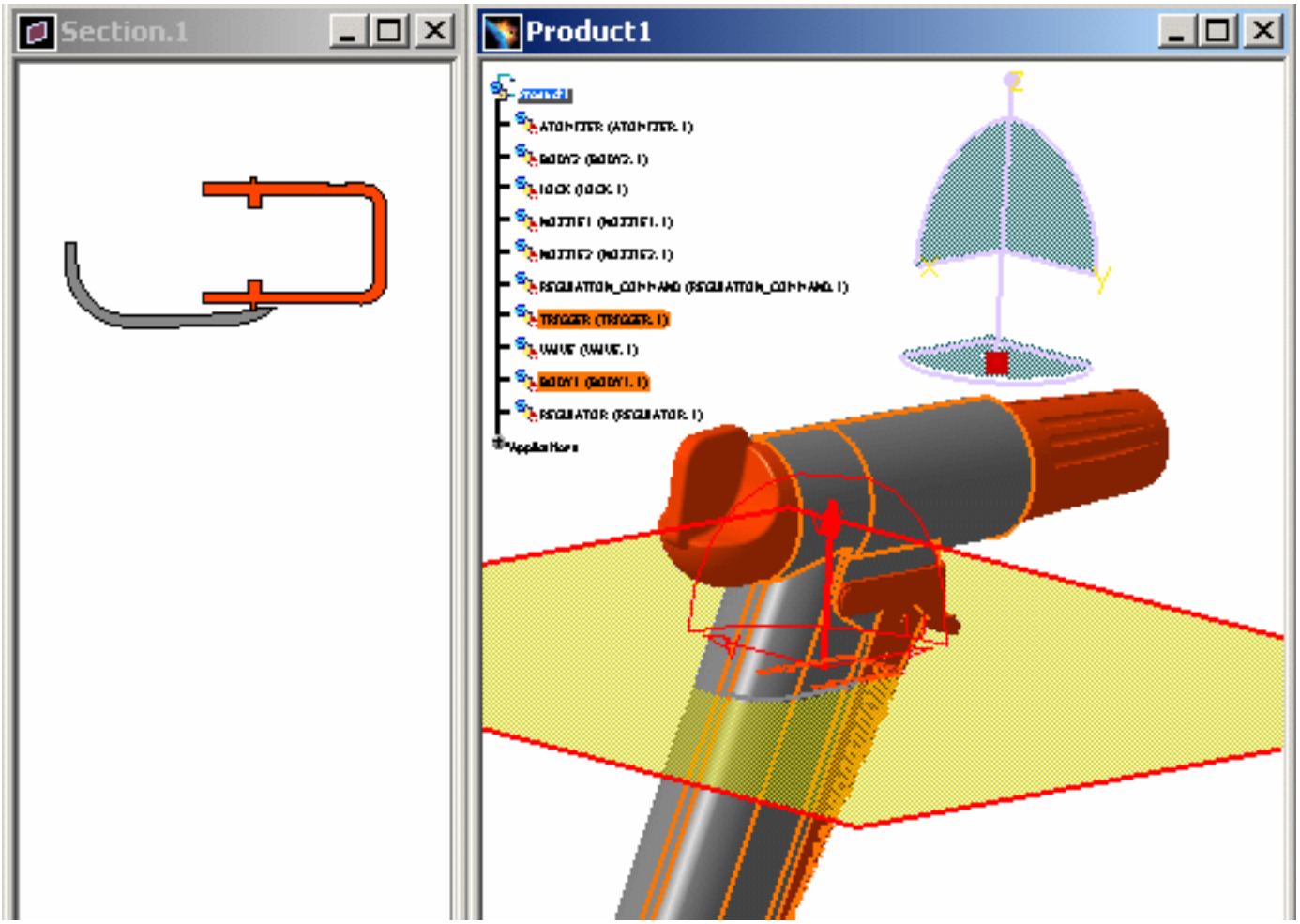

6. Double-click the normal vector of the plane (W-axis) or click the Invert Normal icon to invert it.

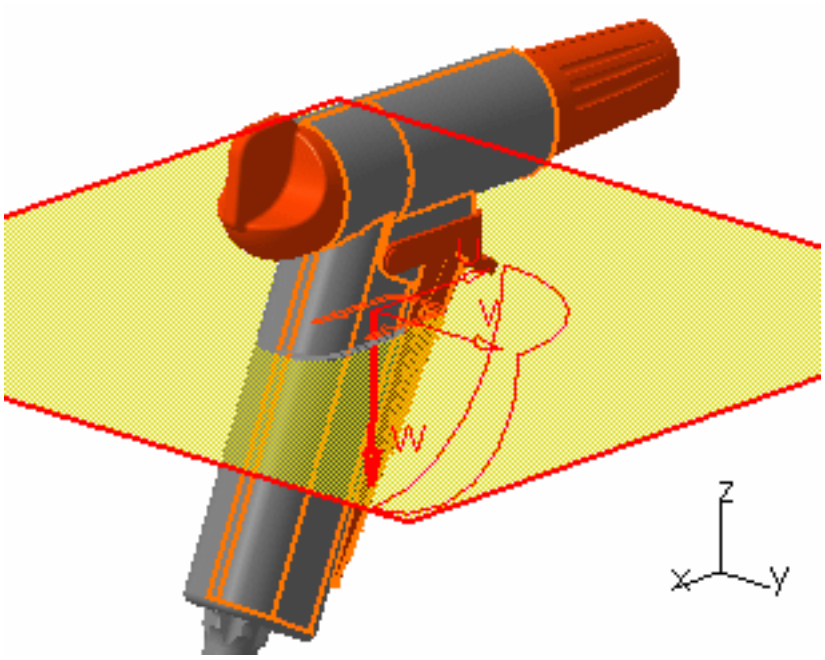

7. Click **OK** when done.

The section plane definition and results are kept as a specification tree feature.

By default, the plane is hidden when exiting the command. Use the **Tools->Options, Digital Mockup-> DMU Space Analysis** command (DMU Sectioning tab) to change this setting.

To show and edit the plane again, double-click the specification tree feature or select Hide/Show the plane representation in the contextual menu.

Creating 3D Section Cuts

3D section cuts cut away the material from the plane, beyond the slice or outside the box to expose the cavity within the product.

This task explains how to create 3D section cuts.

Insert the following cgr files: ATOMIZER.cgr, BODY1.cgr, BODY2.cgr, LOCK.cgr, NOZZLE1.cgr, NOZZLE2.cgr, REGULATION_COMMAND.cgr, REGULATOR.cgr, TRIGGER.cgr and VALVE.cgr.

They are to be found in the online documentation filetree in the common functionalities sample folder **cfysm/samples**.

1. Select **Insert -> Sectioning** from the menu bar, or click the Sectioning icon in the DMU Space Analysis toolbar and create a section plane.

   The Sectioning Definition dialog box appears.

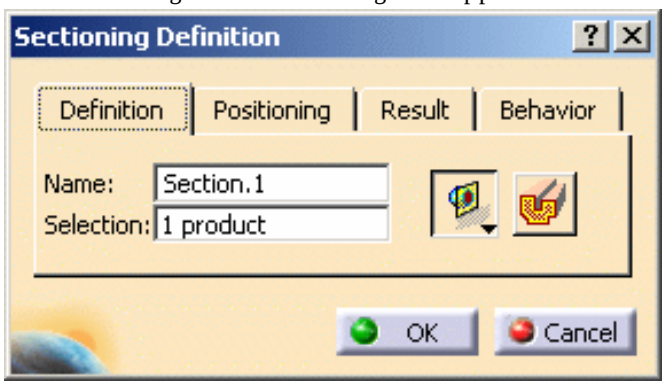

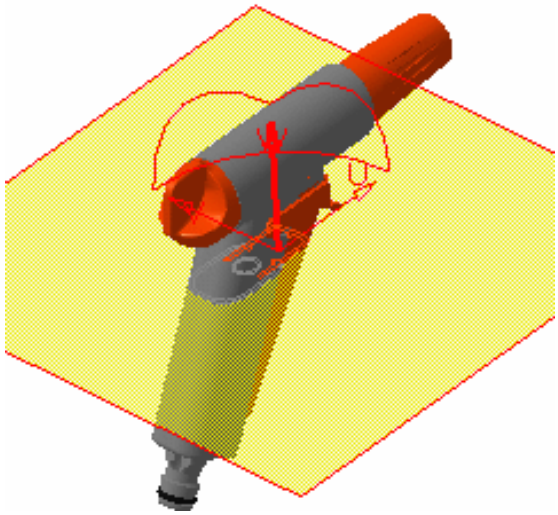

2. In the Definition tab, click the Volume Cut icon to obtain a section cut:

   The material in the negative direction along the normal vector of the plane (W-axis) is cut away exposing the cavity within the product.

   Note: In some cases, the normal vector of the plane is inverted to give you the best view of the cut.

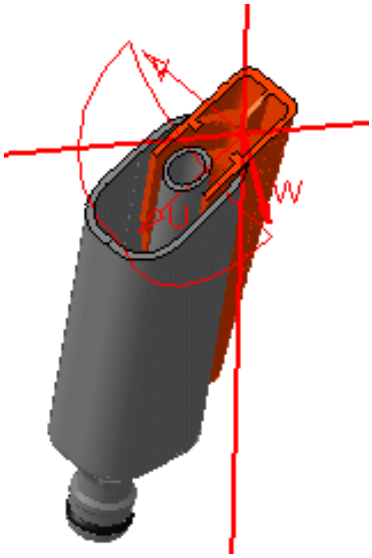

Double-click the normal vector of the plane to invert it, or click the Invert Normal icon in the Positioning tab of the Sectioning Definition dialog box.

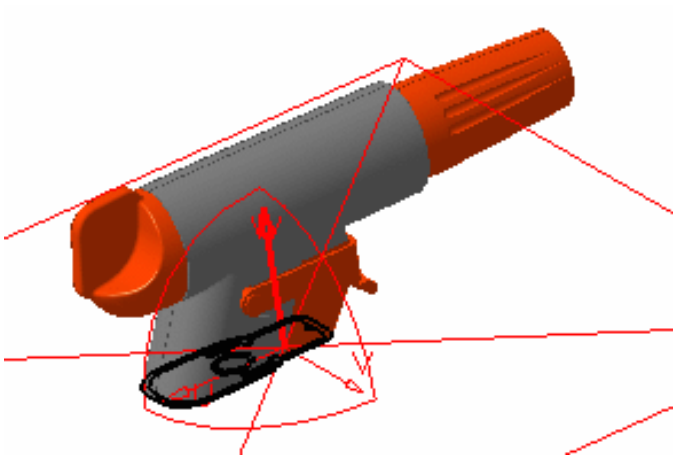

3. Re-click the icon to restore the material cut away.
4. Click **OK** when done.

3D Section Cut Display

The 3D section cut display is different when the sectioning tool is a plane. To obtain the same display as for slices and boxes (see illustrations below) and make measures on the generated wireframe cut:

- Select the **Allow measures on a section created with a simple plane** option in the **DMU Sectioning** tab (**Tools -> Options, Digitial Mockup -> DMU Space Analysis**)
- Then, create your section cut based on a plane.

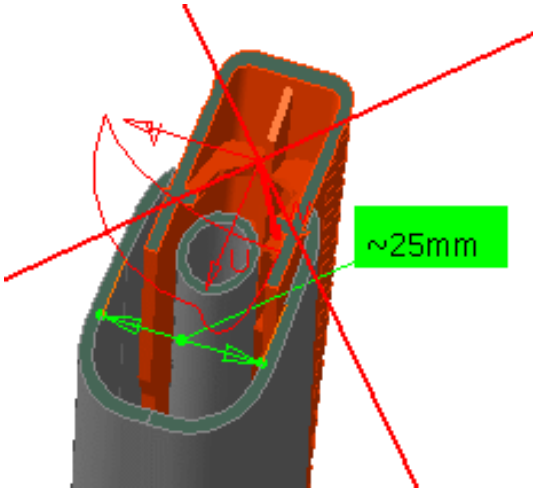

When the Sectioning Tool is a Slice:

When the Sectioning Tool is a Box:

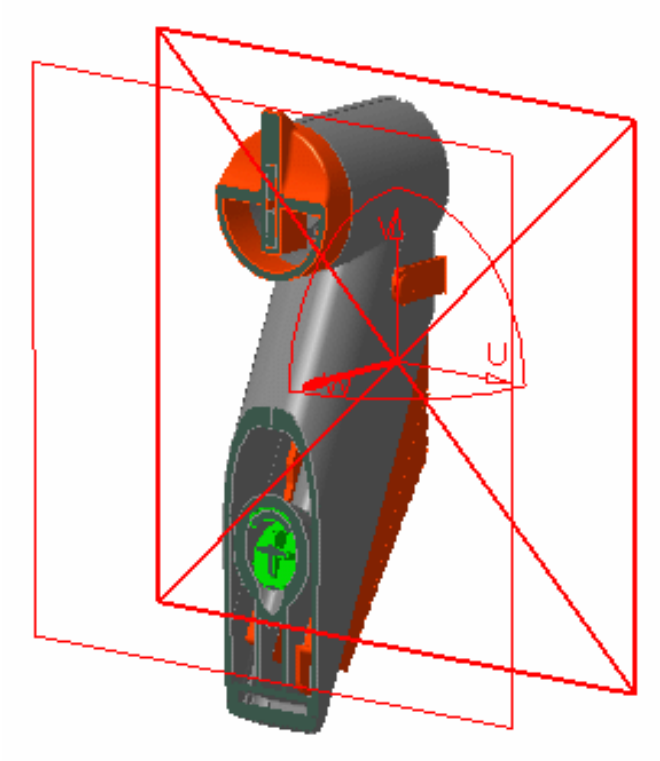

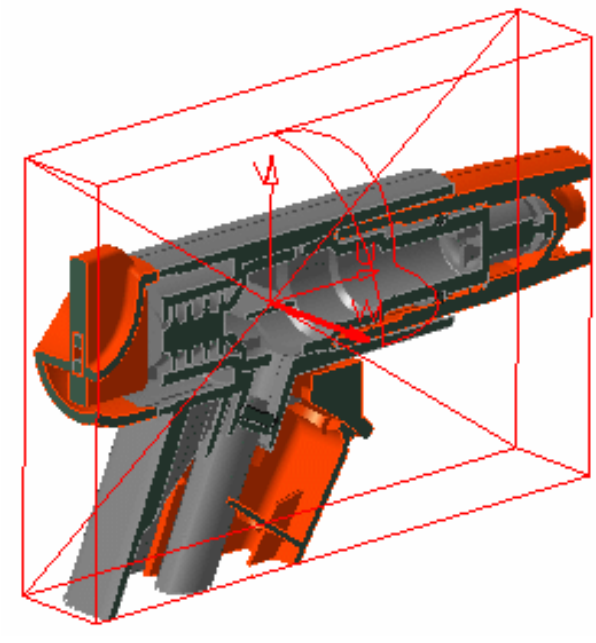

P2 Functionality

In DMU-P2, you can turn up to six independent section planes into clipping planes using the Volume Cut command to focus on the part of the product that interests you most.

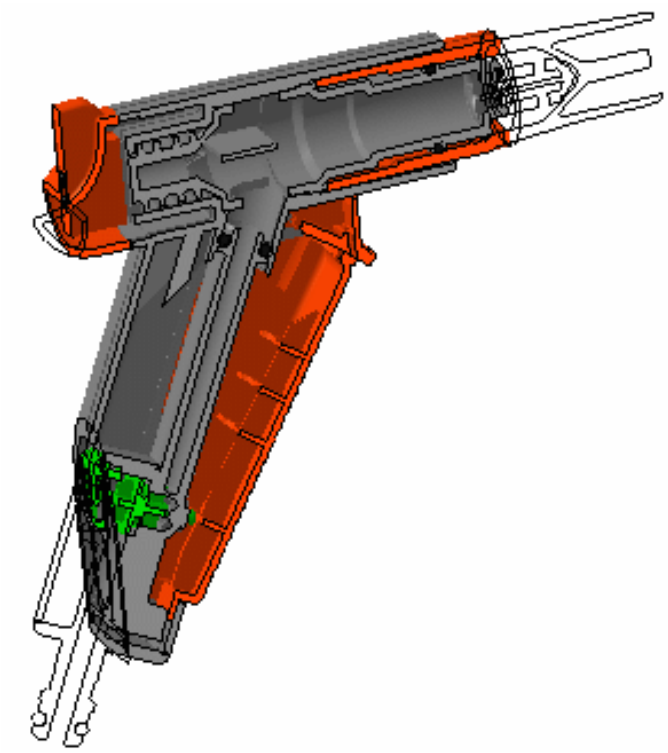

DMU Review

Section cuts created during DMU Reviews are not persistent and are only valid for the duration of the review. If you exit the DMU Review, the section cut is lost.

Manipulating Planes Directly

You can re-dimension, move and rotate section planes, or the master plane in the case of section slices and boxes, directly. As you move the cursor over the plane, the plane edge or the local axis system, its appearance changes and arrows appear to help you.

Re-dimensioning:

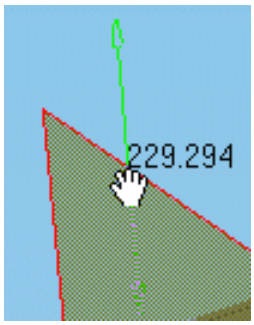

Moving along the normal vector of the plane:

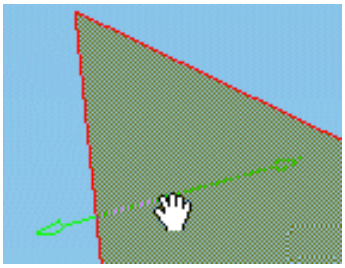

Rotating:

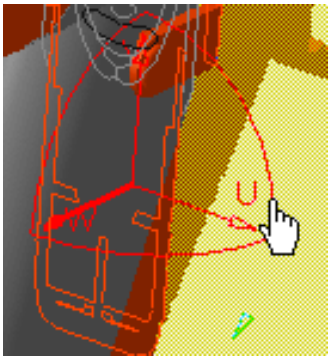

Moving in the x,y plane of the local axis system:

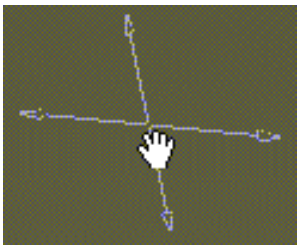

Sectioning results are updated in the Section viewer as you manipulate the plane.

To change this setting and have results updated when you release the mouse button only, de-activate the appropriate setting in the DMU Sectioning tab (**Tools ->Options..., Digital Mockup ->DMU Space Analysis**).

This task illustrates how to manipulate section planes directly.

Insert the following cgr files: ATOMIZER.cgr, BODY1.cgr, BODY2.cgr, LOCK.cgr, NOZZLE1.cgr, NOZZLE2.cgr, REGULATION_COMMAND.cgr, REGULATOR.cgr, TRIGGER.cgr and VALVE.cgr.

They are to be found in the online documentation filetree in the common functionalities sample folder **cfysm/samples**.

1. Select **Insert -> Sectioning** from the menu bar, or click the Sectioning icon in the DMU Space Analysis toolbar and create a section plane.

   A Section viewer showing the generated section is automatically tiled vertically alongside the document window.

   The generated section is automatically updated to reflect any changes made to the section plane.

   You can re-dimension the section plane:
2. Click and drag plane edges to re-dimension plane:

   Note: A dynamic plane dimension is indicated as you drag the plane edge.

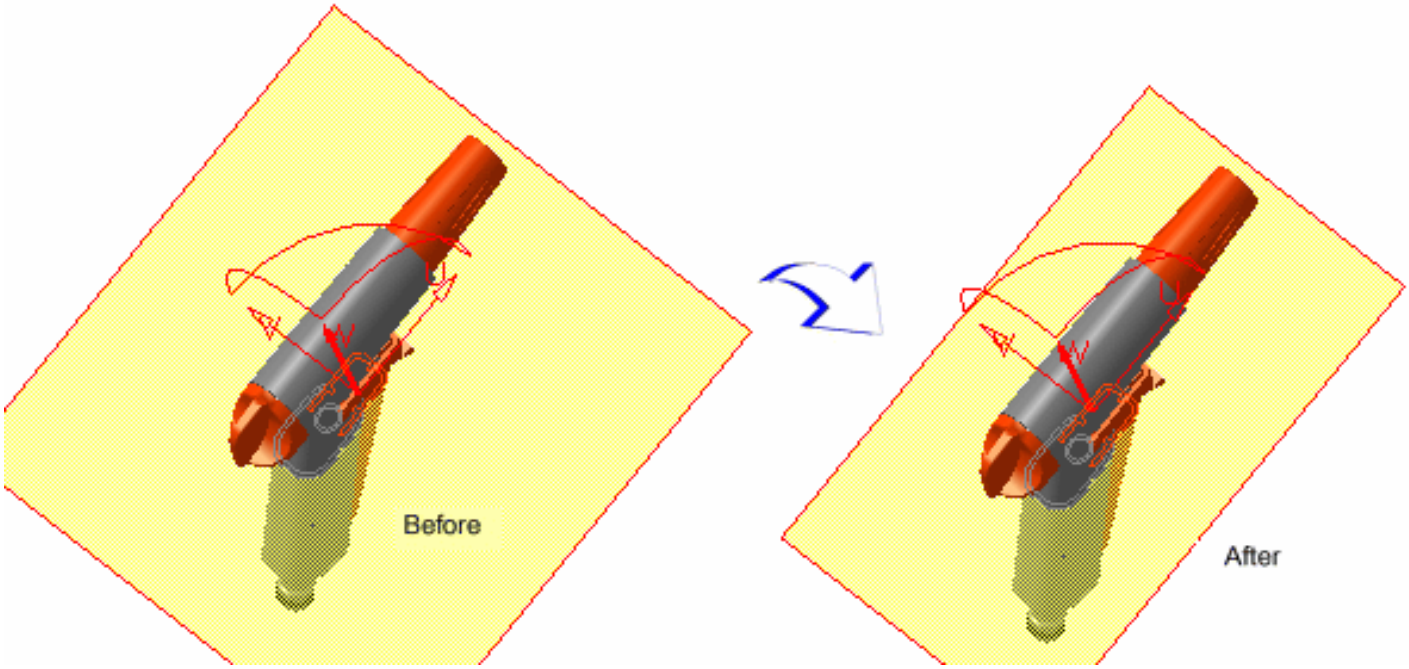

You can view and edit plane dimensions in the Edit Position and Dimensions command. The plane height corresponds to its dimension along the local U-axis and the width to its dimension along the local V-axis.

You can move the section plane along the normal vector of the plane:

3. Move the cursor over the plane, click and drag to move the plane to the desired location.

You can move the section plane in the U,V plane of the local axis system:

4. Press and hold down the left mouse button, then the middle mouse button and drag (still holding both buttons down) to move the plane to the desired location.

You can rotate the section plane around its axes:

5. Move the cursor over the desired plane axis system axis, click and drag to rotate the plane around the selected axis.

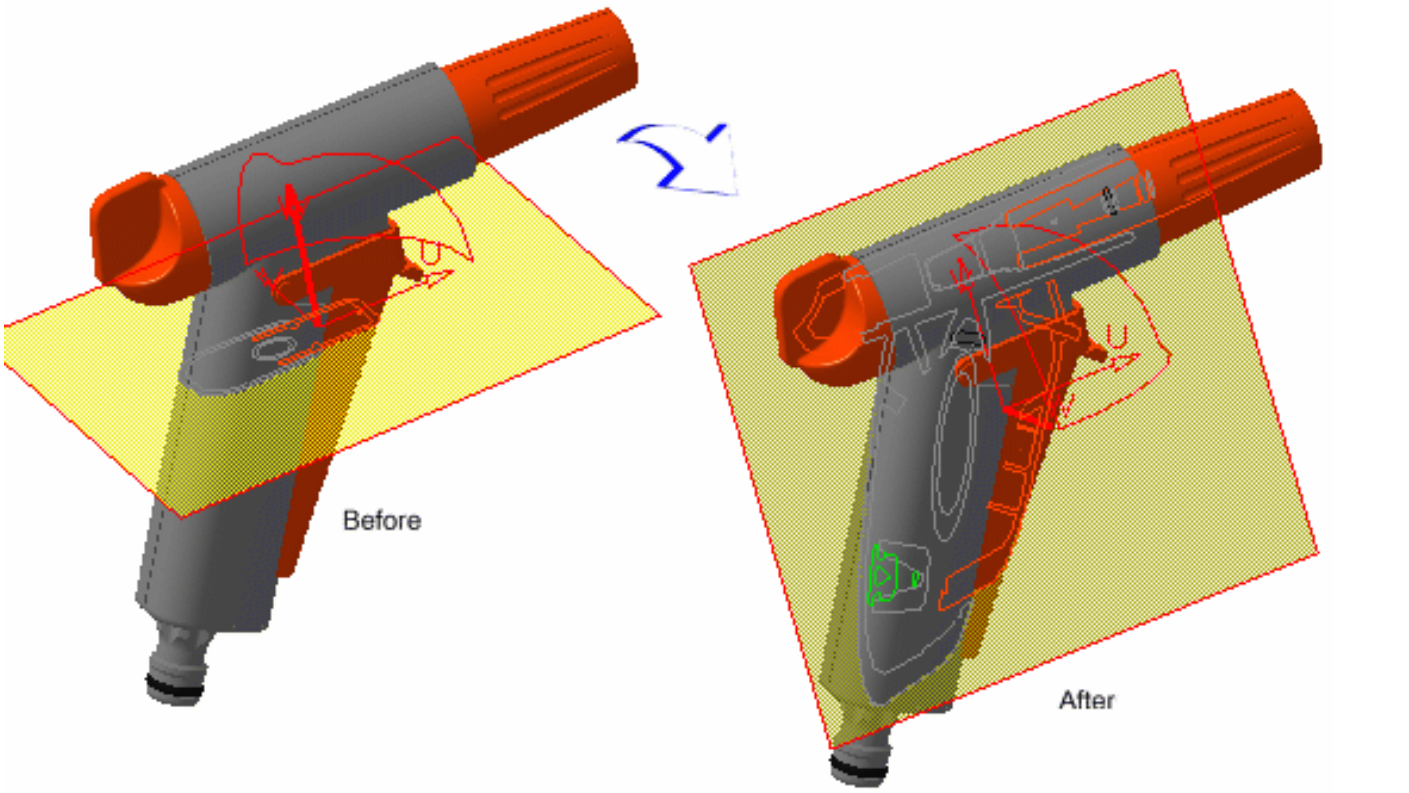

6. (Optional) Click the Reset Position icon in the Positioning tab of the Sectioning Definition dialog box to restore the center of the plane to its original position.

7. Click **OK** in the Sectioning Definition dialog box when done.

Positioning Planes On a Geometric Target

You can position section planes, section slices and section boxes with respect to a geometrical target (a face, edge, reference plane or cylinder axis). In the case of section slices and boxes, it is the master plane that controls how the slice or box will be positioned.

This task illustrates how to position a section plane with respect to a geometrical target.

Insert the following cgr files: ATOMIZER.cgr, BODY1.cgr, BODY2.cgr, LOCK.cgr, NOZZLE1.cgr, NOZZLE2.cgr, REGULATION_COMMAND.cgr, REGULATOR.cgr, TRIGGER.cgr and VALVE.cgr.

They are to be found in the online documentation filetree in the common functionalities sample folder **cfysm/samples**.

1. Select **Insert -> Sectioning** from the menu bar, or click the Sectioning icon in the DMU Space Analysis toolbar and create a section plane.

   The Sectioning Definition dialog box appears.

   A Section viewer showing the generated section is automatically tiled vertically alongside the document window.

   The generated section is automatically updated to reflect any changes made to the section plane.

2. Click the Positioning tab in the Sectioning Definition dialog box.

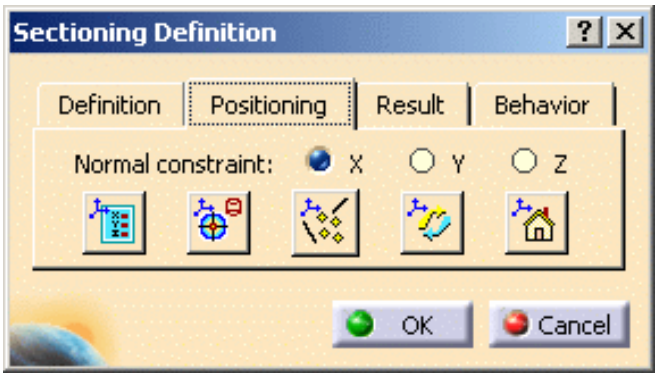

3. Click the Geometrical Target icon to position the plane with respect to a geometrical target.

4. Point to the target of interest:

   A rectangle and vector representing the plane and the normal vector of the plane appear in the geometry area to assist you position the section plane. It moves as you move the cursor.

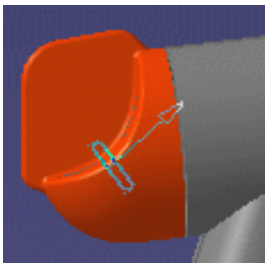

5. When satisfied, click to position the section plane on the target.

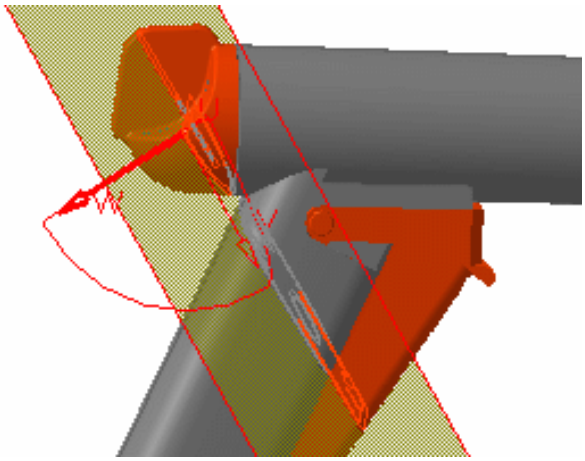

Notes:

- To position planes orthogonal to edges, simply click the desired edge.

- A smart mode recognizes cylinders and snaps the plane directly to the cylinder axis. This lets you, for example, make a section cut normal to a hole centerline. To de-activate this mode, use the Ctrl key.

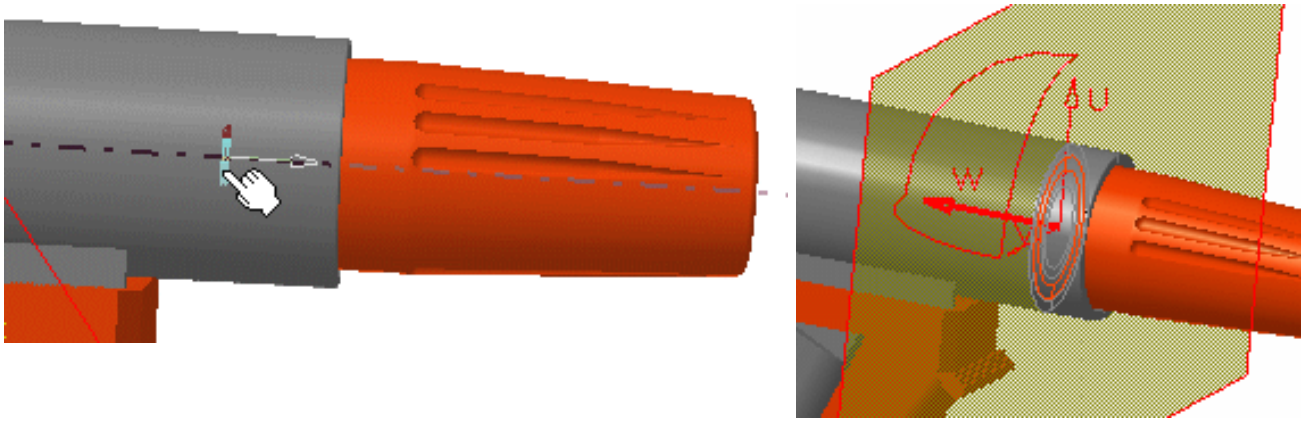

- Selecting the Automatically reframe option in the DMU Sectioning tab (**Tools -> Options -> Digital Mockup -> DMU Space Analysis**), reframes the Section viewer and locates the point at the center of the target at the center of the Section viewer.

  Zooming in lets youpinpointthe selected point.
  This is particularly useful when using snap capabilities in a complex DMU session containing a large number of objects.

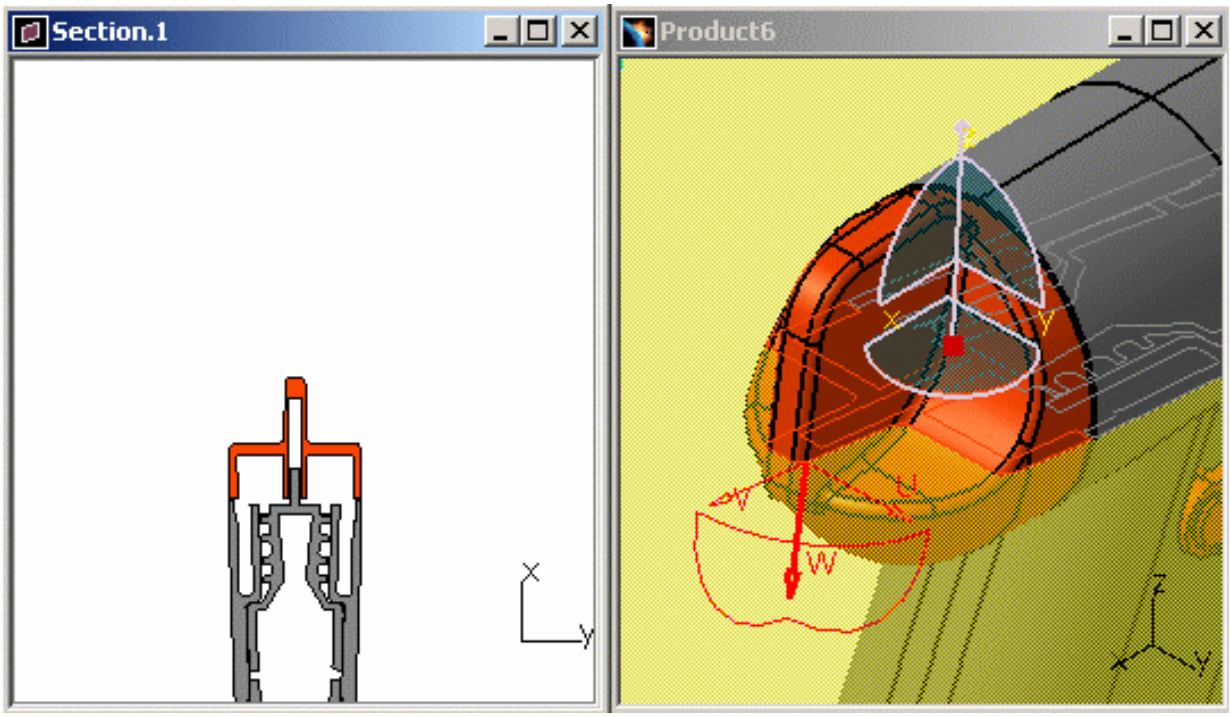

P2 Functionality

In DMU-P2, you can move the plane along a curve, edge or surface:

- Point to the target of interest
- Press and hold down the Ctrl key
- Still holding down the Ctrl key, move the cursor along the target. The plane is positioned tangent to the small target plane. As you move the cursor, the plane moves along the curve or edge.

6. (Optional) Click the Reset Position icon to restore the center of the plane to its original position.
7. Click OK in the Sectioning Definition dialog box when done.

Positioning Planes Using the Edit Position and Dimensions Command

In addition to manipulating the plane directly in the geometry area, you can position the section plane more precisely using the Edit Position and Dimensions command. You can move the plane to a new location as well as rotate the plane. You can also re-dimension the section plane.

In the case of section slices and boxes, it is the master plane that controls how the slice or box will be positioned.

This task illustrates how to position and re-dimension the section plane using the Edit Position and Dimensions command.

Insert the following cgr files: ATOMIZER.cgr, BODY1.cgr, BODY2.cgr, LOCK.cgr, NOZZLE1.cgr, NOZZLE2.cgr, REGULATION_COMMAND.cgr, REGULATOR.cgr, TRIGGER.cgr and VALVE.cgr.

They are to be found in the online documentation filetree in the common functionalities sample folder **cfysm/samples**.

1. Select **Insert -> Sectioning** from the menu bar, or click the Sectioning icon in the DMU Space Analysis toolbar and create a section plane.

   A Section viewer showing the generated section is automatically tiled vertically alongside the document window. The generated section is automatically updated to reflect any changes made to the section plane.

   The Sectioning Definition dialog box is also displayed.

2. Click the Positioning tab in the Sectioning Definition dialog box.

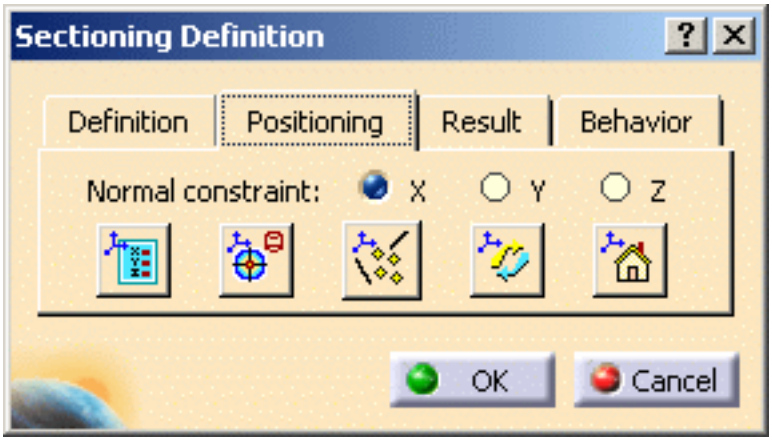

3. Click the Edit Position and Dimensions icon to enter parameters defining the position of the plane:

   The Edit Position and Dimensions dialog box appears.

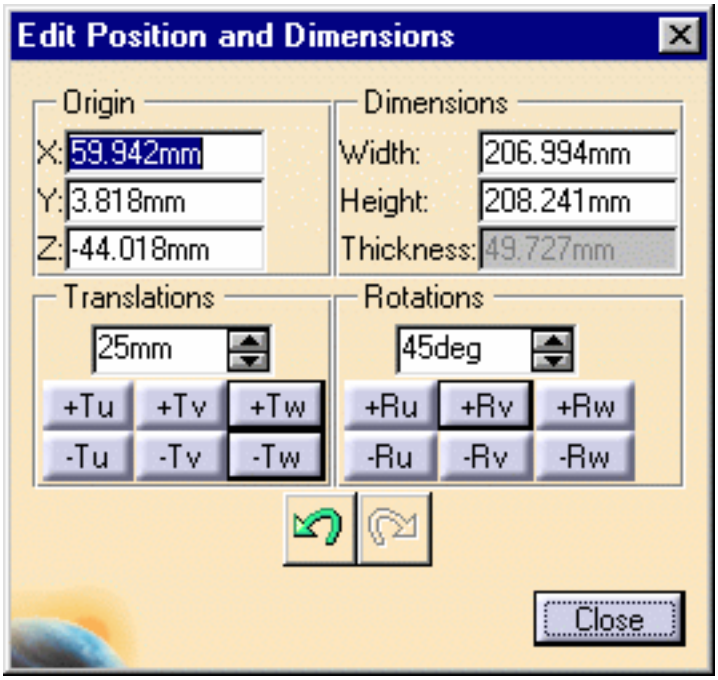

4. Enter values in Origin X, Y or Z boxes to position the center of the plane with respect to the absolute system coordinates entered.

   By default, the center of the plane coincides with the center of the bounding sphere around the products in the current selection.

   Using the **Tools -> Options...** command (DMU Sectioning tab under **Digital Mockup ->DMU Space Analysis**), you can customize settings for both the normal vector and the origin of the plane.

   You can move the section plane to a new location. Translations are made with respect to the local plane axis system.

5. Enter the translation step directly in the Translation spin box or use spin box arrows to scroll to a new value, then click -Tu, +Tu, -Tv, +Tv, -Tw, +Tw, to move the plane along the selected axis by the defined step.

   Note: Units are current units set using **Tools-> Options** (Units tab under **General-> Parameters and Measure**).

   Change the translation step to 25mm and click +Tw for example. The plane is translated 25 mm in the positive direction along the local W-axis.

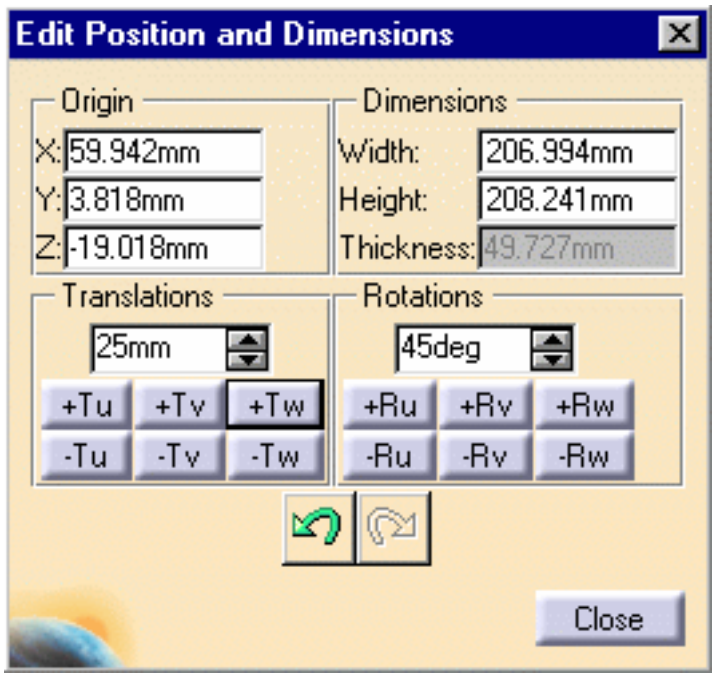

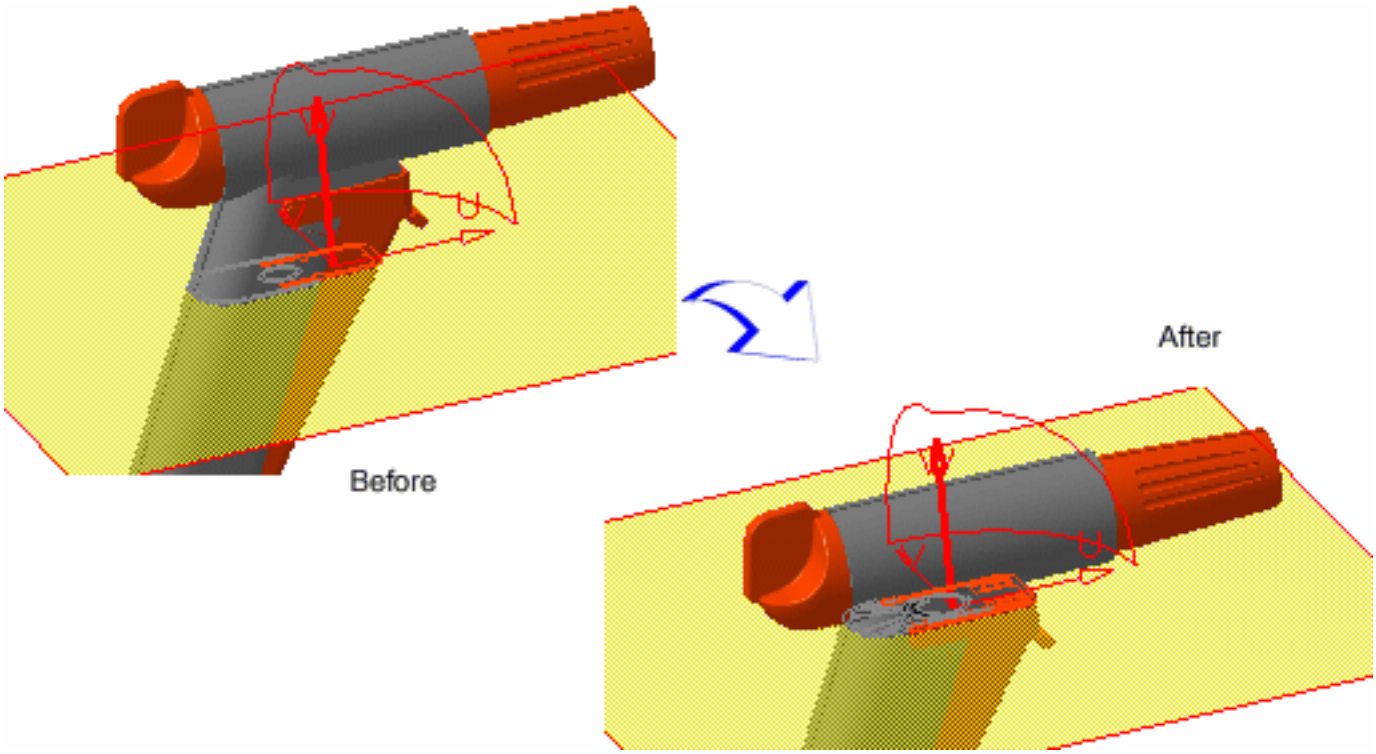

You can rotate the section plane. Rotations are made with respect to the local plane axis system.

6. Enter the rotation step directly in the Rotation spin box or use spin box arrows to scroll to a new value, then click -Ru, +Ru, -Rv, +Rv, -Rw, +Rw, to rotate the plane around the selected axis by the defined step.

Note: Units are current units set using **Tools -> Options**.

With a rotation step of 45 degrees, click +Rv for example to rotate the plane by the specified amount in the positive direction around the local V-axis.

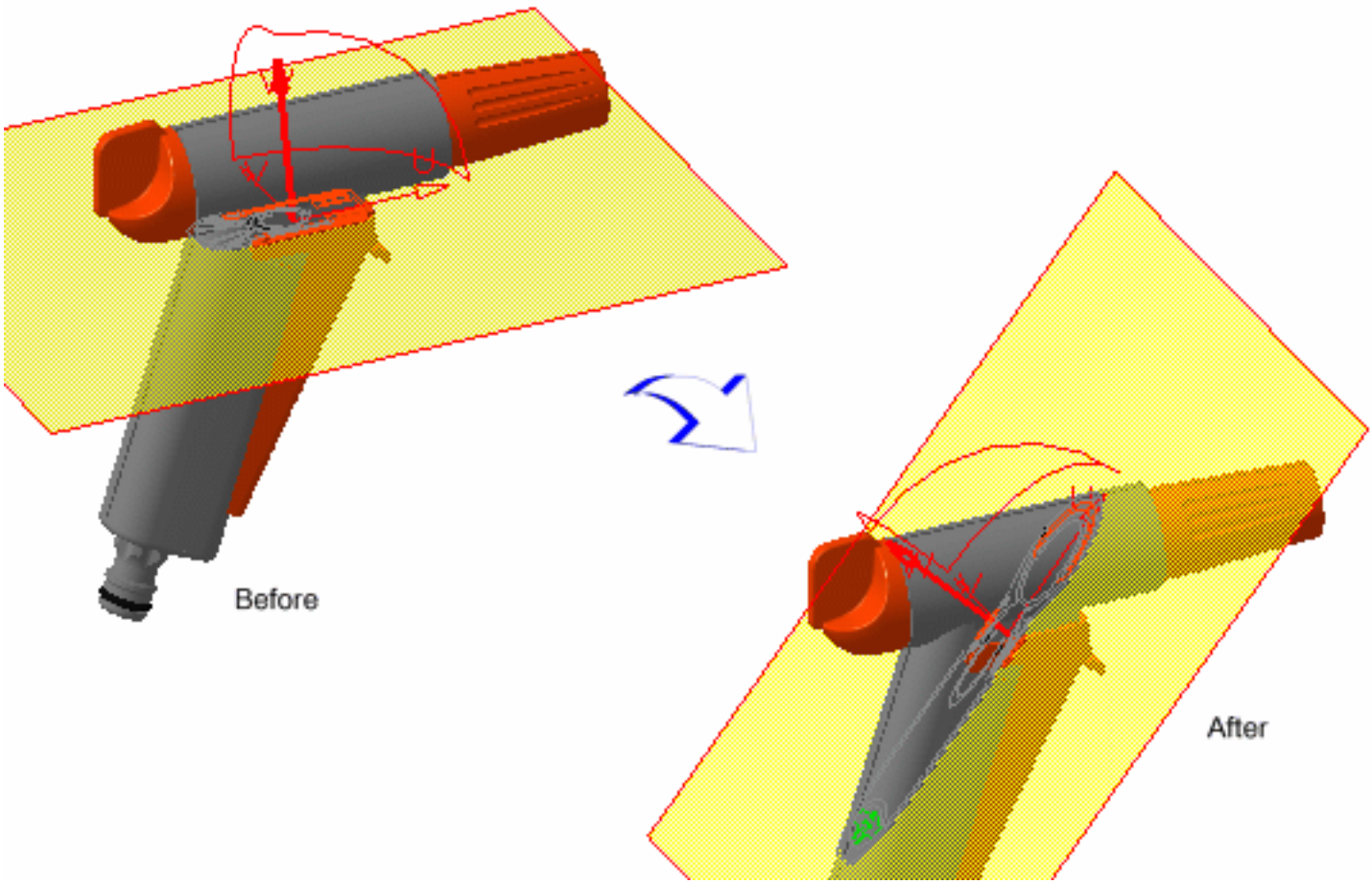

You can edit plane dimensions. The plane height corresponds to its dimension along the local U-axis and the width to its dimension along the local V-axis. You can also edit slice or box thickness.

7. Enter new width, height and/or thickness values in the Dimensions box to re-dimension the plane.

The plane is re-sized accordingly.

- Use Undo and Redo icons in the Edit Position and Dimensions dialog box to cancel the last action or recover the last action undone respectively.
- Use the Reset Position icon in the Positioning tab of the Sectioning Definition dialog box to restore the section plane to its original position.
- You can also view and edit plane dimensions in the Properties dialog box (**Edit -> Properties** or via the contextual menu).
  This command is not available when using the sectioning command.

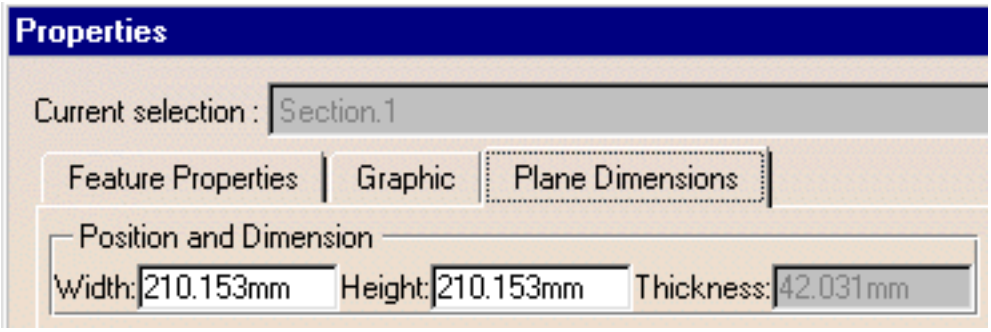

8. Click Close in the Edit Position and Dimensions dialog box when satisfied.

9. Click OK in the Sectioning Definition dialog box when done.

More About the Section Viewer

This task illustrates how to make the most of section viewer capabilities.

Orienting the section
Working with the 2D grid
Working with a 3D view
Detecting collisions

Most of the commands described in this task are to be found in the Result tab of the Sectioning Definition dialog box or in the Section viewer contextual menu.

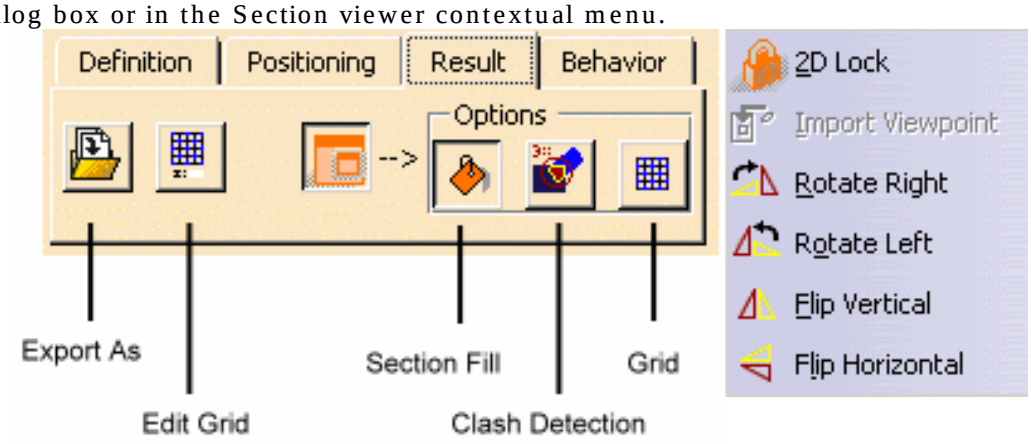

Insert the following cgr files: ATOMIZER.cgr, BODY1.cgr, BODY2.cgr, LOCK.cgr, NOZZLE1.cgr, NOZZLE2.cgr, REGULATION_COMMAND.cgr, REGULATOR.cgr, TRIGGER.cgr and VALVE.cgr.

They are to be found in the online documentation filetree in the common functionalities sample folder **cfysm/samples**.

1. Select **Insert -> Sectioning** from the menu bar, or click the Sectioning icon in the DMU Space Analysis toolbar and create the desired section plane, slice or box and corresponding section.
   The Section viewer is automatically tiled vertically alongside the document window. It displays a front view of the section, and is by default, locked in a 2D view. Points representing the intersection of the section plane with any wireframe elements are also visible in the Section viewer.

   Notice that the section view is a filled view. This is the default option. The fill capability generates surfaces for display and measurement purposes (area, center of gravity, etc.). To obtain a correct filled view, the section plane must completely envelop the product.

   To obtain an unfilled view, de-activate the Section Fill icon in the Result tab of the Sectioning Definition dialog box.

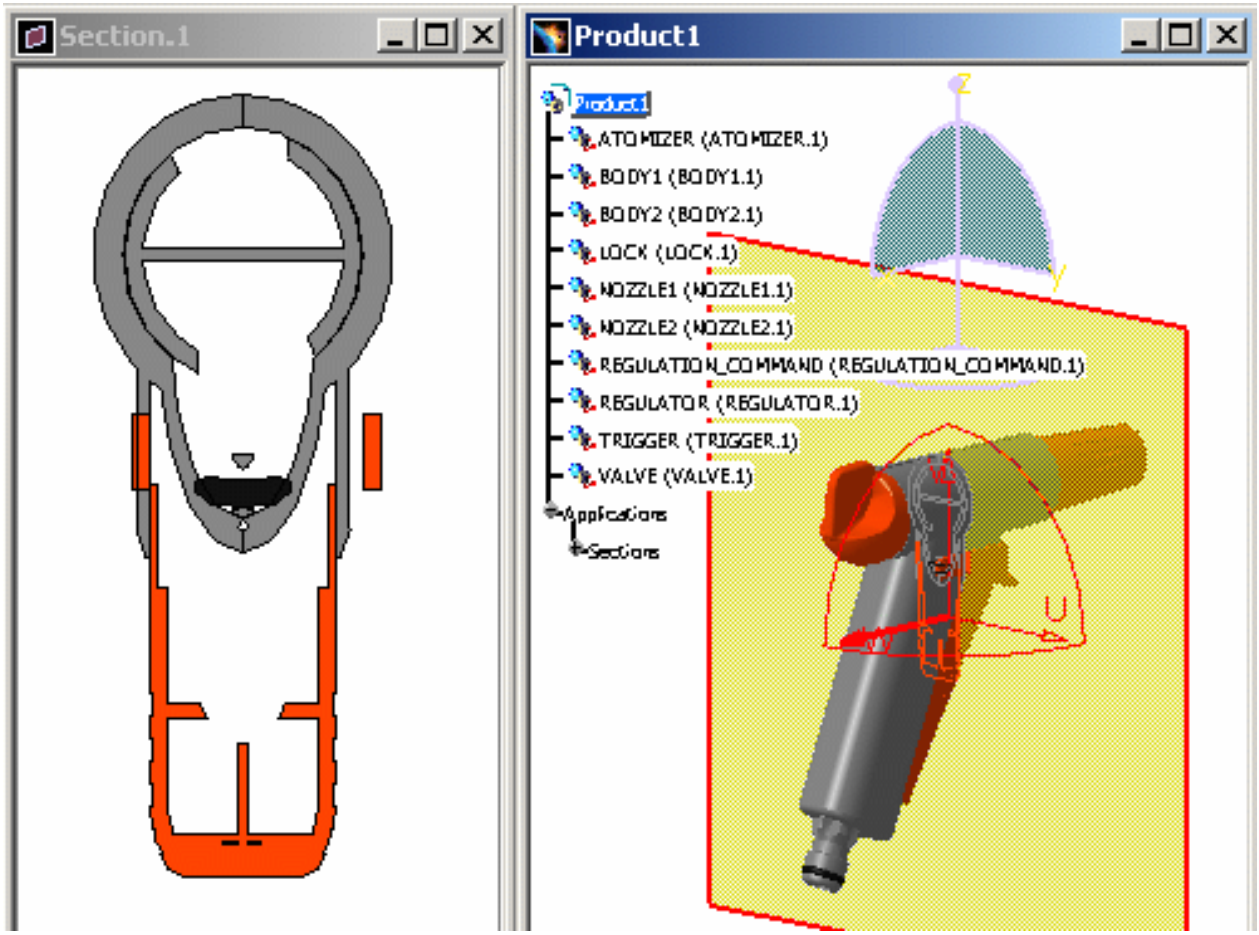

- In the Section viewer, the appearance of the cursor changes to attract your attention to the existence of the contextual menu.
- You can change the default settings for this window using **Tools ->Options...** command (DMU Sectioning tab under **Digital Mockup ->DMU Space Analysis**).

Orienting the Section

2. Orient the generated section.

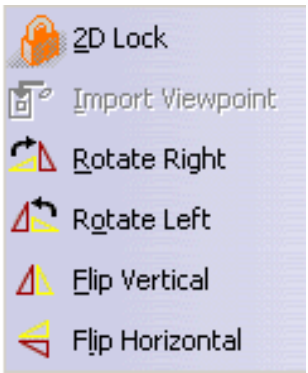

Flip and Rotate commands are to be found in the contextual menu. Right-click in the Section viewer and:

- Select Flip Vertical or Flip Horizontal to flip the section vertically or horizontally 180 degrees.
- Select Rotate Right or Rotate Left to rotate the section right or left 90 degrees.

Orienting the section using Flip and Rotate commands is not persistent. If you exit the section viewer, any flip and rotate settings are lost.

Working with the 2D Grid

3. Click the Result tab in the Sectioning Definition dialog box, then select the Grid icon under Options to display a 2D grid.

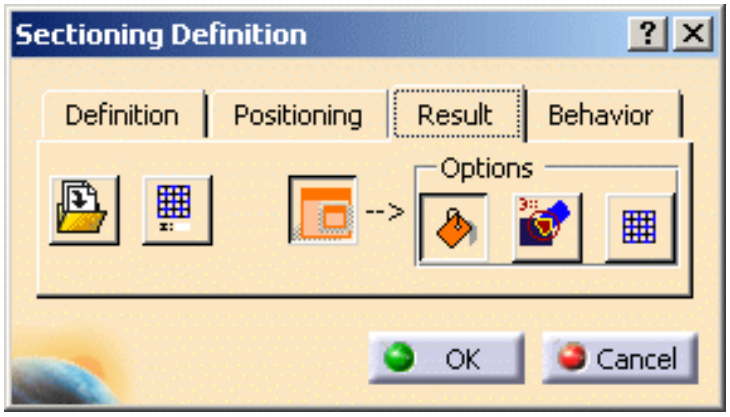

By default, grid dimensions are those of the generated section. Moving the section plane re-sizes the grid to results.

To size the grid to the section plane, clear the Automatic grid re-sizing check box in the DMU Sectioning tab (**Tools -> Options..., Digital Mockup -> DMU Space Analysis**).
You can edit the grid step, style and mode using the Edit Grid command.

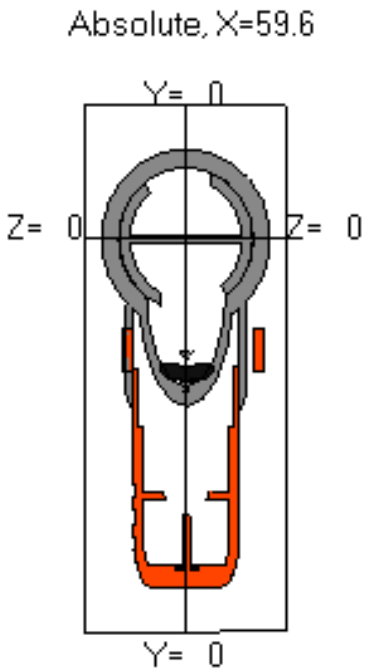

4. Select the Edit Grid icon to adjust grid parameters:

The Edit Grid dialog box appears:

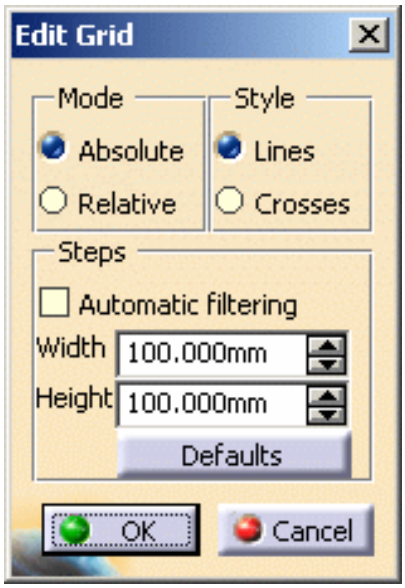

In the above example, the grid mode is absolute and the style is set to lines.

In the absolute mode, grid coordinates are set with respect to the absolute axis system of the document.

The grid step is set to the default value of 100. The arrows let you scroll through a discrete set of logarithmically calculated values. You can also enter a grid step manually.

Units are current units set using **Tools-> Options** (Units tab under **General-> Parameters and Measure**).

5. Scroll through grid width and height and set the grid step to 10 x 10.

6. Click the Relative mode option button:

   In the relative mode, the center of the grid is placed on the center of section plane.

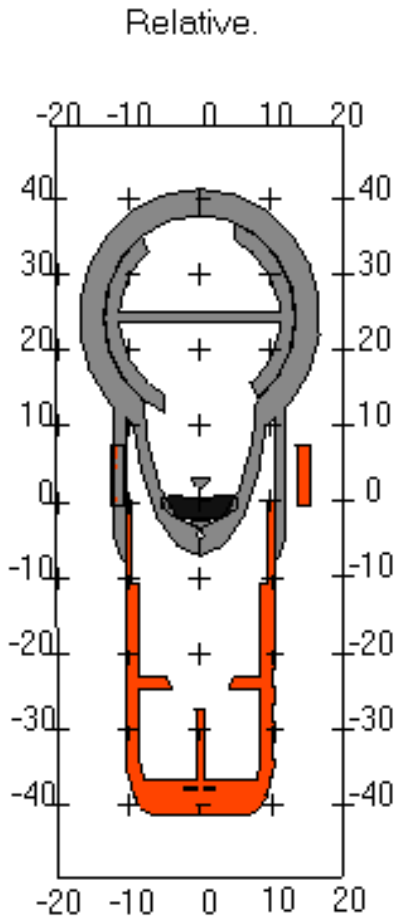

7. Click the Crosses style option button.

   Grid parameters are persistent: any changes to default parameters are kept and applied next time you open the viewer or re-edit the section.

8. Click the Automatic filtering checkbox to adjust the level of detail of grid display when you zoom in and out.
9. Right-click the grid then select Coordinates to display the coordinates at selected intersections of grid lines. The Clean All command removes displayed grid coordinates.

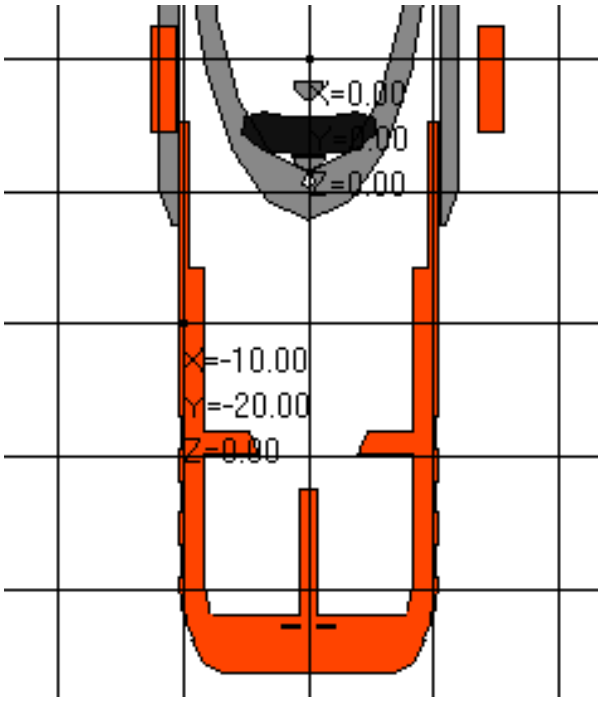

Note: You can customize both grid and Section viewer settings using the **Tools -> Options...** command (DMU Sectioning tab under **Digital Mockup ->DMU Space Analysis**).
Alternatively, select **Analyze ->Graphic Messages ->Coordinate** to display the coordinates of points, and/or **Name to** identify products as your cursor moves over them.

Clicking turns the temporary markers into 3D annotations.

10. Click **OK** in the Edit Grid dialog box when done.

Working with a 3D View

By default, the Section viewer is locked in a 2D view. De-activating the 2D view lets you:

- Work in a 3D view and gives you access to 3D viewing tools
- Set the same viewpoint in the Section viewer as in the document window.

Returning to a 2D view snaps the viewpoint to the nearest orthogonal view defined in the Section viewer.

11. Right-click in the Section viewer and select the 2D Lock command from the contextual menu.

The Import Viewpoint command becomes available.

12. Manipulate the section plane.

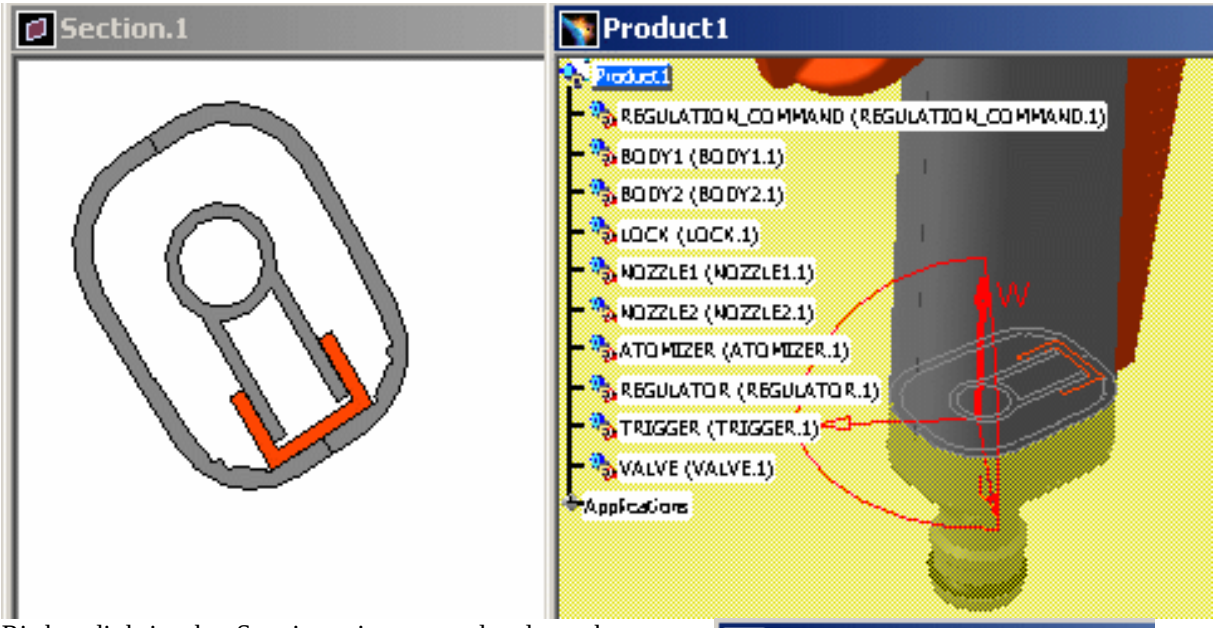

13. Right-click in the Section viewer and select the Import Viewpoint command from the contextual menu.

    The viewpoint in the Section viewer is set to that of the document window.

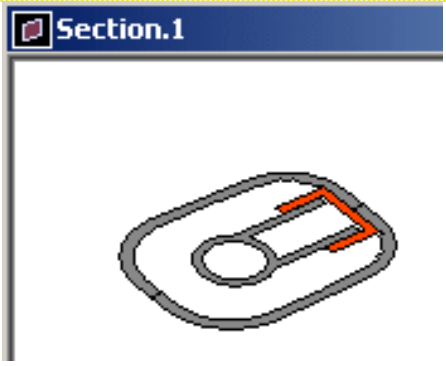

14. Continue manipulating the section plane.

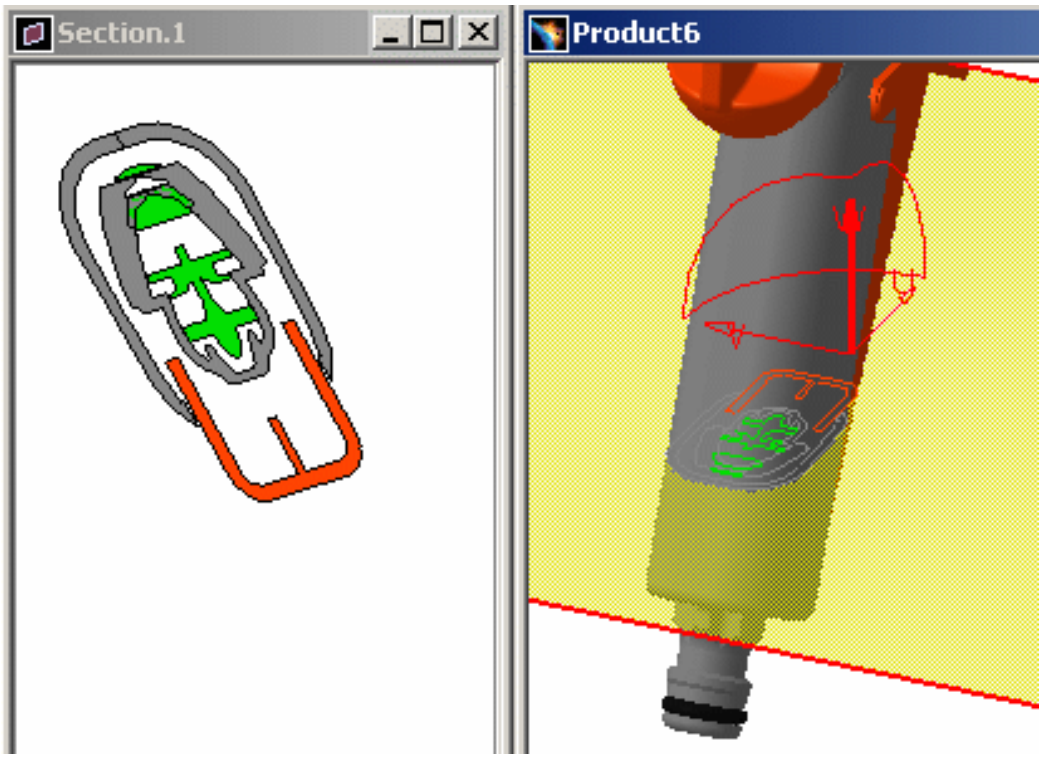

15. Return to a locked 2D view.

The viewpoint in the Section viewer snaps to the nearest orthogonal viewpoint in this viewer and not to the viewpoint defined by the local axis system of the plane in the document window.

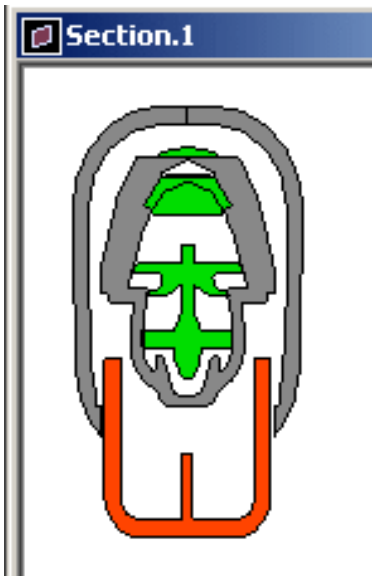

You can also save sectioning results in a variety of different formats using the **Export As** command in the Result tab of the Sectioning Definition dialog box or the **Capture** command (**Tools ->Image ->Capture**).

16. Click **OK** in the Sectioning Definition dialog box when done.

If you exit the Sectioning command with the Section viewer still active, this window is not closed and filled sections remain visible.

P2 Functionality - Detecting Collisions

In DMU-P2, You can detect collisions between 2D sections. To do so, click the Clash Detection icon in the Result tab of the Sectioning Definition dialog box.

Clashes detected are highlighted in the Section viewer.

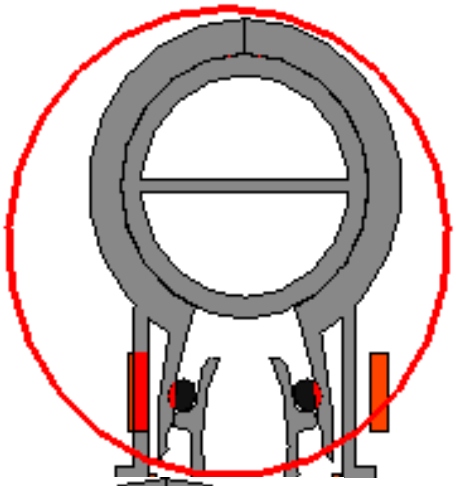

Collision detection is dynamic: move the section plane and watch the Section viewer display being updated.

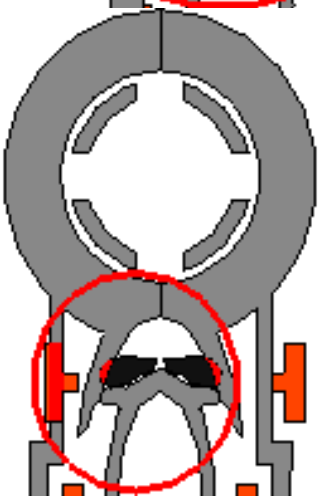

Measuring Minimum Distances

This task explains how to measure minimum distance between products.

Open the AnalyzingAssembly01.CATProduct document.

1. Click the **Distance and Band Analysis** icon to calculate distances.

   The Edit Distance and Band Analysis dialog box appears.

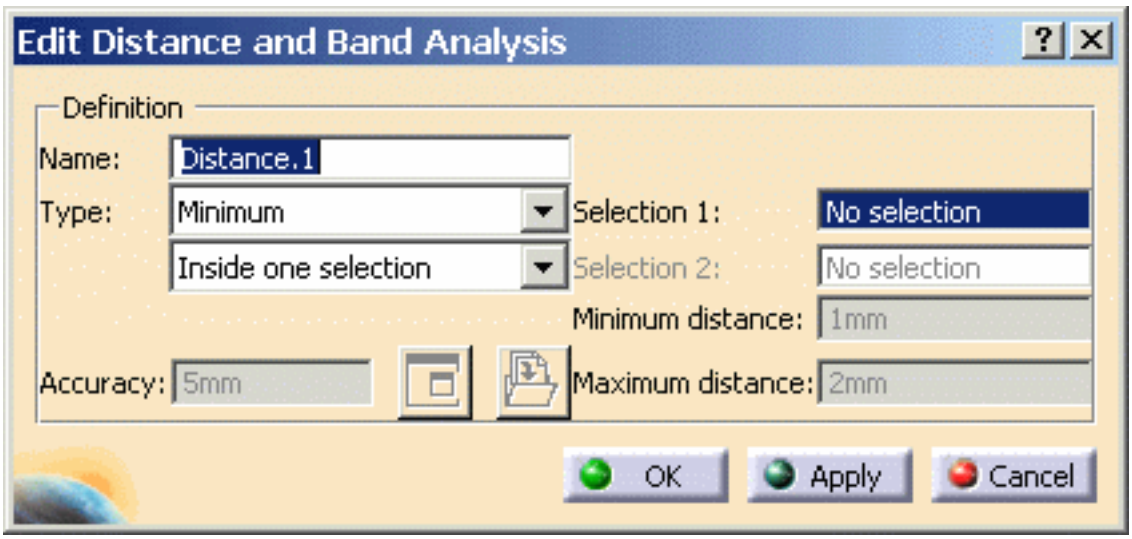

   Three computation types are available:

   inside one selection: (default type): within any one selection, tests each product of the selection against all other products in the same selection.
   Between two selections: tests each product in the first selection against all products in the second selection.
   Selection against all: tests each product in the defined selection against all other products in the document.

2. Select Between two selections.

3. Select CRIC_TOP (CRIC_TOP.1) to define Selection 1.

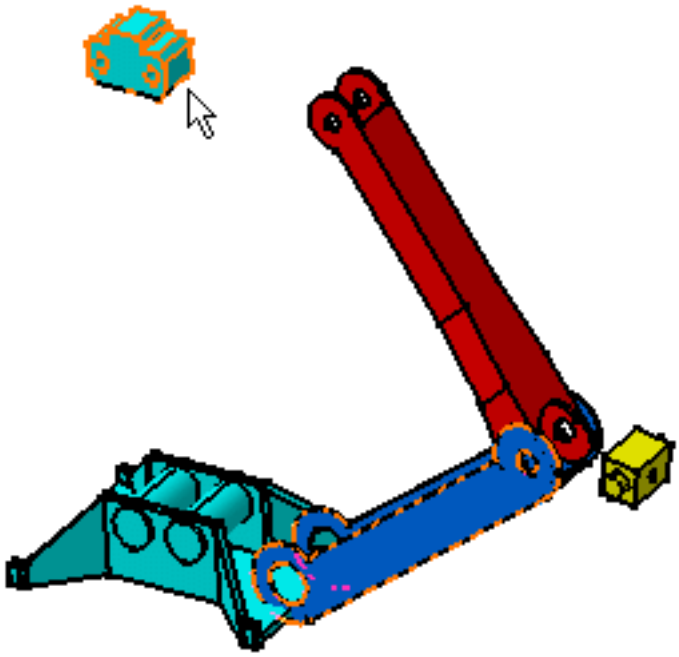

4. Click Selection 2 field and multi-select CRIC_BRANCH_3 (CRIC_BRANCH_3.1) and CRIC_JOIN (CRIC_JOIN.1)

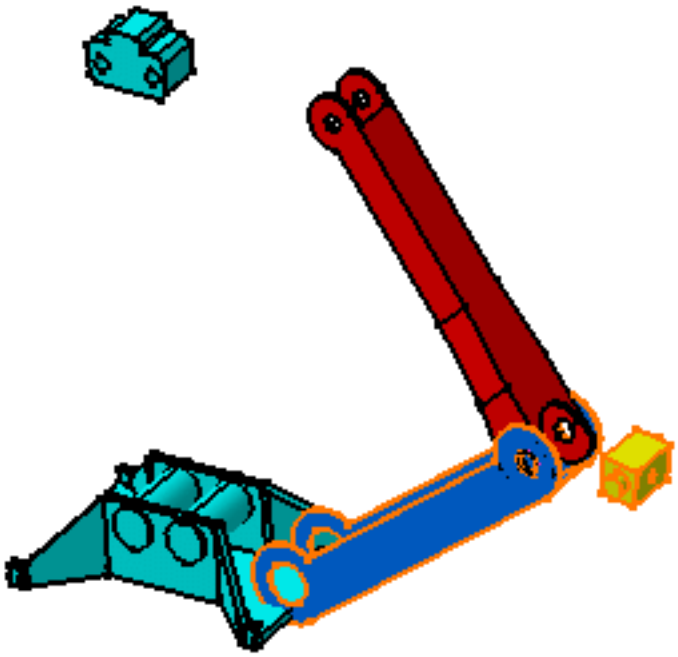

You can select as many products as you want. Products will be placed in the active selection. To de-select products, reselect them in the specification tree or the geometry area.

5. Click **Apply** to calculate the distance.

A Preview window appears visualizing selected products and the minimum distance (represented by a line, two arrows and a value). The Edit Distance dialog box expands to show the results.

If necessary, pan, zoom and/or rotate in the Preview window to visualize the results better.

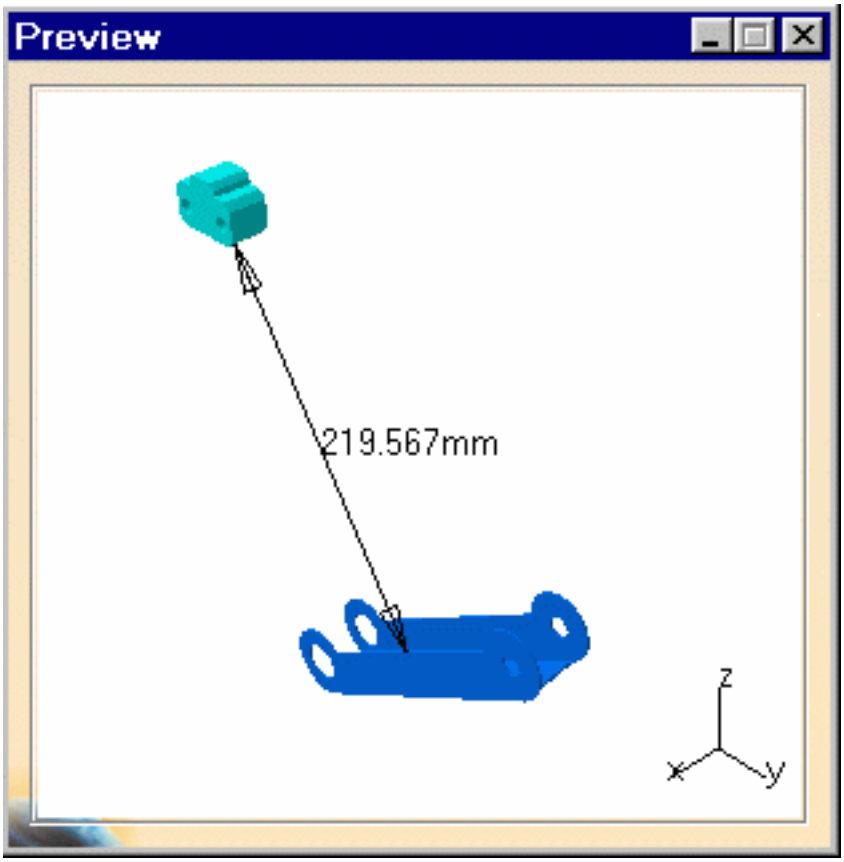

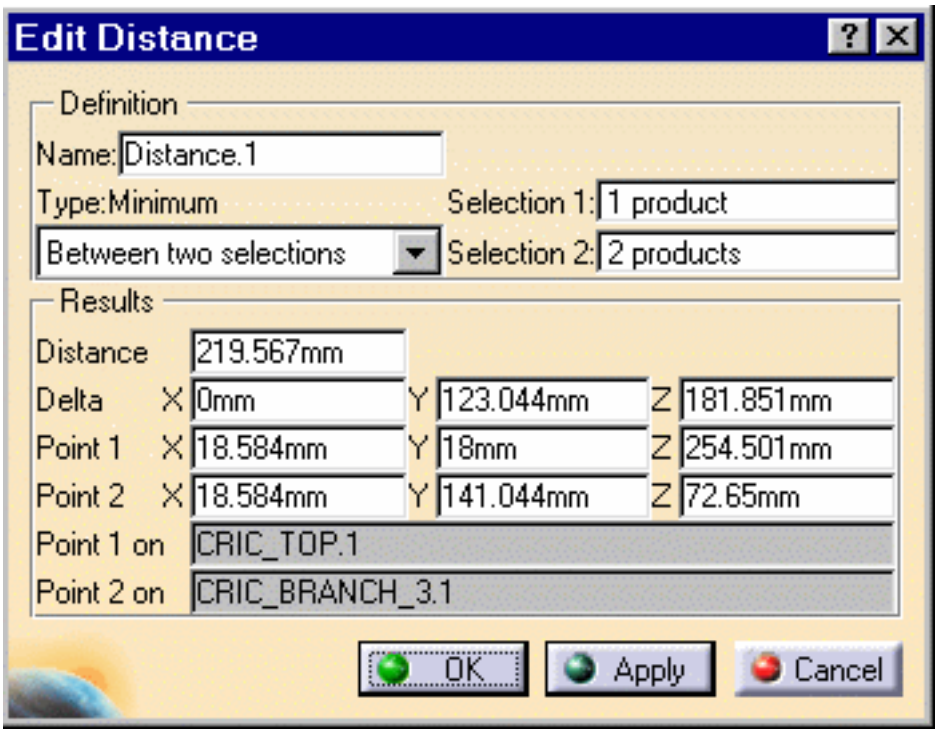

Minimum distance and other information identifying all distance components is given in the expanded dialog box. X, Y, Z coordinates of start and end points on products selected for the distance calculation as well as products themselves are identified.

6. Click **OK** to close the dialog boxes.

Improving Performances

As you know, you can set two different work modes prior to performing tasks in this workbench:

- The **Design Mode** uses the original component documents. In other words, geometric data is available. All workbench commands are available if this mode is activated.
- The **Visualization Mode** uses documents in cgr format. Only the external appearance of the component is visualized. The geometry is not available, which may be useful when you deal with sophisticated assemblies with large amounts of date but only need a few components to work on.

This task illustrates the use of the Visualization mode and more precisely one way of improving the performances of the product.

- Make sure that the **Work with the cache system** option is on (by default, the cache is not activated).
  See Cache Management for CATProduct and CATProcess Document.
- Make sure that the **Automatic switch to Design mode** option is on.
  See General settings.
- Make sure that the **Compute exact update status at open** option is manual.
  See General settings.

1. Open the AssemblyConstraint07.CATProduct document.

- Using a cache system considerably reduces the time required to load your data.
- When opening assembly documents in visualization mode, the **Status Unknown** icon is always active, because the application cannot identify whether the assembly is up-to-date or not.

Looking closer at the specification tree, you can notice that the nodes are expandable, components are displayed with the following format: **Instance_Name [Document_Name]** .

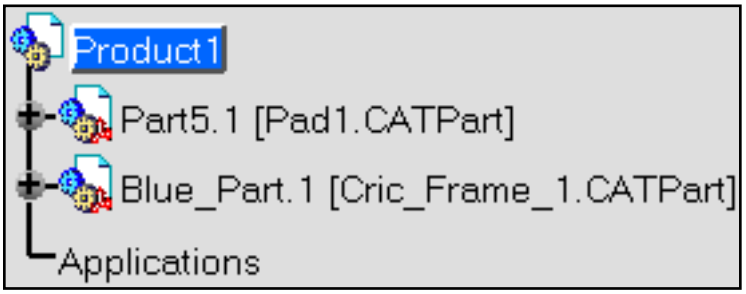

2. Click the nodes to expand the two components.

Looking closer at the specification tree, you can notice that the nodes are not expandable, components are displayed with the following format: **Product_Name (Instance_Name)**.

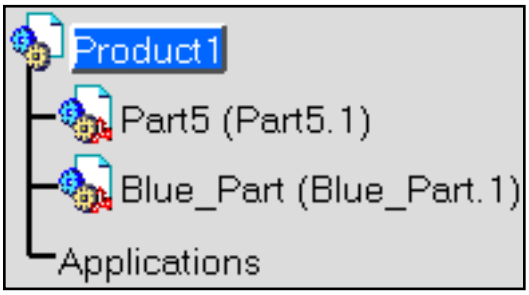

- More information have been loaded from the cgr document, in this sample nothing. Information contained in the cgr document, about annotation, publication or contextual part for example, will be displayed.

- The assembly has performed the update status: the **Update** icon is grayed, the assembly is up to date.

3. Click the **Offset Constraint** icon to define an offset constraint between **Part.5** and **Blue_Part**.

According to the activated options, as you are moving your cursor onto any geometrical element of the parts in visualization mode, you can notice that an eye symbol is located next to your arrow.
This indicates that the geometrical element can be constrained, but take into account that once the it will be selected, the part will loaded in session.

When setting the constraint on the **Part.5**, the CATPart document is loaded and appears under the related component.

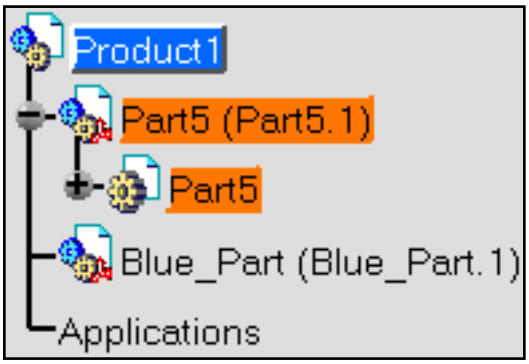

Then on the **Blue_Part**, the CATPart document is loaded and appears under the related component.

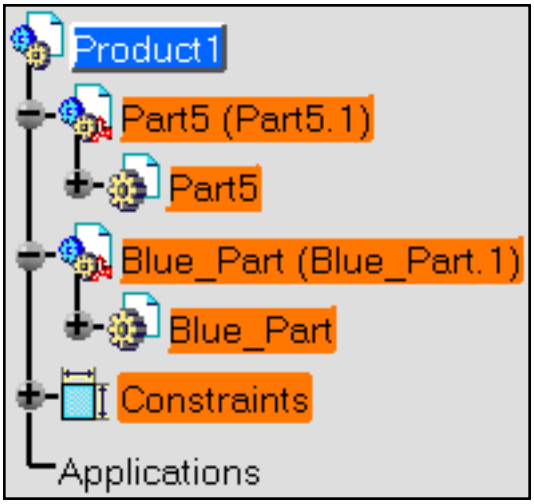

Once the constraint is set, take a look at the tree.

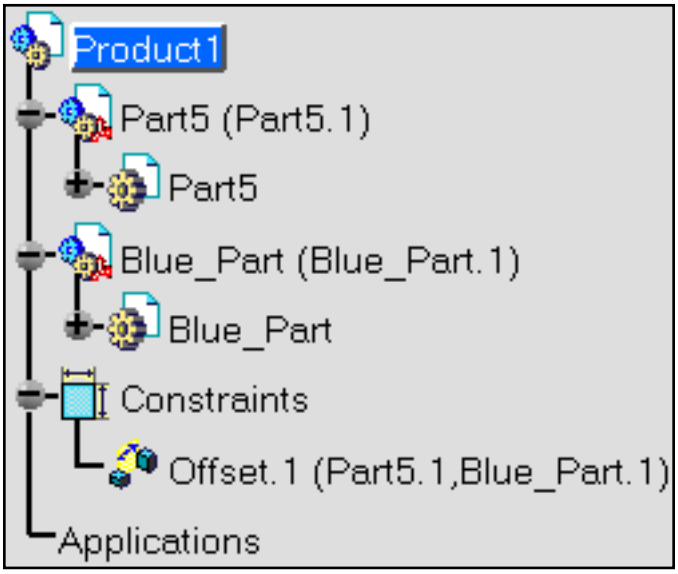

The fact that the application resolves constraints while working in visualization mode is possible only if your document contains data created from Release 10, and not using previous releases.

The application resolves constraints set from published elements from R11 version.

Contextual parts in visualization mode remain in this mode if they are up-to-date, on contextual publication all version, on contextual geometry from R11 version.

Setting the Design or Visualization Mode

To define a mode specific to a component, you simply need to select your component and then use the **Representations -> Visualization Mode** or **Representations -> Visualization (or Design) Mode** contextual commands.

Generating CATPart from Product

This task will show you how to generate a CATPart from a product.

When you are generating the CATPart:

- The command will capture all geometrical representation detected in all activated nodes that are children of the selected node. Each geometrical representation found, will be created in the CATPart as an isolated body.
- Do not mistake the **ObjectName Object -> Activate/Deactivate Component** contextual command with the **Representations -> Deactivate Node** command. This last command deactivates the representation visualization of the component, not the component.
- V4 model will be processed like the standard V4 to V5 interactive translation does it (copy break link result).
- All positions of the geometrical representation are kept in the new CATPart relatively to the higher root product currently opened in the V5 session. In other words, the new CATPart origin is created by the command, using the root higher level of the opened CATProduct, which is not necessary the node selected by the user.
- Visualization Mode is taken into account: if conversion is launched on a CATProduct open in visualization mode, all CATPart and model are processed. In fact they are switched one by one from Visualization Mode to Design Mode, processed and switched back to Visualization Mode. It avoids memory peak and allows you to convert very large products.
- Elements in **No Show** are not converted.
- Empty Geometrical Set and Geometrical Set containing only geometrical features in No Show are not processed (no empty body after creation).
- For V4 model, all wireframe features are created inside one specific Geometrical Set named **Wireframe**.
- Reference planes of created CATPart are in **No Show**.
- Axis System of CATPart are not converted.
- Only the color of part bodies are kept. This is means that color on sub-elements and Part Design features are not kept during process.
- Only one product can be selected, the multi-selection is unavailable.
- All processed objects are renamed with the path of instance in reference product. It allows user to understand easily from which CATPart comes each elements. Notice that it could generates very long names if the product structure is depth (or if instance name are long).
- An empty PartBody is already created (default body of a new part).

Open the Assembly_01.CATProduct document.

1. Select **Product1** in the specification tree.

2. Select **Tools->Generate CATPart from Product...** menu.

The **Generate CATPart from Product** dialog box appears.

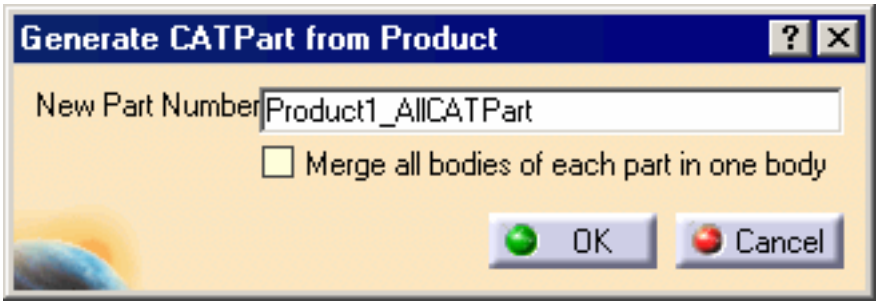

- The default name for the generated part is ***ProductName*_AllCATPart**.
- The **Merge all bodies of each part in one body** option allows you to merge, for each part, in one body all its part bodies through an add operation and all its Geometrical Sets through the **Change Geometrical Set** command.
  - The name of this body is the name of the instance the CATPart with its full path.
  - Names of all geometrical features and bodies are kept as in original CATPart.
  - This option is also efficient for V4 model.

3. Click **OK**.

The **Product1_AllCATPart** has been created.

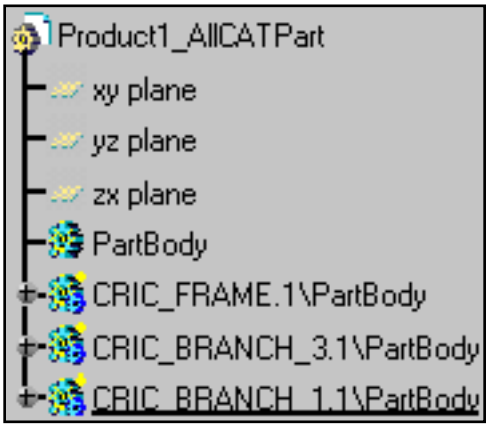

Displaying the Assembly Mass Properties

This task will show you how to display the assembly mass properties.

The mass property of any assembly component is available from its **Properties**, in the **Mechanical** tab. The mass property is also available for component in **Visualization** mode and you can refine the mass to the main body or all the bodies of a Part component. The mass property is set according to the part material. If any any material has been defined, a density of 1 is taken into account.

- Be sure that you are working in **Design** mode, see Cache Management for CATProduct and CATProcess Document.
- Open the Assembly_01.CATProduct document.

The option **Automatic switch to Design mode** is available for this command. For more about this option, refer to Access to geometry in the Infrastructure User's Guide.

1. Right-click **Assembly_01** in the specification tree and select **Properties...** from the contextual menu.

   The **Properties** dialog box is displayed.

2. Select the **Mechanical** tab.

   Three main properties are displayed:

   - Characteristics:
     - Volume
     - Mass
     - Surface
   - Inertia center
   - Inertia matrix

   The **Only main bodies** option allows you to take into account only the main body of the related parts in the assembly, to determine the mechanical properties.

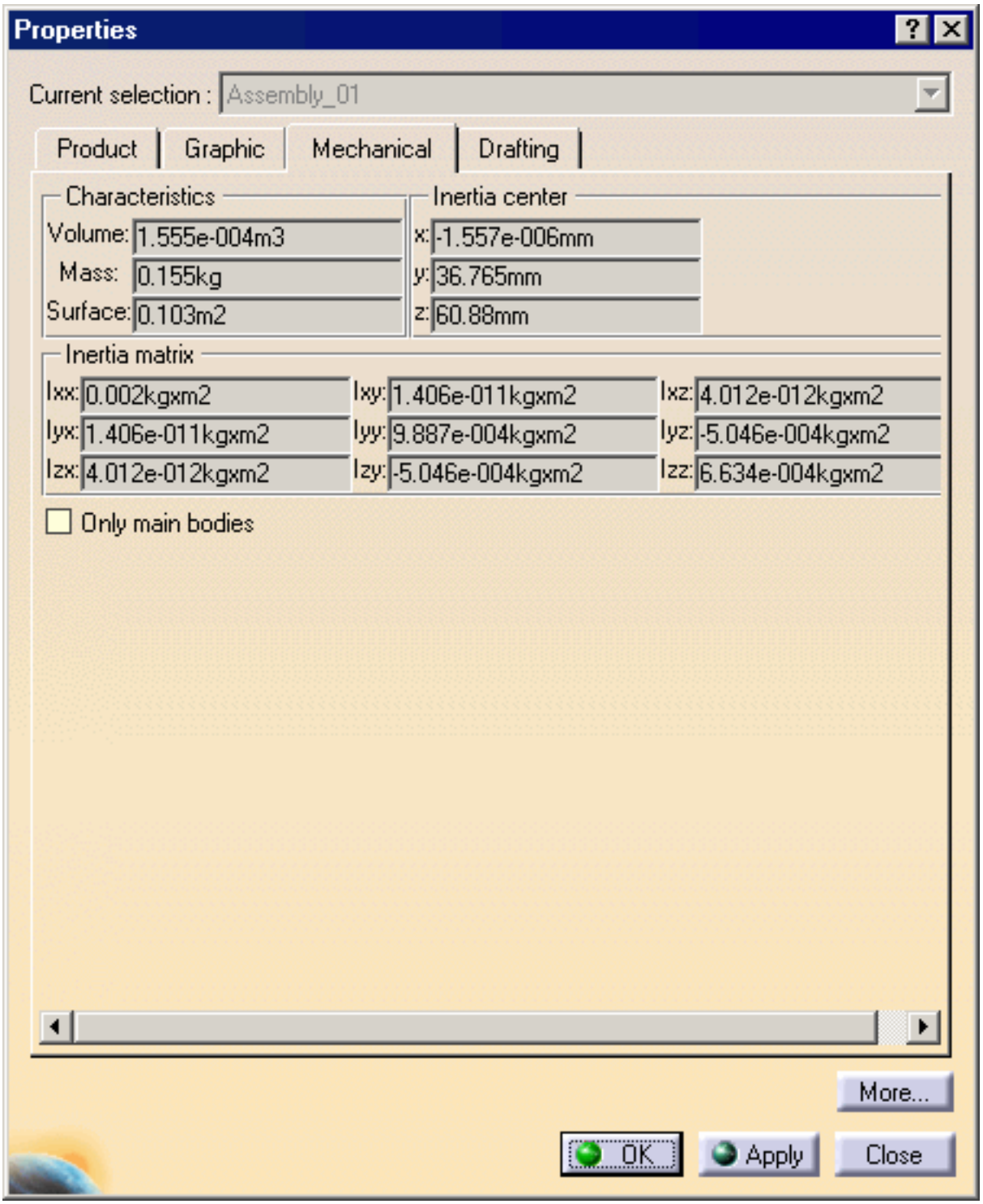

3. Redo the two previous steps, working with the **Visualization** mode.

- The same characteristics and option are displayed.
- Note that values can be different due that the geometry is not exact in **Visualization** mode, and has been approximated. A message is displayed in this case.

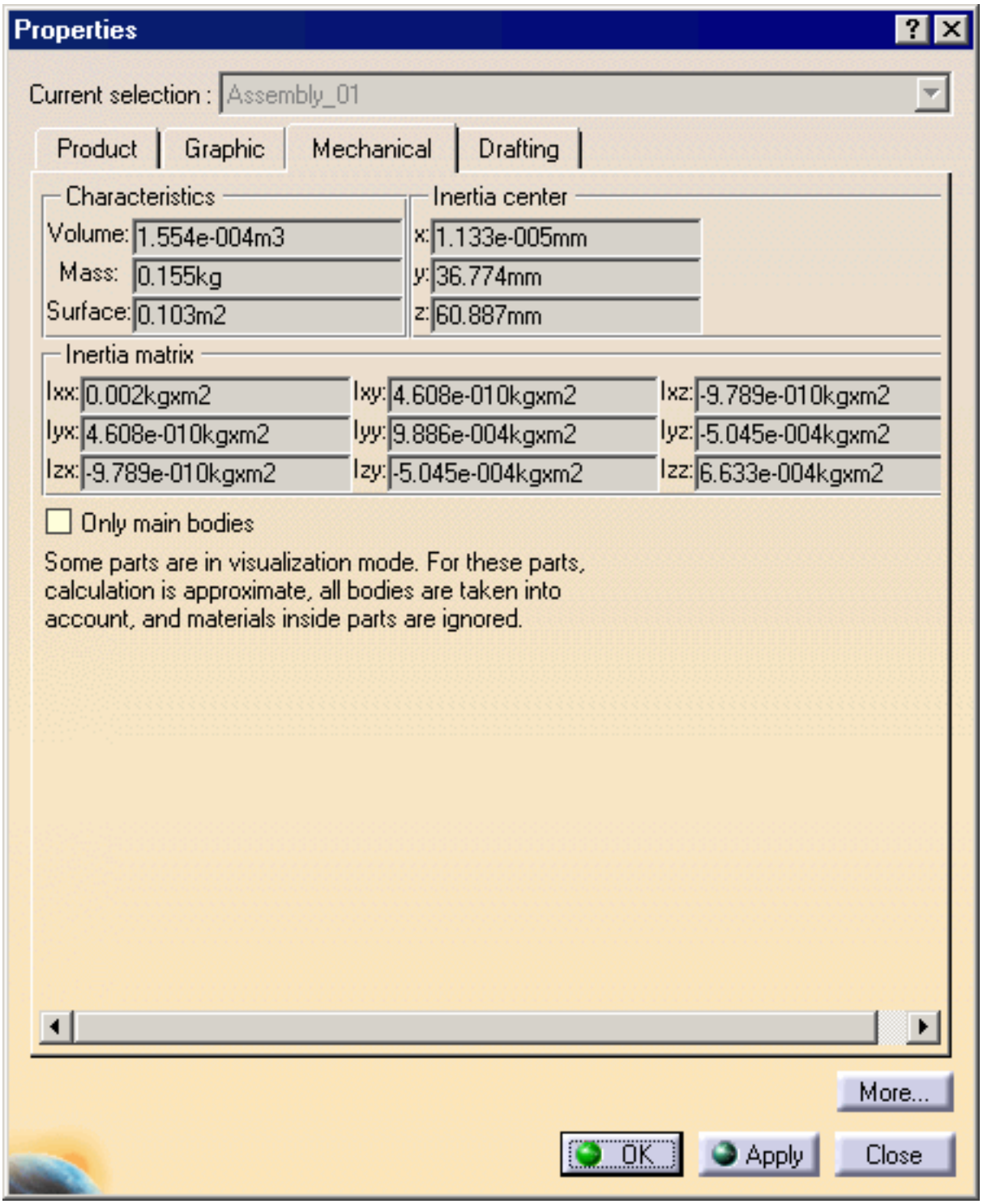
Properties
Current selection : Assembly_01
Product
Graphic
Mechanical
Drafting
Characteristics
Volume: 1.554e-004m3
Mass: 0.155kg
Surface: 0.103m2
Inertia center
x: 1.133e-005mm
y: 36.774mm
z: 60.887mm
Inertia matrix
Ixx: 0.002kgxm2
Ixy: 4.608e-010kgxm2
Ixz: -9.789e-010kgxm2
Iyx: 4.608e-010kgxm2
Iyy: 9.886e-004kgxm2
Iyz: -5.045e-004kgxm2
Izx: -9.789e-010kgxm2
Izy: -5.045e-004kgxm2
Izz: 6.633e-004kgxm2
Only main bodies
Some parts are in visualization mode. For these parts, calculation is approximate, all bodies are taken into account, and materials inside parts are ignored.
More...
OK
Apply
Close

4. Click **OK**.

Modifying an Assembly

Replace Components: click this icon and select a component.

Reconnect a Replaced Representation: Right-click a component and select Representations -> Manage Representations from the contextual menu.

Reconnect Constraints: Double-click a constraint to edit it,

Replacing Components

This task shows you how to replace components into an assembly.

In an assembly you may replace:

A component by a component completely different (a jack by a wheel for example).
A component by a component from the same family (a gearbox by another for example).

Both cases the constraints reconnection is only warranted either:

Component's product structure is the same.
Instance's names of products in the replacing component are the same.
Constraints reference the same published elements.

See Reconnecting Constraints.

1. Select a component in the specifications tree.

2. Click the **Replace Component** icon in the Product Structure Tools toolbar.

Reconnecting a Replaced Representation

This task first consists in replacing a representation then in reconnecting geometrical elements.

Open the Reconnect01.CATProduct document.

1. Right-click on SCREW in the specifications tree.

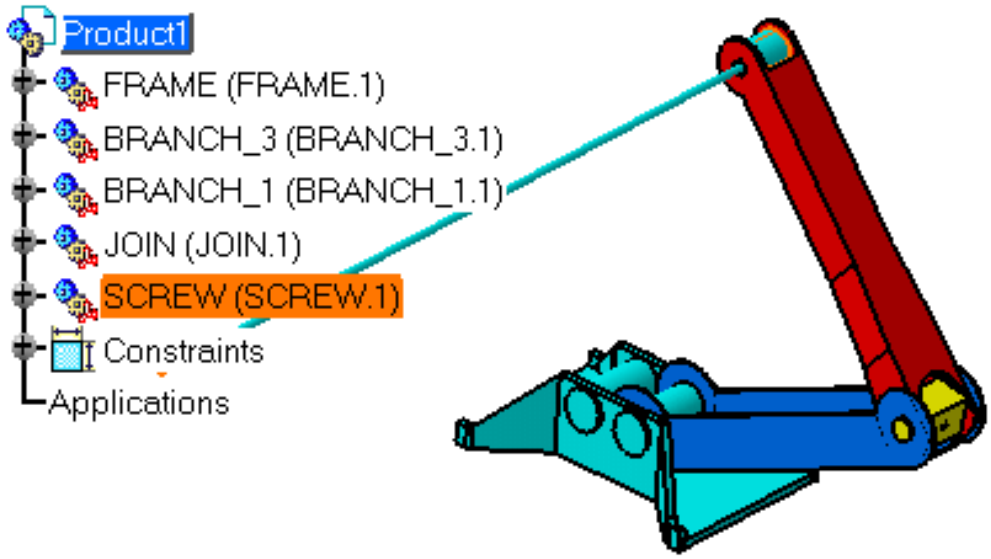

2. Select Representations -> Manage Representations from the contextual menu.

The Manage Representation dialog box is displayed.

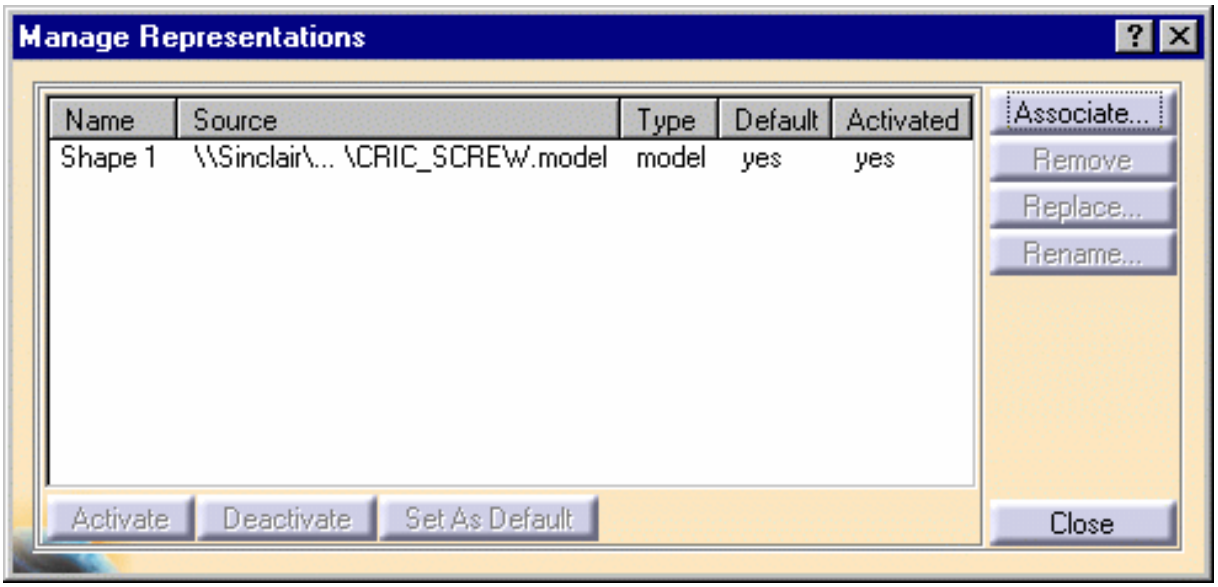

3. Click on CRIC_SCREW.model in the Source field.
4. Click Replace...

   The Associate Representation dialog box is displayed.
5. Navigate to open the CRIC_SCREW_NEW.model.

6. The Reconnect Representation dialog box is displayed.

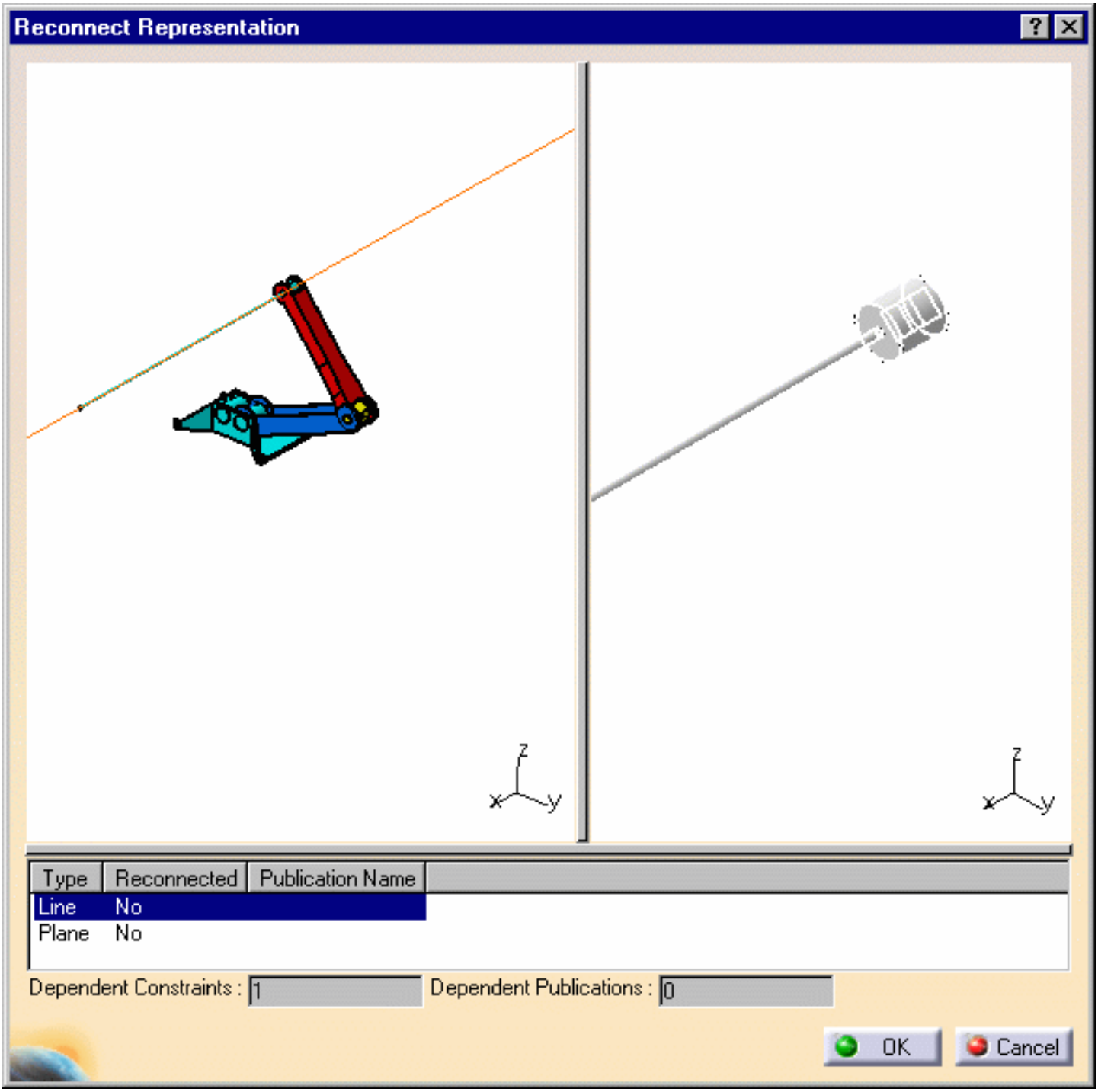

A window containing the assembly with the old representation is displayed in the window to the left of the dialog box.

A window containing only the new representation is displayed to the right of the dialog box. You are going to reconnect the geometrical elements in this window.

5. To reconnect the highlighted geometric element of the old representation, that is a line, select the axis of the new representation.

6. Select Plane and select the circular face as shown to reconnect the plane.

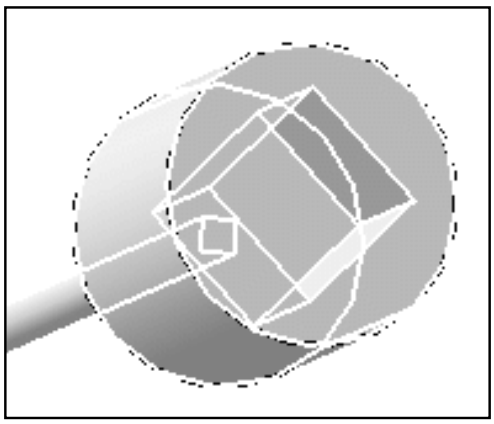

Two "Yes" are now displayed in the Reconnect field.

6. Click OK to validate.

7. Click Close to close the Manage Representation dialog box.

The representation is replaced and constraints are valid.

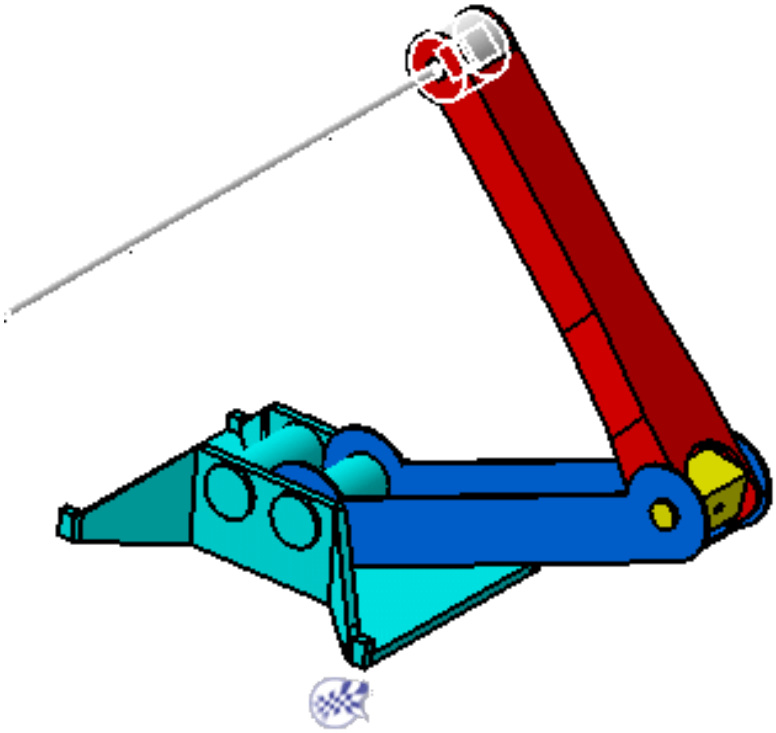

Reconnecting Constraints

Reconnecting constraints means defining new supporting elements for these constraints. You perform this operation to correct mistakes you made while assembling components or the mistakes detected by updates.

This task shows you how to reconnect two constraints.

Open the AssemblyConstraint06.CATProduct document.

1. The assembly contains a contact and a coincidence constraint that need to be reconnected. Double-click the contact constraint to be reconnected.

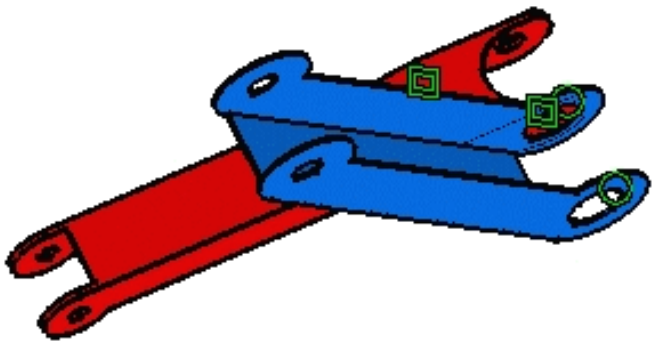

2. In the Constraint Edition dialog box that appears, click More to access additional information.

   The names of supporting elements are now displayed.

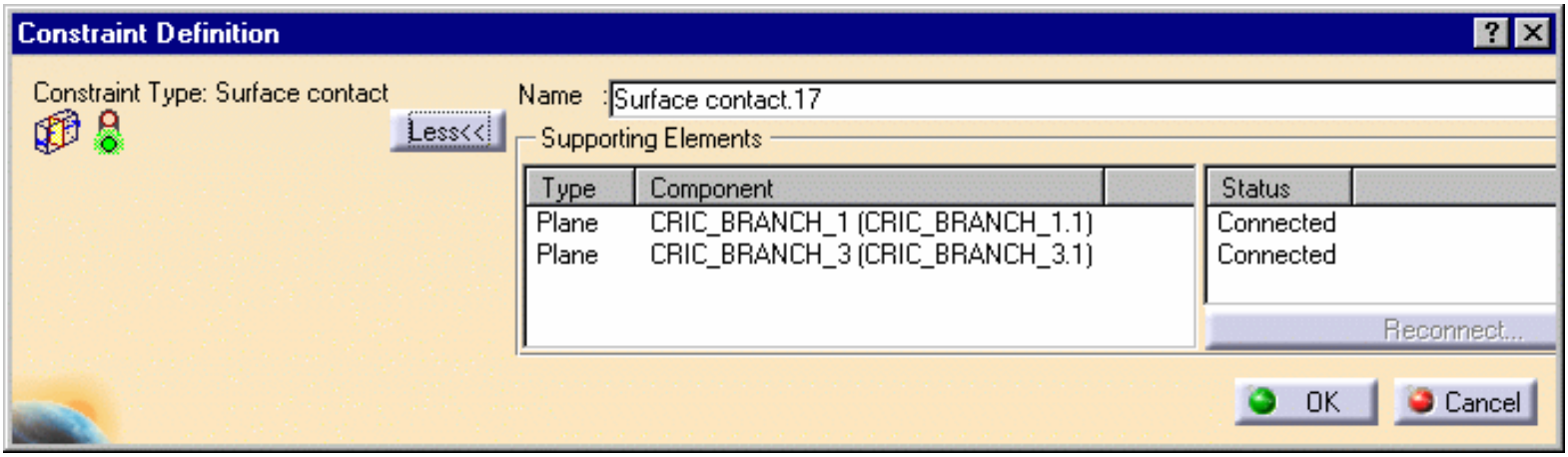

3. Click CRIC_BRANCH_3 then Reconnect.

4. Select the blue face as shown to specify the new supporting face.

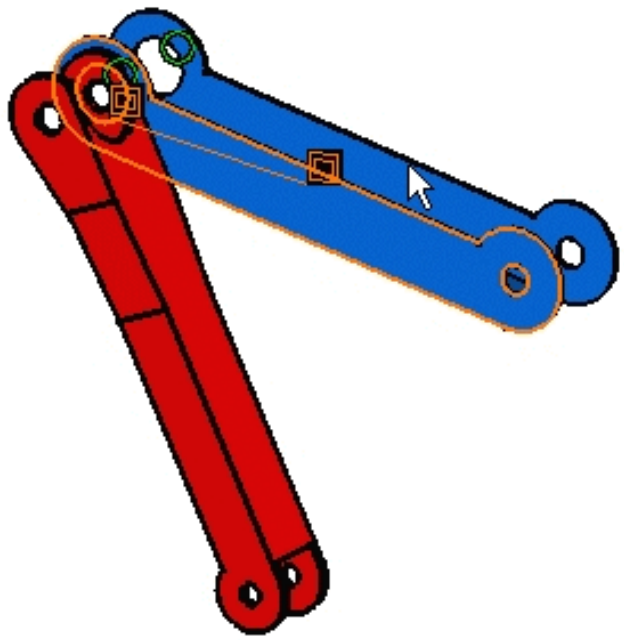

5. Click OK.

   The contact constraint is reconnected:

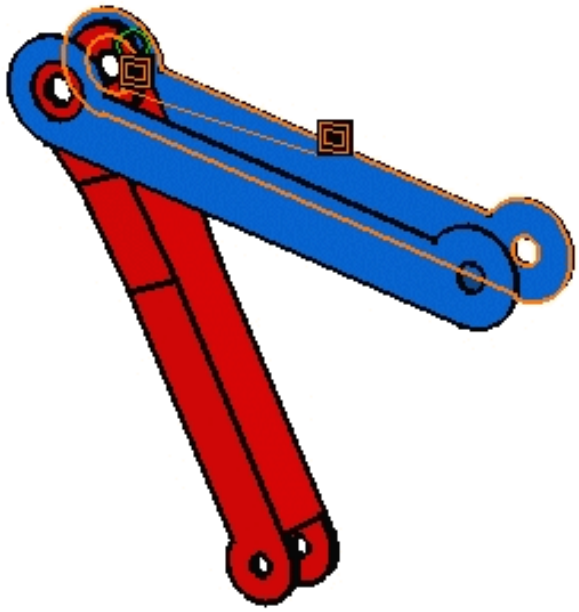

6. Now select the coincidence constraint in the geometry or in the specification tree.

7. Select the Properties contextual command.

8. In the Properties dialog box that appears, click CRIC_BRANCH_3.

9. Click Reconnect...

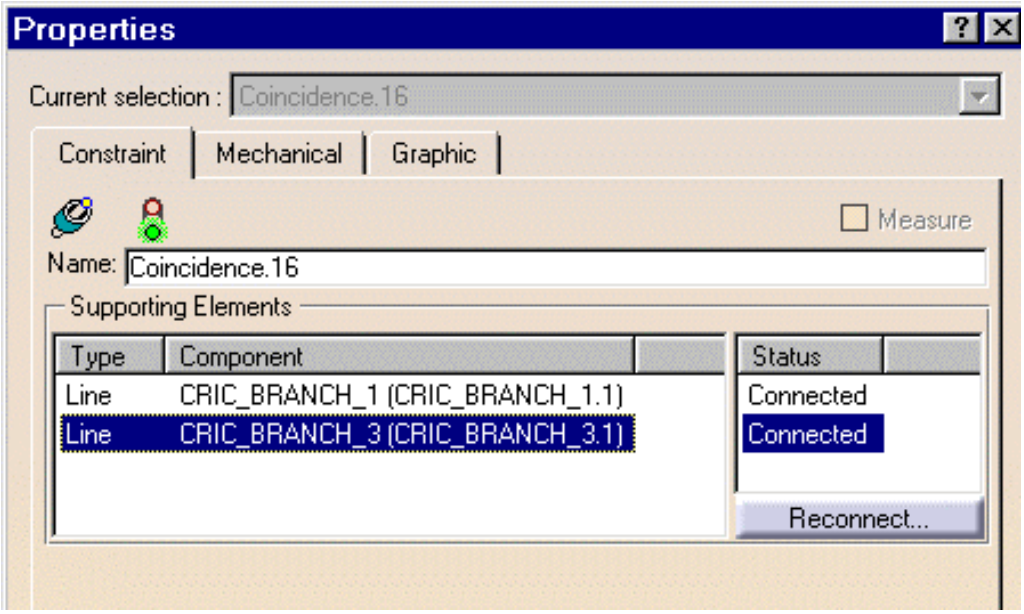

The window that appears displays the components.

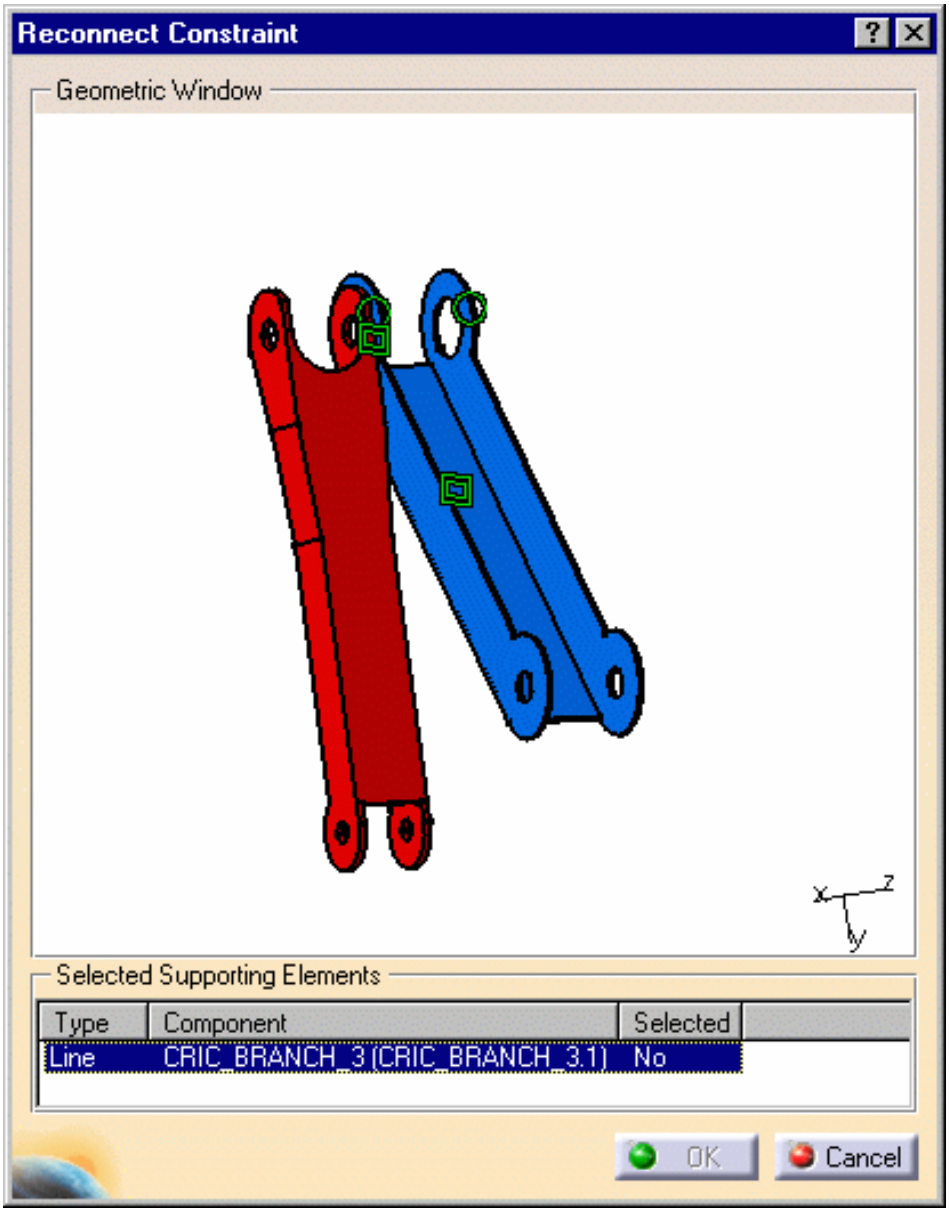

10. Select the axis passing through the circular faces.

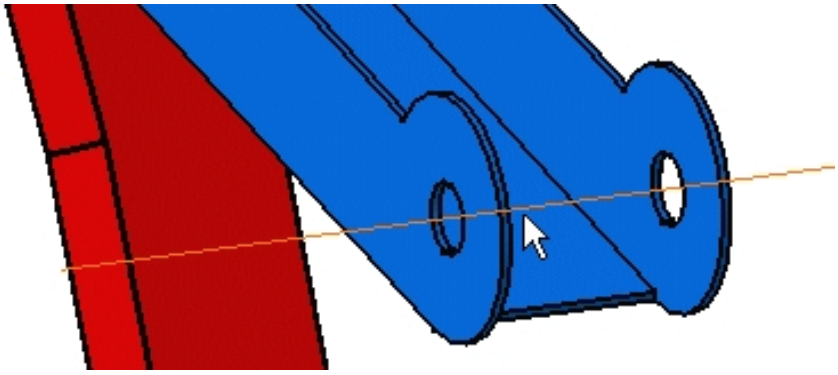

11. Click OK to close the window.

12. Click OK to close the Properties dialog box.

Because they are only two constraints defined on this product, the application can compute several results. This is an example of what you can obtain:

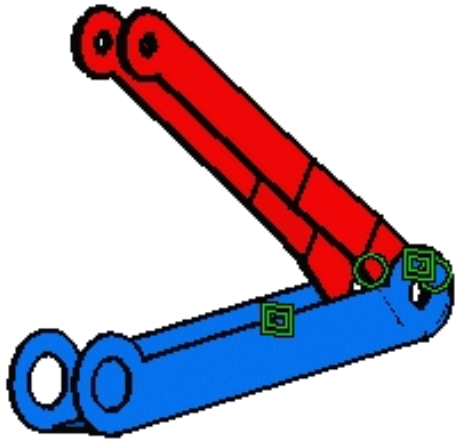

Editing a Part in an Assembly Design Context

This task shows you how to edit a Part (CATPart) in Assembly Design context. See Design in Assembly Context for more information.

Open the ManagingComponents01 Product document.

1. Click on the + sign to the left of the **CRIC_SCREW (CRIC_SCREW.1)** component in the specification tree.

   The CATProduct is identified by the Product document icon.

2. Double-click on the **CRIC_SCREW** to open the Part Design workbench.

   Do not mistake the Product document (CATProduct) for the Part document (CATPart).
   The CATPart is identified by the Part Design document icon.
   If the Product document containing the Part document is set to **Visualization Mode**, editing the Part document switch automatically the Product document to **Design Mode**. This is not an Assembly Design behavior because the **Design Mode** is the only mode for Part document.

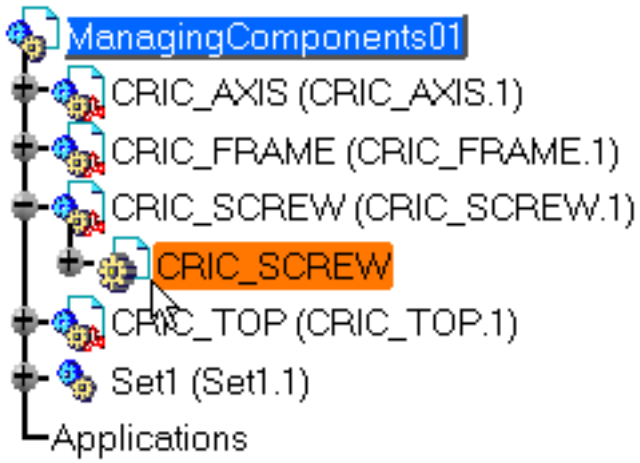

   The Part Design workbench is displayed.

3. Click on the + sign to the left of Part Body.

4. Double-click the feature you need to edit. For example, double-click on Pad2 to display the Pad Definition dialog box. You can then enter the parameters of your choice.

For information about Part Design and the Sketcher , please refer to Part Design User's Guide and Dynamic Sketcher User's Guide respectively.

5. Once you have edited the part, double-click on ManagingComponents01 to return into Assembly Design workbench. The specification tree remains unchanged.

6. Double-click on the part CRIC_SCREW to open Part Design workbench again.

7. Select any circular face of CRIC_BRANCH1 and enter the Sketcher workbench.

8. Create a circle and set a coincidence constraint for example:

9. Exit from the Sketcher and double-click on ManagingComponents01 to return into Assembly Design workbench.

Assembly Design workbench is then displayed and a green wheel is added to CRIC_SCREW in the tree to represent the contextual nature of the component: .
Note however that this symbol is displayed only if the option Keep link with selected object is selected. For more information, please refer to Part Design User's Guide.

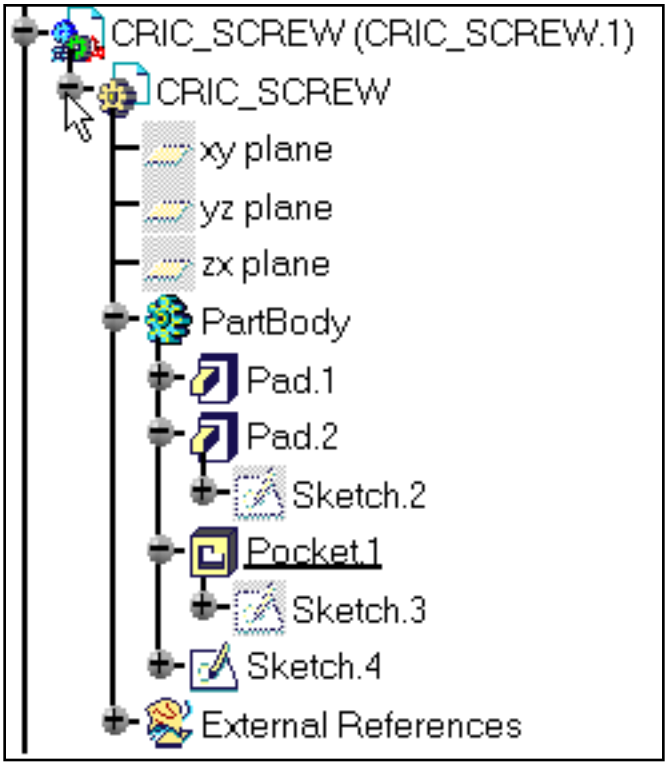

Contextual components are considered as the children of the components used for their creation. This means that if you delete these support components, you will need to consider if you wish to delete contextual components or not. Remember, you can choose to delete affected elements by checking the Delete all children option in the Delete dialog box.

Copy/Paste As Special command

If you wish to apply the Copy -> Paste As Special command to parts included into your assembly, remember the following: if you have already used the As Result With Link option when pasting Part.1 onto Part.2, you then cannot paste Part.2 onto Part.1 using the As Result With Link option. An error message is issued informing you that a cycle has been detected. For more about Copy -> Paste As Special command, please refer to Infrastructure User's Guide.

Assembly Features

Prior to creating assembly features, keep in mind the following:

- You can create assembly features only between the child components of the active product. The active product at least must include two components which in turn must contain one part at least.
- You cannot create assembly features between two geometric elements belonging to the same component.
- You can only create assembly features on a component which allows part feature creation to be performed in assembly context. This excludes cross references, the component containing the inputs is contextual from one or several affected components, and external references, affected components which are already referenced from another assembly document.

See Assembly Features reference for more information.

The different assembly features you can create are:

Split: click this icon, select the splitting face or surface, define the parts you need to split and define the portion of material to keep.

Hole: click this icon, select a face to define the hole location, define the parts on which you need to make the hole and define your hole.

Hole Series: in the Assembly Features Definition dialog bow, click the Series tab and select the parts of interest prior to defining holes.

Pocket: click this icon, select the profile to be extruded, define the parts from which you need to remove material and define the pocket.

Remove: click this icon, select the body to removed and define the parts from which you need to remove material.

Add: click this icon, select the body to be added and define the parts to which you need to add material.

Assembly Split

The Assembly Split command splits parts rapidly and very productively. You could actually split each part in the Part Design workbench, but the Assembly Split command is more productive since it requires only one interaction.

This task shows you how to split a product including four parts. You will actually split three of these parts by using a surface.

Open the AssemblySplit.CATProduct document. Ensure the design mode is on.

1. Click the **Split** icon:
2. Select the splitting surface, that is Loft.1.

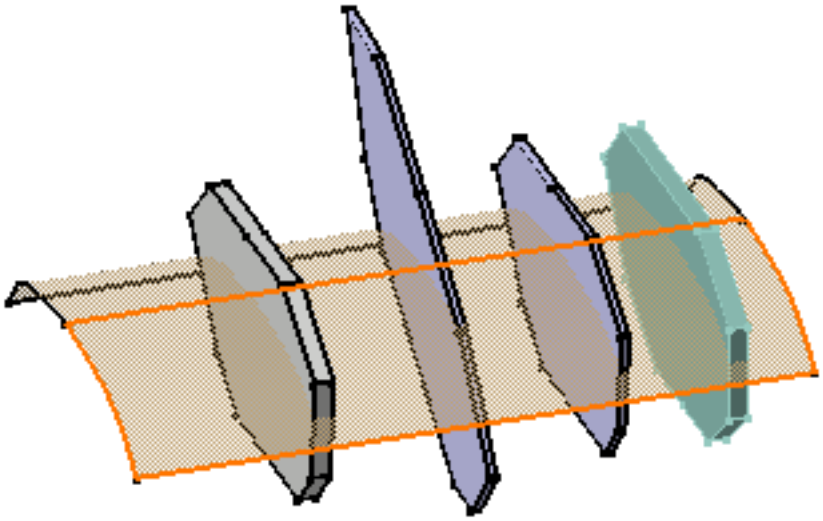

The dialog box that appears displays the names as well as the paths of the parts that may be affected by the split action.

The assembly feature's name now appears in the top left corner of the dialog box. If desired, you can edit this name.

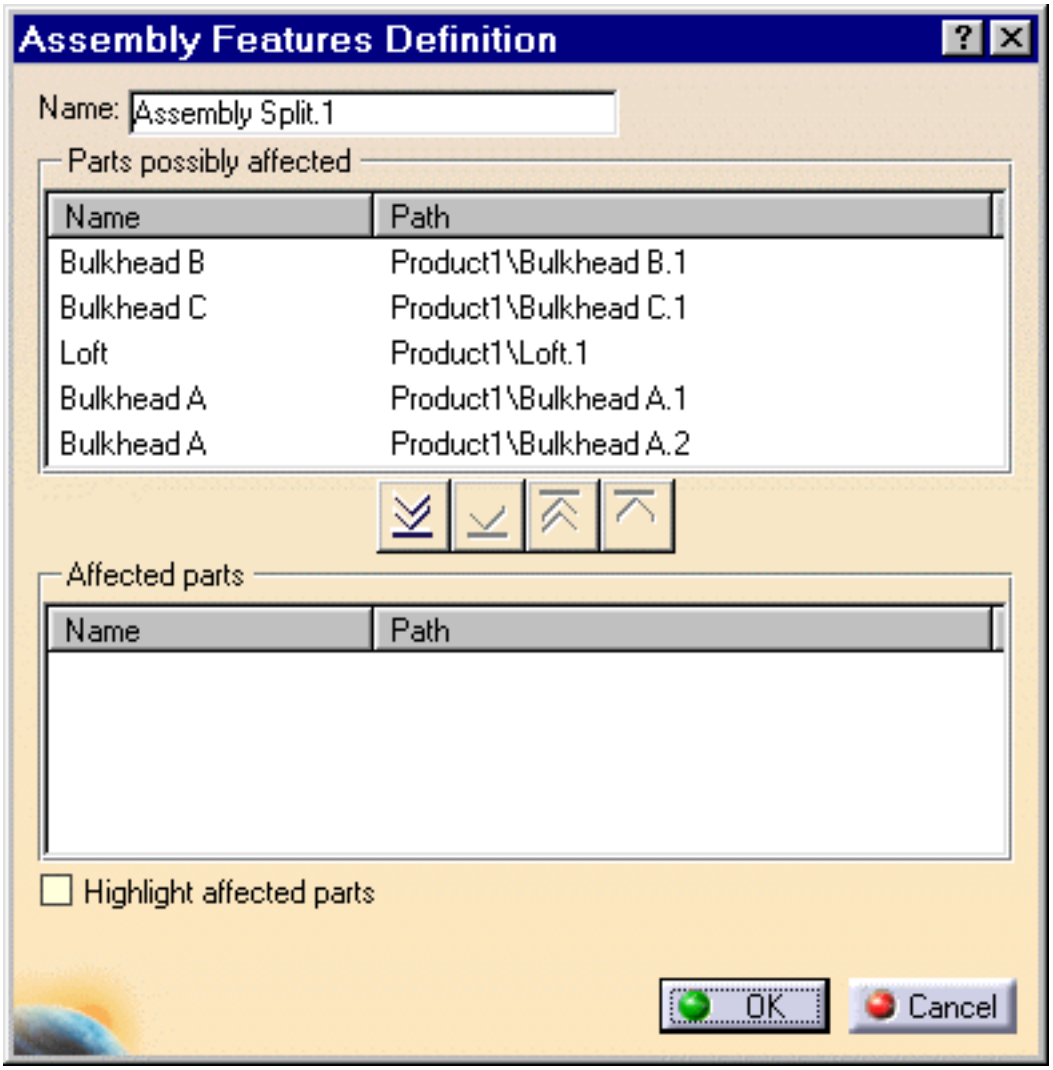

3. The frame 'Affected parts' is exclusively reserved for the parts you wish to use. For the purposes of our scenario, you are going to split Bulkhead A.1, Bulkhead A.2 and Bulkhead B. Note that Bulkhead A.2 and Bulkhead A.1 are two instances of Bulkhead A.

   Move the parts to the list 'Affected parts". To do so, select Bulkhead A.1 and click the button.

4. Repeat the operation for the other two parts. Alternatively, double-click each part.

   The other three buttons let you move the names of the parts from one list to another too:

   moves all selected parts to the list 'Affected parts'

   moves all selected parts to the list 'Parts possibly affected'

   moves the selected part to the list 'Parts possibly affected'

   The Split Definition dialog box that has appeared, indicates the splitting element.

5. Arrows in the geometry indicate the portion of parts that will be kept. If the arrows point in the wrong direction, click them to reverse the direction.

6. Check the option Highlight affected parts to clearly identify the parts to split.

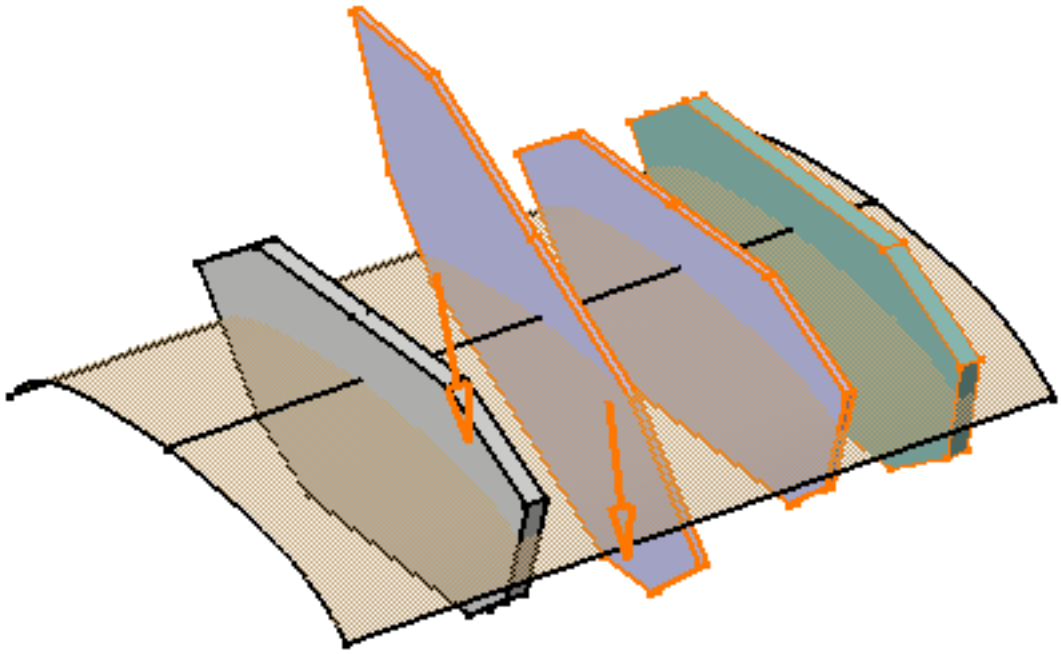

7. Click OK to confirm.

The parts are split. Material has been removed from Bulkhead A.1, Bulkhead A.2 and Bulkhead B. Conversely, Bulkhead C is intact.

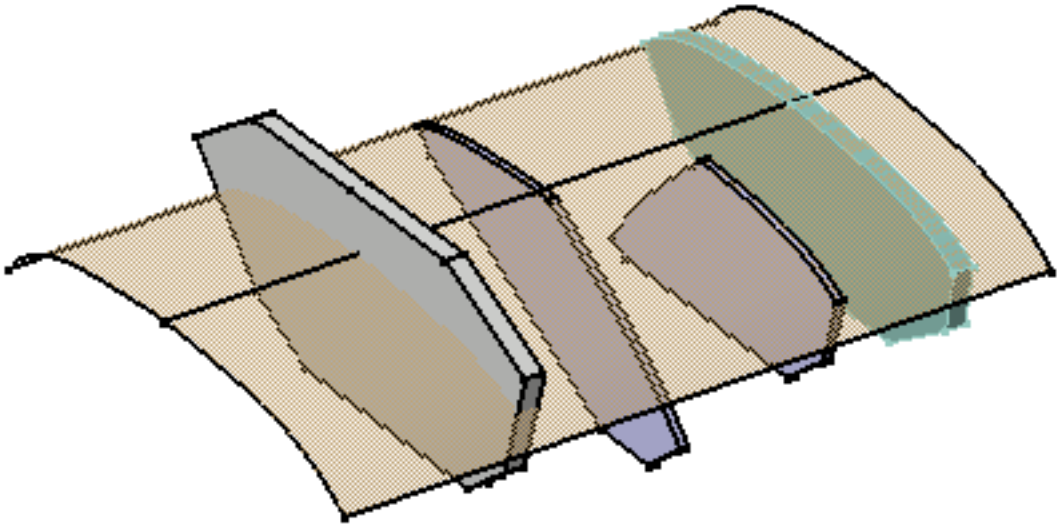

A new entity 'Assembly Features' appears in the specification tree. It contains the assembly split referred to as 'Assembly Split.1" and the name of affected parts.

Moreover, this feature has generated a split feature in Bulkhead B and two split features in Bulkhead A.1 and Bulkhead A.2, these parts being instances of a same original part. An arrow symbol identifies these splits in the tree, meaning that a link exists between Assembly Split.1and them.

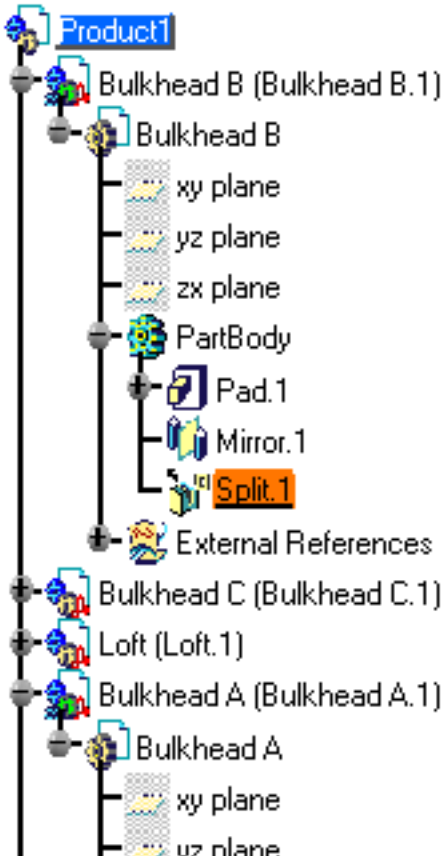

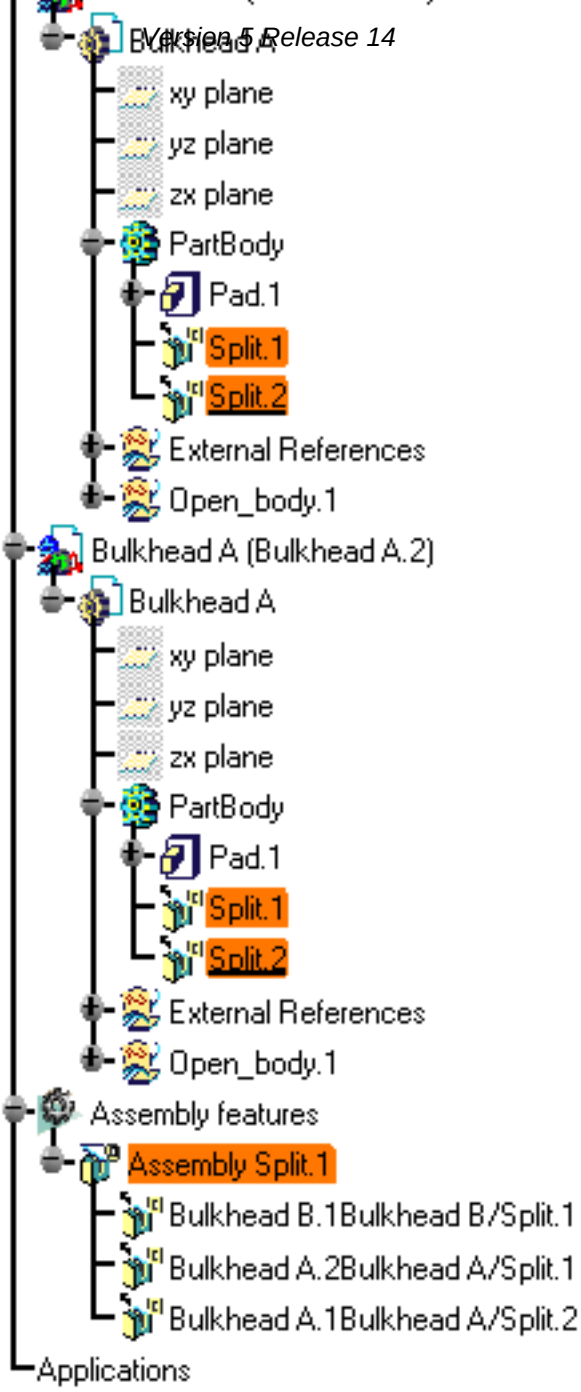

Editing an Assembly Split

To edit an assembly split, double-click 'Assembly Split.X' entity then you can either:

- modify the list of the parts you wish to split
- change the splitting surface
- redefine the portions of material to keep

If you need to cut the link between a generated split and Assembly Split.X, just use the Isolate contextual command. You will then obtain a 'traditional' split feature as if you had designed it in Part Design and you will be able to edit it in Part Design.

Reusing Part Design Splits

To increase your productivity, you can create Assembly splits from existing Part Design splits, or more precisely by reusing the specifications you entered for designing Part Design splits. To do so, just proceed as follows:

1. Click the **Split** icon .
2. Select the Part Design split of interest.
3. Both the Split Definition and the Assembly Features Definition dialog boxes display. You then just need to specify the parts to split.

The assembly split inherits the specifications as displayed in the Part Design Split Definition dialog box. You can edit these specifications at any time. Editing an Assembly feature created in this way does not affect the specifications used for the Part Design feature.

Reusing Assembly Design Splits

The application also lets you reuse Assembly Splits specifications to accelerate the design process. In this case, you just need to select the existing assembly split, click the Assembly Split icon and then select a face. Only the Assembly Features Definition dialog box appears to let you determine the parts of interest.

Assembly Hole

The Assembly Hole command lets you create holes going thru different parts. You could actually create holes for each part in the **Part Design** workbench, but the Assembly Hole command available in Assembly Design workbench creates holes more rapidly and more productively: the command creates a hole going thru several parts in only one interaction.

You can create distinct shapes of holes going thru the individual parts of an assembly and this, in one shot. To know how to do this, please refer to Using Hole Series.

This task shows you how to create a hole on a product including three parts, but you will create the hole on two parts only.

Open the AssemblyHole.CATProduct document.

1. Click the **Hole** icon:

2. Select the purple face as shown to define the location of the hole:

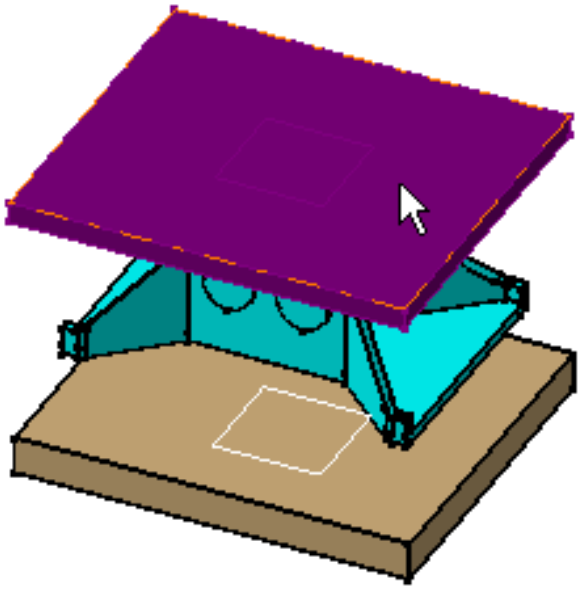

The **Assembly Features Definition** dialog box appears.

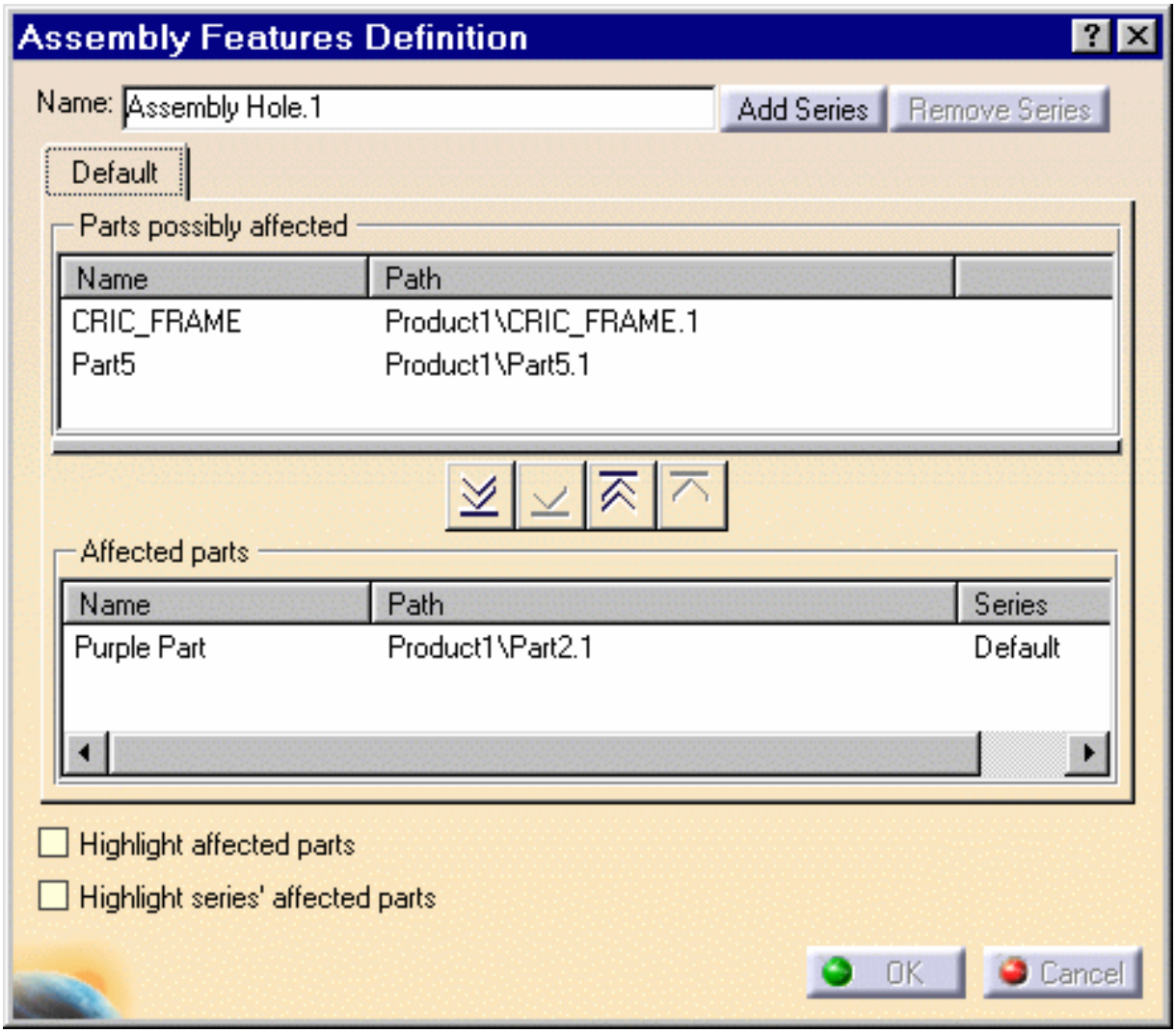

The dialog box displays the names as well as the paths of the parts that may be affected by the hole creation.

The assembly feature's name appears in the **Name** field. If desired, you can edit this name.

The frame **Affected parts** is exclusively reserved for the parts you wish to use. Purple Part is displayed in this frame.

Note that the **Hole Definition** dialog box is displayed.

3. As you wish to create a hole between Part5 and Purple Part, move Part5 to the list **Affected parts**.

The other three buttons lets you move the names of the parts from one list to another too:

- moves all selected parts to the list **Affected parts**.
- moves all selected parts to the list **Parts possibly affected**.
- moves the selected part to the list **Parts possibly affected**.

4. Check the option **Highlight affected parts** to clearly identify the parts.

At this point, you can now define the hole you wish.

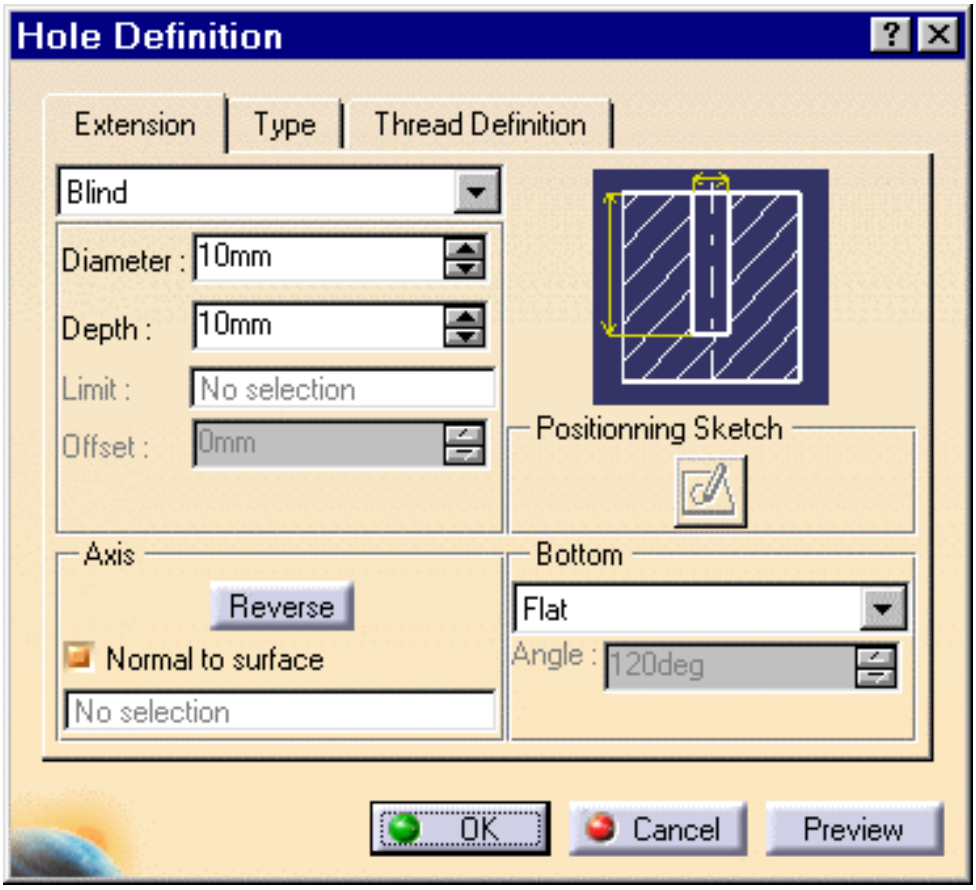

You cannot edit the hole positioning sketch from the assembly hole definition, this why the icon still grayed.
If you wish to edit it, double-click the **Positioning Sketch** created in the part from which you have defined the assembly hole, or edit the reused hole.

Whatever hole you choose, you need to specify the limit you want. If you do not specify a depth value, four types of limits are available:

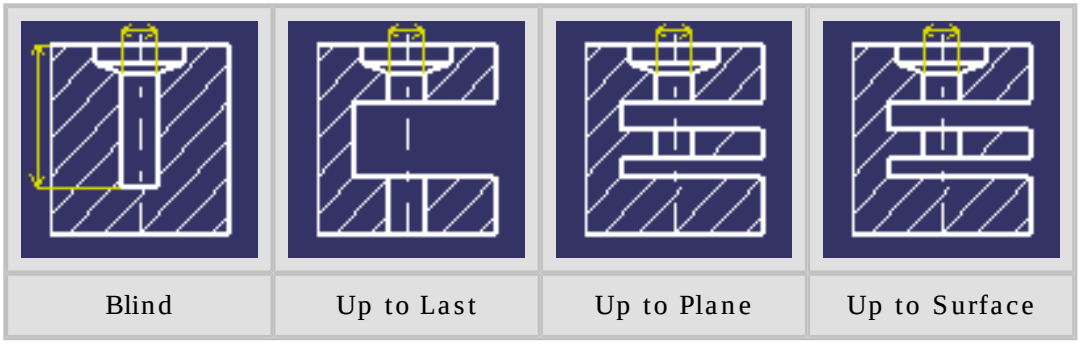

5. Set the **Up to Last** option. The application will extend the hole from the sketch plane to the last face encountered.

6. Enter **25mm** as the diameter value.

By default, the application creates the hole normal to the sketch face. But you can also define a creation direction not normal to the face by deselecting the Normal to surface option and selecting an edge or a line.

If you are designing a blind hole, you can set the **Bottom** option to **V-Bottom** to create a pointed hole and then enter the angle value of your choice.

Clicking the **Type** tab lets you create the following holes:

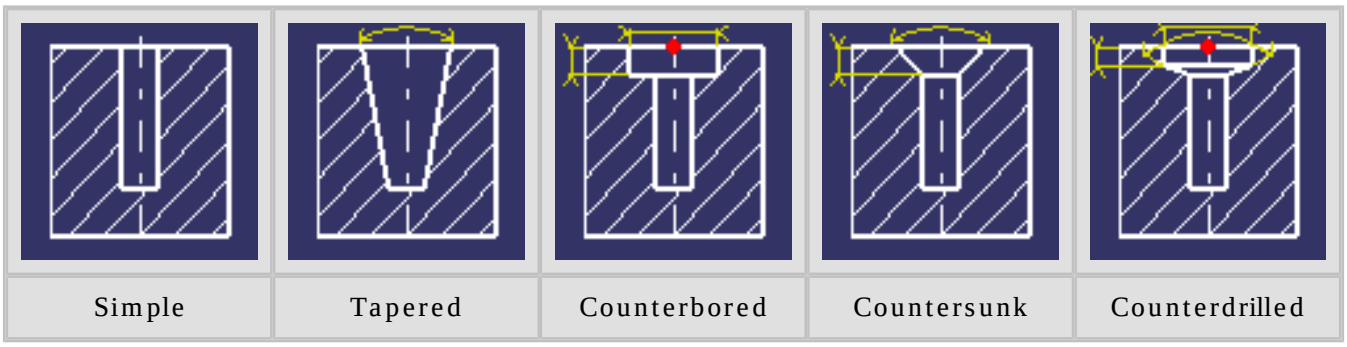

Make sure the option **Simple** is set.

Clicking the Thread Definition tab lets you access to the options defining threads. For more information about threads and holes, please refer to **Part Design** User's Guide.

7. Click **OK** to confirm.

The hole is created on Part 5 and Purple Part. Conversely, CRIC_FRAME is intact.

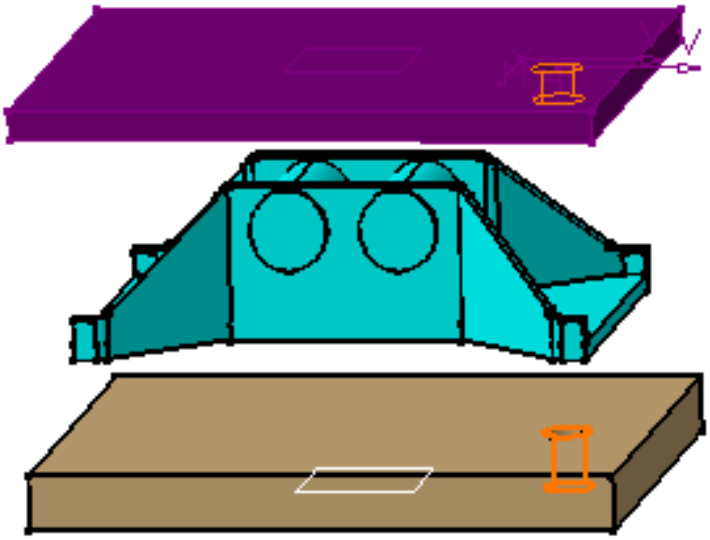

A new entity **Assembly features** appears in the specification tree. It contains the assembly hole referred to as **Assembly Hole.1** and the affected parts.

Moreover, this feature has generated a hole in each part. An arrow symbol identifies these holes in the tree, meaning that a link exists between Assembly Hole.1and them.

Editing an Assembly Hole

To edit an assembly hole, double-click **Assembly Hole.X** entity then you can either:

- modify the list of affected parts.
- edit the hole.

If you need to cut the link between a generated hole and Assembly Hole.1, just use the **Isolate** contextual command. You will then obtain a classical hole as if you had designed it in Part Design and you will be able to edit it in Part Design.

Reusing Part Design Holes

To increase your productivity, you can create Assembly holes from existing Part Design holes, or more precisely by reusing the specifications you entered for designing Part Design holes. To do so, just proceed as follows:

Before reusing Part Design hole, take note that:

- You cannot reuse hole for which the reference geometry for creation is not a planar surface.
- You cannot reuse a hole with the **Up to next** option, because this option is not applicable for assembly hole.
- You cannot re-affect an assembly hole on the part which contains the part hole, except if the diameter of the assembly hole exceed the diameter of the part hole, or if the assembly hole location is different. In fact, you cannot drill vacuum.

1. Click the **Hole** icon:

2. Select the Part Design hole of interest.

3. Both the **Hole Definition** and the **Assembly Features Definition** dialog boxes display. You then just need to specify the parts to pierce.

   The assembly hole inherits the specifications as displayed in the **Part Design Hole Definition** dialog box. You can edit these specifications at any time. Editing an Assembly feature created in this way does not affect the specifications used for the Part Design feature.

Reusing Assembly Design Holes

The application also lets you reuse Assembly Holes' specifications to accelerate the design process. In this case, you just need to select the existing assembly hole, click the Assembly hole icon and then select a face. Only the Assembly Features Definition dialog box appears to let you determine the parts to drill.

Using Hole Series

The new concept of "hole series" lets you create **different holes** cutting the individual parts of an assembly. The "series" option, available in the Hole command lets you determine the parts that are to be cut or not, and the hole types to define for these parts.

In this task, you will create one assembly hole feature composed of three different holes cutting four parts.

Open the AssemblyHole2.CATProduct document.

1. Click the **Hole** icon .
2. Select the upper purple face to define the location of the hole:

   The Hole Definition and Assembly Features Definition dialog boxes appear.

   The Assembly Features Definition dialog box displays the names as well as the paths of the parts that may be affected by the hole creation. For more details, refer to the task "Assembly Hole".

3. Click the button to move all parts to the list 'Affected parts'.
4. To define the hole cutting the assembly, set these parameters: " Up to Last", 10 mm as the diameter value, "Counterbored", 18 mm as the diameter option.

   The application previews the counterbored hole.

Creating Series

A hole series gathers one or more assembly parts that must be cut by a hole different from the hole previously defined.

5. Click the button "Add Series".

   A new tab "Series 1" displays, containing all parts selected in the "affected parts" field of the Default tab.

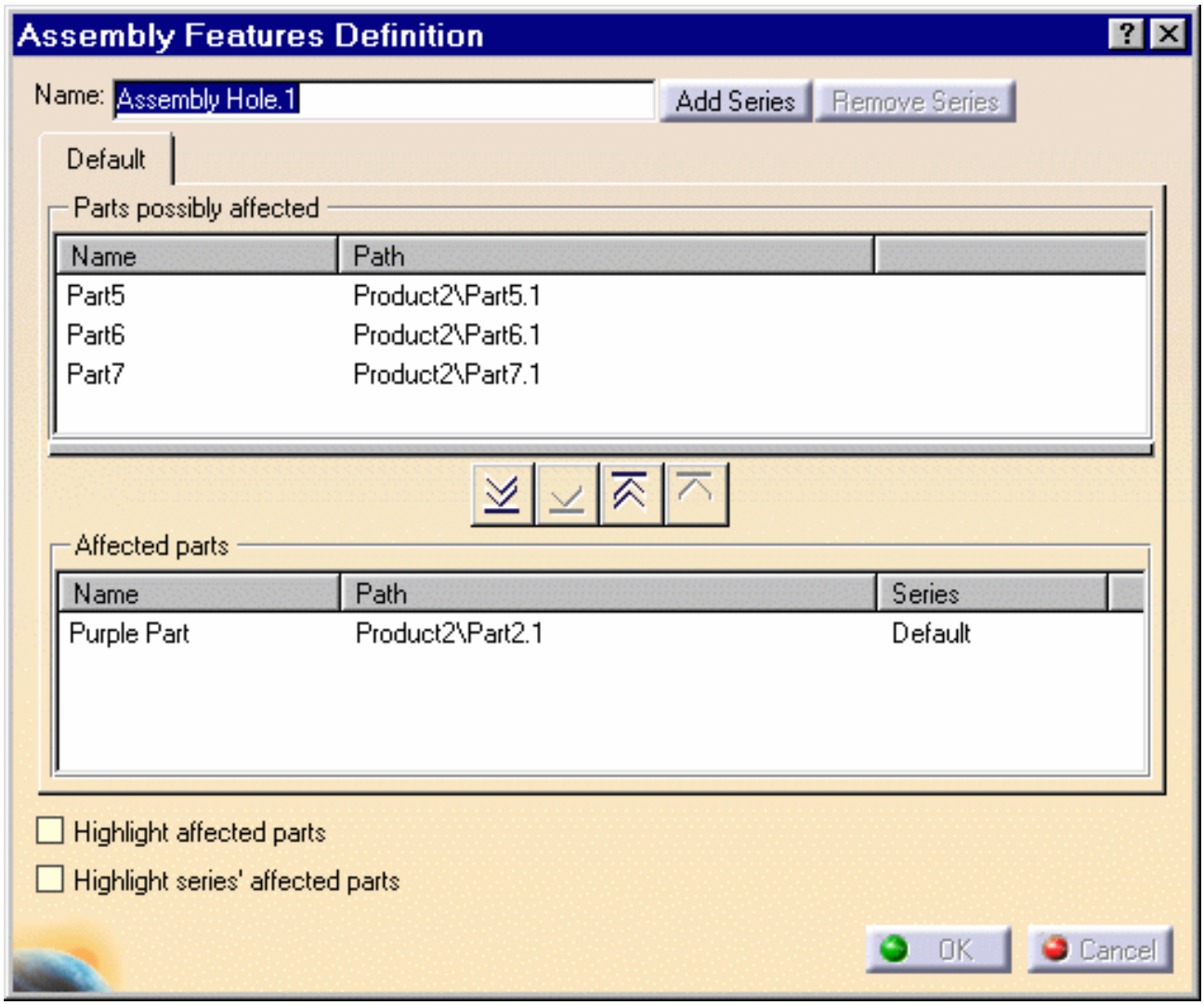

6. To identify the parts you wish to include in Series 1, multi-select Part5 and Part6 then click the Select button.

The mention "Yes" now displayed in the Selected field, confirms that Series 1 includes these parts that will be cut by a hole which parameters are still to be defined.

Series 1 then includes two parts through which the hole will pass. On the contrary, Part7 and Purple part are excluded from the series as indicated by the mention "No".

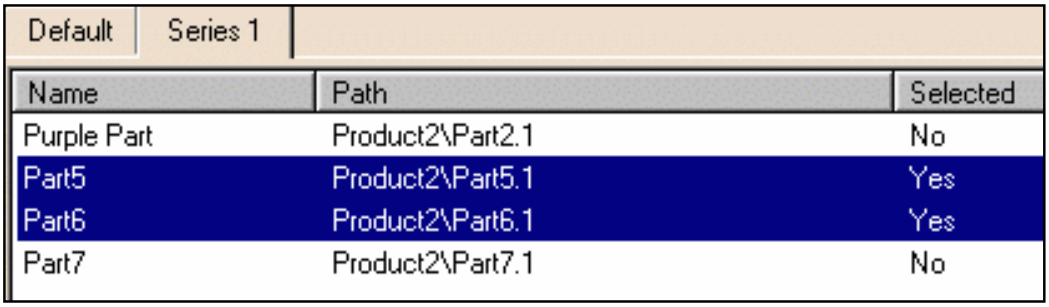

7. To define the hole you need for Series 1, enter these parameters: "Up to Last", 12 mm as diameter value and "Simple" in the Hole Definition dialog box.

The application previews this hole type on the purple face.

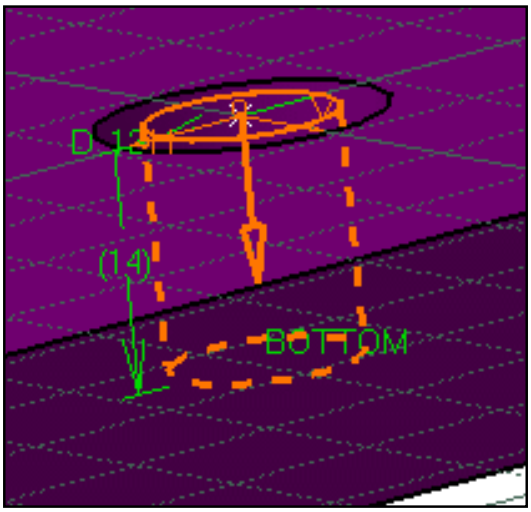

8. Click the button "Add Series" again to create another series.

A new tab "Series 2" displays, containing all parts selected in the "affected parts" field of the Default tab..

9. Select Part 7 then click the Select button to set this part as the only part composing the series.

The mention "Yes" confirms that this part will be cut by a new hole which parameters are still to be defined.

Another way of selecting the part is to double-click its name.

10. To define the hole you need for Series 2, enter these parameters: "Blind", 10 mm as diameter value, 160mm as depth value, "V-Bottom", "Simple", "Threaded" and the thread values of your choice in the Hole Definition dialog box.

The application previews this hole type on the purple face.

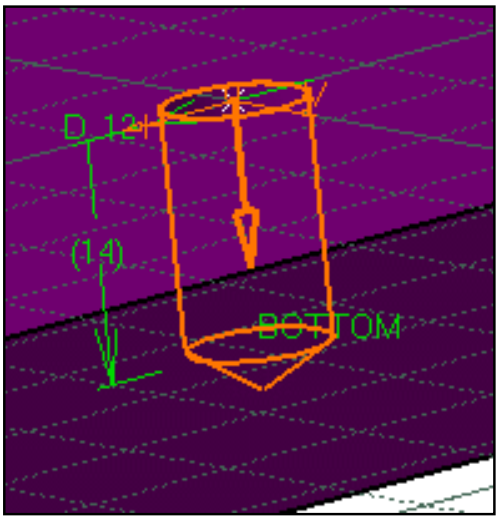

Note that the Default button removes one part from a series.

11. Click OK to confirm.

The hole defined through three series cuts the assembly.

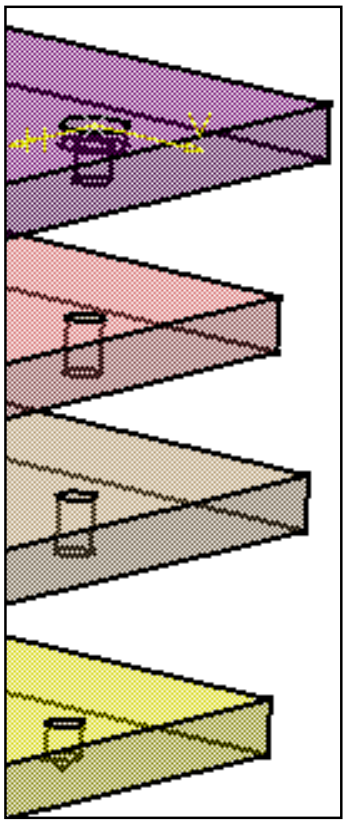

In the specification tree, the Assembly Hole node displays the different parts cut by the Hole feature. Note that the icon identifying the threaded hole differs from the other icons.

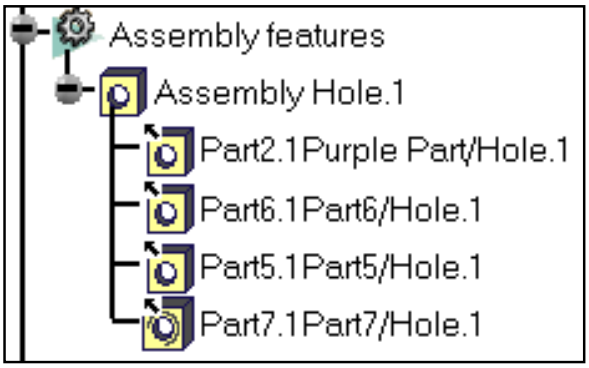

Assembly Pocket

Creating a pocket consists in extruding a profile and removing the material resulting from the extrusion. You could actually create pockets for each part in the **Part Design** workbench, but the Assembly Pocket command available in Assembly Design workbench creates pockets more rapidly and more productively: the command creates a pocket on several parts in only one interaction.

This task shows you how to create a pocket by removing material from two parts.

Open the AssemblyHole.CATProduct document and sketch a rectangle on the purple face.

1. Click the **Pocket** icon

2. Select the profile you created.

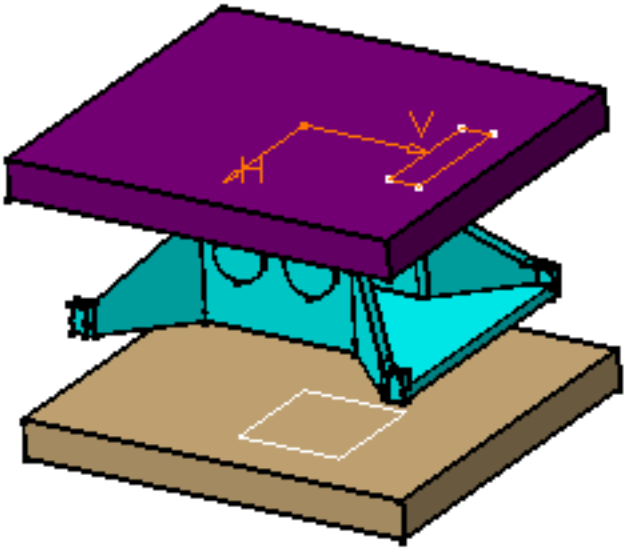

You can use profiles sketched in the Sketcher workbench, sub-elements of sketches or planar geometrical elements created in the Generative Shape Design workbench.

The **Assembly Features Definition** dialog box appears.

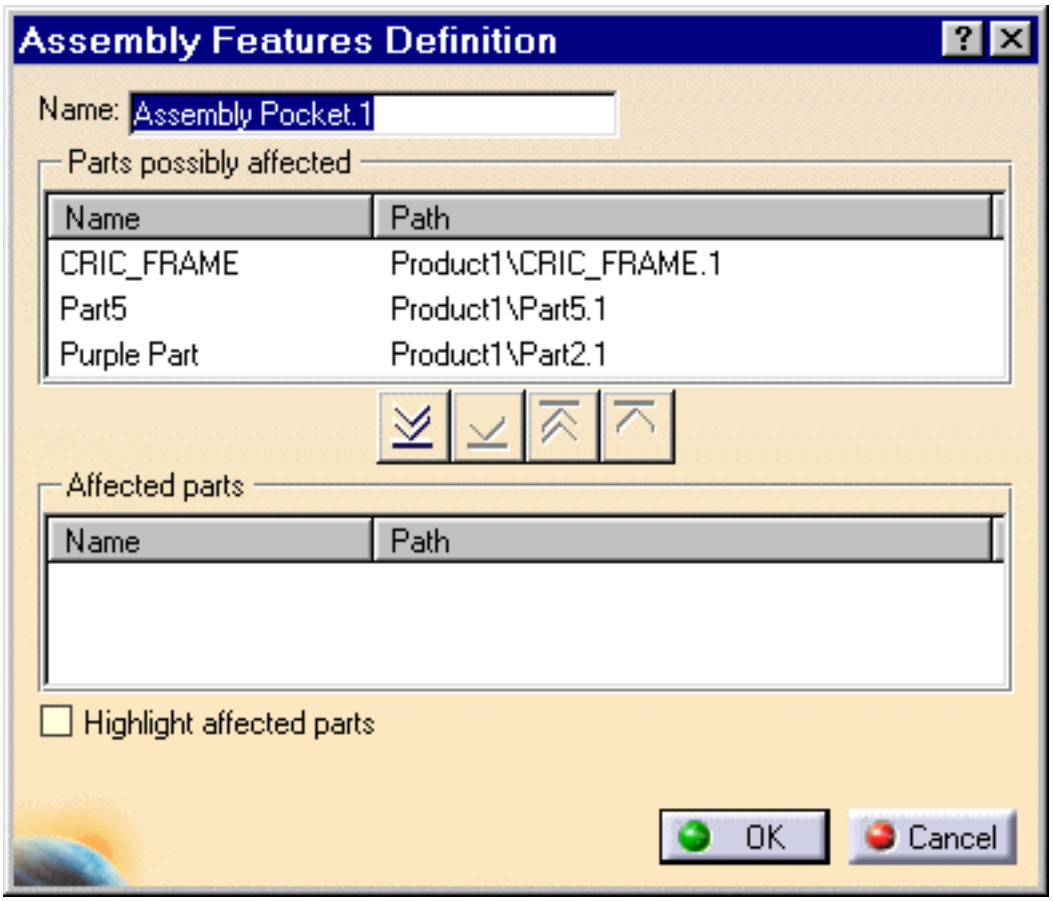

The dialog box that appears displays the names as well as the paths of the parts that may be affected by the extrusion.

The assembly feature's name appears in the **Name** field. If desired, you can edit this name.

The frame **Affected parts** is exclusively reserved for the parts you wish to use. Purple Part is displayed in this frame.

Note that the **Pocket Definition** dialog box is displayed.

3. The frame **Affected parts** is exclusively reserved for the parts you wish to use. As you wish to create a pocket between Part5 and Purple Part, move them to the list **Affected parts**. To do so, click the button. Alternatively, double-click each part.

The other three buttons lets you move the names of the parts from one list to another too:

- moves all selected parts to the list **Affected parts**.
- moves all selected parts to the list **Parts possibly affected**.
- moves the selected part to the list **Parts possibly affected**.

4. Check the option **Highlight affected parts** to clearly identify the parts.

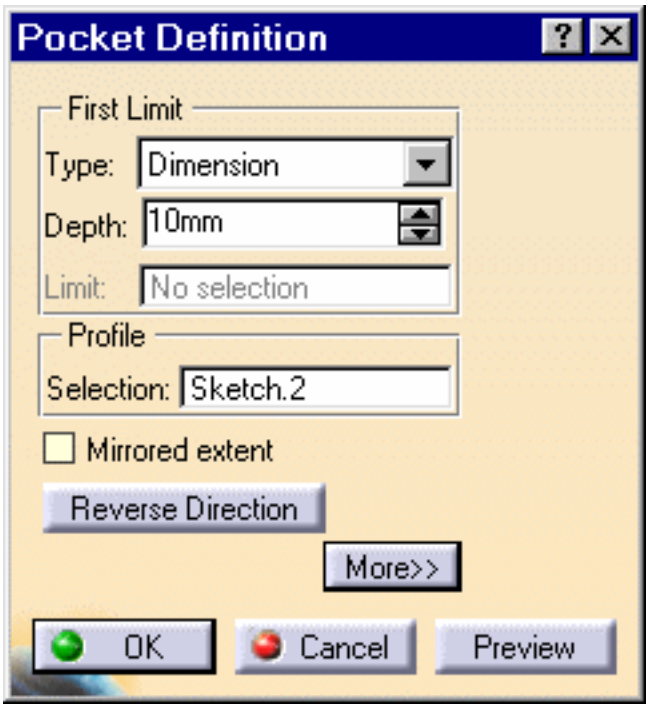

You can define a specific depth for your pocket (using the Dimension and Depth entry fields) or set one of these options to define the pocket type:

- Up to last
- Up to plane
- Up to surface

If you wish to use the **Up to plane** or **Up to surface** option, you can then define an offset between the limit plane (or surface) and the bottom of the pocket.

The other options available are:

- Mirrored extent: mirrors the extrusion using the specifications defined for Limit1.
- Reverse Direction: inverts the extrusion direction.

Additional options appear if you click the **More** button.

- You can define Limit2 as the second limit by using the same options as for Limit1 (Dimension, Up to last, up to plane, up to surface).
- You can choose between a direction normal to the sketch or define a new direction by selecting geometry.

5. For the purposes of our scenario, enter 110mm as the depth value and click OK to confirm.

For more information about pockets, please refer to **Part Design** User's Guide.

The pocket is created on both parts.

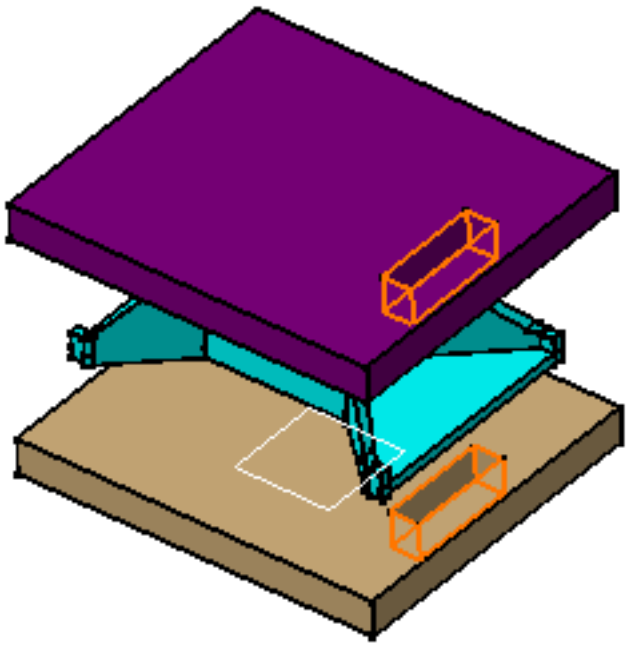

A new entity 'Assembly features' appears in the specification tree. It contains the assembly pocket referred to as 'Assembly Pocket.1" and the affected parts.

Moreover, this feature has generated a pocket in each part. An arrow symbol identifies these pockets in the tree, meaning that a link exists between Assembly Pocket.1and them.

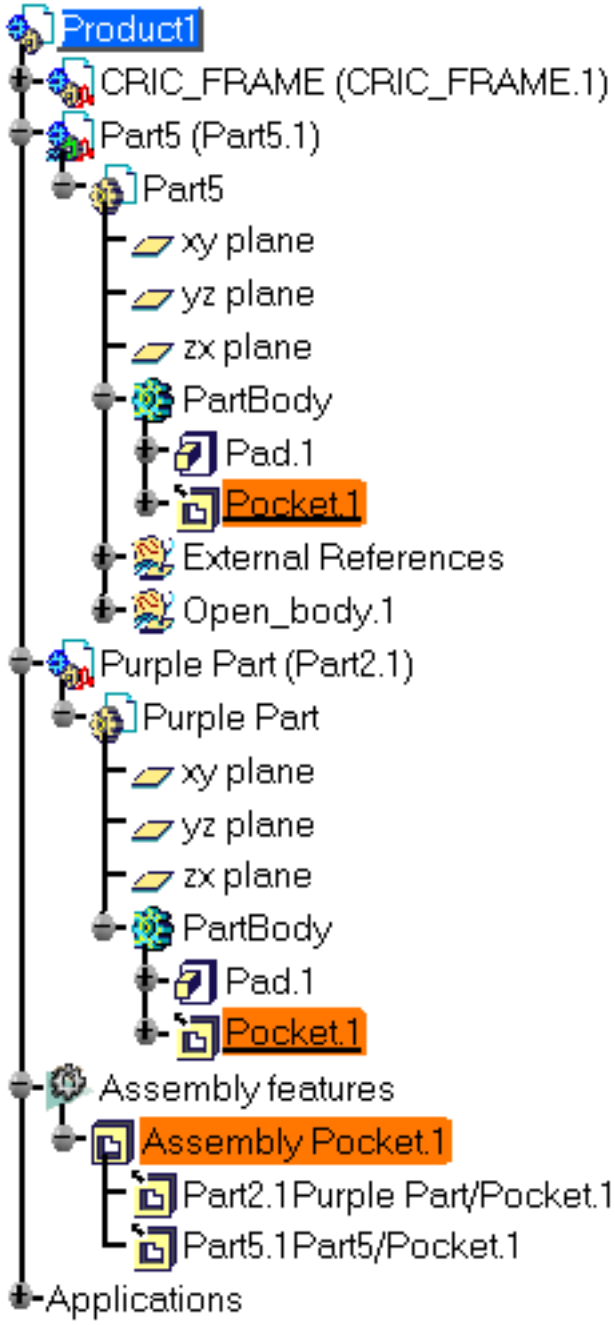

Editing an Assembly Pocket

To edit an assembly hole, double-click **Assembly Pocket.X** entity then you can either:

- modify the list of affected parts.
- edit the pocket.

If you need to cut the link between a generated pocket and Assembly Pocket.1, just use the **Isolate** contextual command. You will then obtain a 'traditional' pocket as if you had designed it in Part Design and you will be able to edit it in Part Design.

Reusing Part Design Pockets

To increase your productivity, you can create Assembly pockets from existing Part Design pockets, or more precisely by reusing the specifications you entered for designing Part Design pockets. To do so, just proceed as follows:

Before reusing Part Design pocket, note that:

- You cannot reuse a pocket with the **Up to next** option, because this option is not applicable for assembly pocket.
- You cannot re-affect an assembly pocket on the part which contains the part pocket, except if the size of the assembly pocket exceed the size of the part pocket, or if the assembly pocket location is different. In fact, you cannot dig vacuum.

1. Click the **Pocket** icon:
2. Select the Part Design pocket of interest.
3. Both the **Pocket Definition** and the **Assembly Features Definition** dialog boxes display.

   You then just need to specify the parts to extrude.

   The assembly hole inherits the specifications as displayed in the **Part Design Hole Definition** dialog box. You can edit these specifications at any time. Editing an Assembly feature created in this way does not affect the specifications used for the Part Design feature.

Reusing Assembly Design Holes

The application also lets you reuse Assembly Pockets' specifications to accelerate the design process. In this case, you just need to select the existing assembly pocket, click the Assembly pocket icon and then select a face. Only the Assembly Features Definition dialog box appears to let you determine the parts to dig.

Assembly Remove

This task shows you how to remove a body from two parts in assembly context.

Open the AssemblyRemove_Add.CATProduct document.

1. Click the **Remove** icon:

2. Select Body.1 from MoldedPart as the body to be removed.

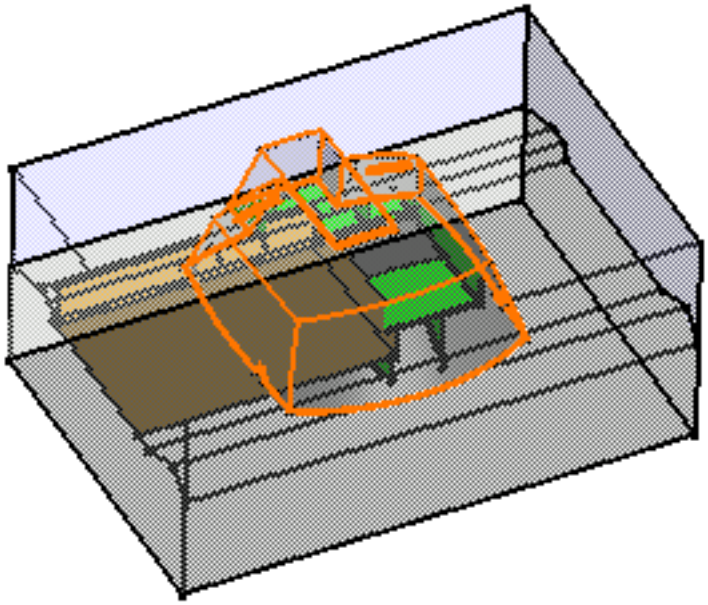

3. The dialog box that appears displays the names as well as the paths of the parts that may be affected by the removal.

   The assembly feature's name now appears in the top left corner of the dialog box. If desired, you can edit this name.

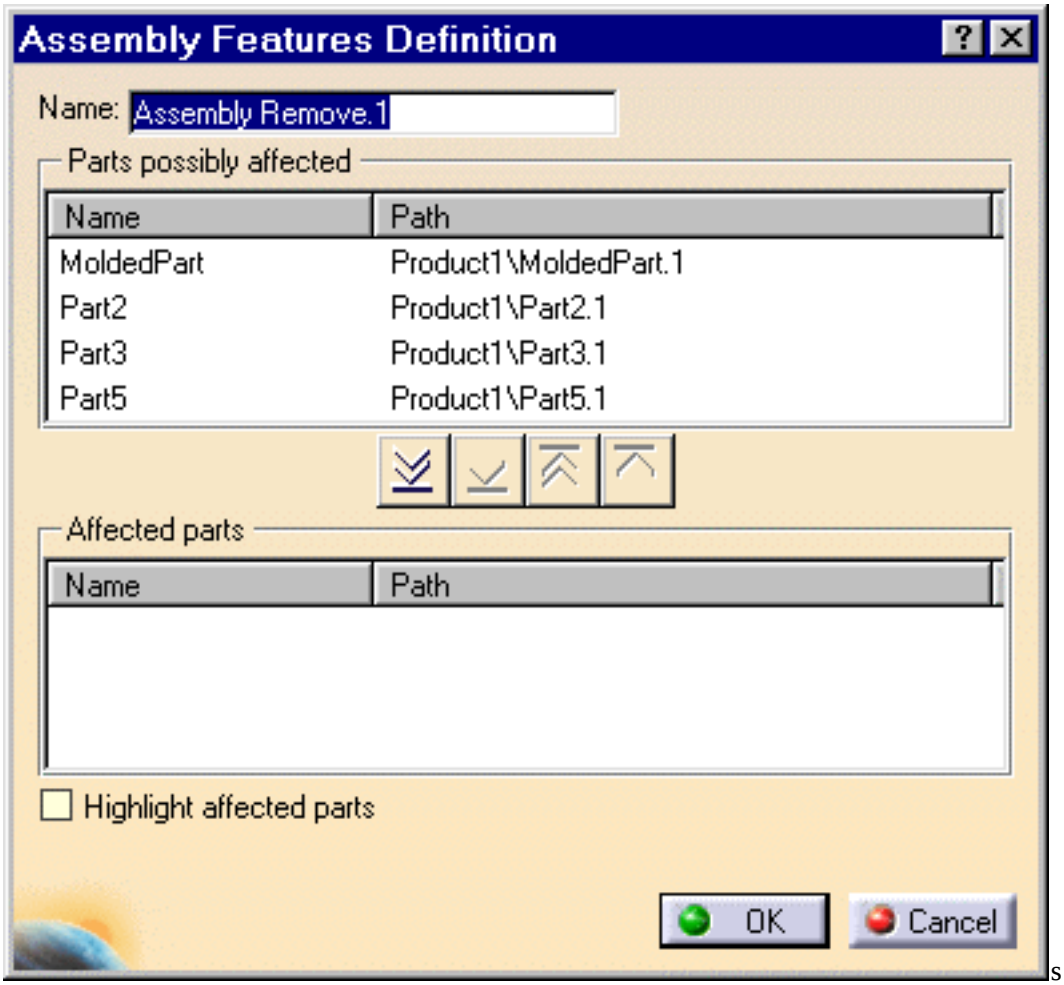

The frame 'Affected parts' is exclusively reserved for the parts you wish to use. For the purposes of our scenario, you are going to remove material from Part2 and Part3.

Move these parts to the list 'Affected parts". To do so, select Part2 and click the button. Repeat the operation for Part3. Alternatively, double-click each part.

The other three buttons lets you move the names of the parts from one list to another too:

moves all selected parts to the list 'Affected parts'

moves all selected parts to the list 'Parts possibly affected'

moves the selected part to the list 'Parts possibly affected'

The Remove dialog box that has appeared, indicates the part to be removed.

4. Check the option Highlight affected parts to clearly identify the parts affected by the operation.

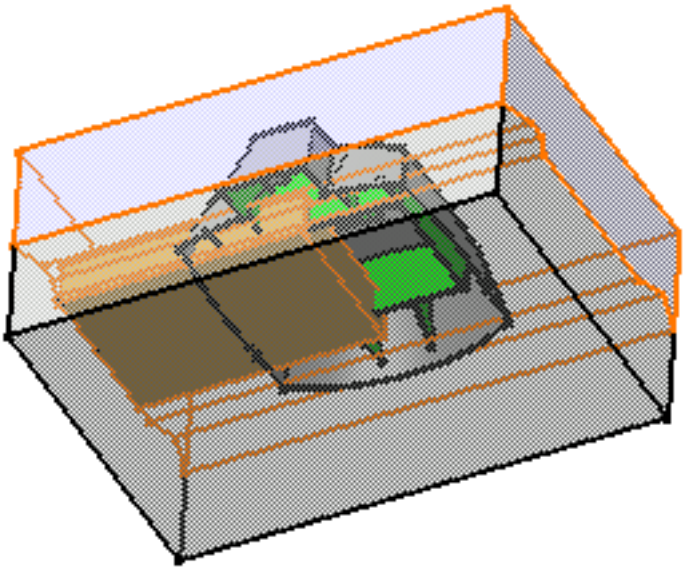

5. Click OK to confirm.

Material is removed from Part 2 and Part3.

6. To better visualize the result, put Part 5 and Body.5 in no show mode. You can see the portion of material that has been removed.

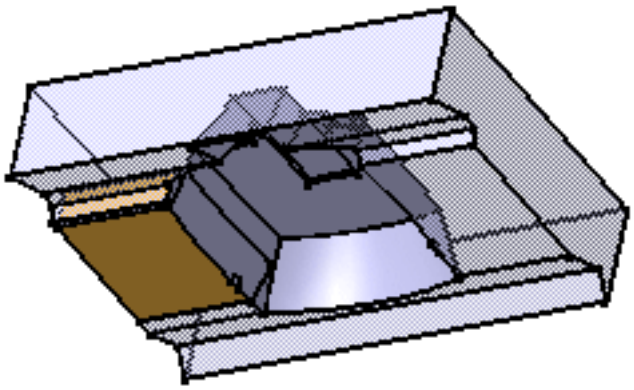

A new entity 'Assembly Features' appears in the specification tree. It contains the assembly removal referred to as 'Assembly Remove.1" and the name of affected parts.

Moreover, this feature has generated a remove feature in Part2 and a remove feature in Part 3. An arrow symbol identifies these removals in the tree, meaning that a link exists between Assembly Remove.1and them.

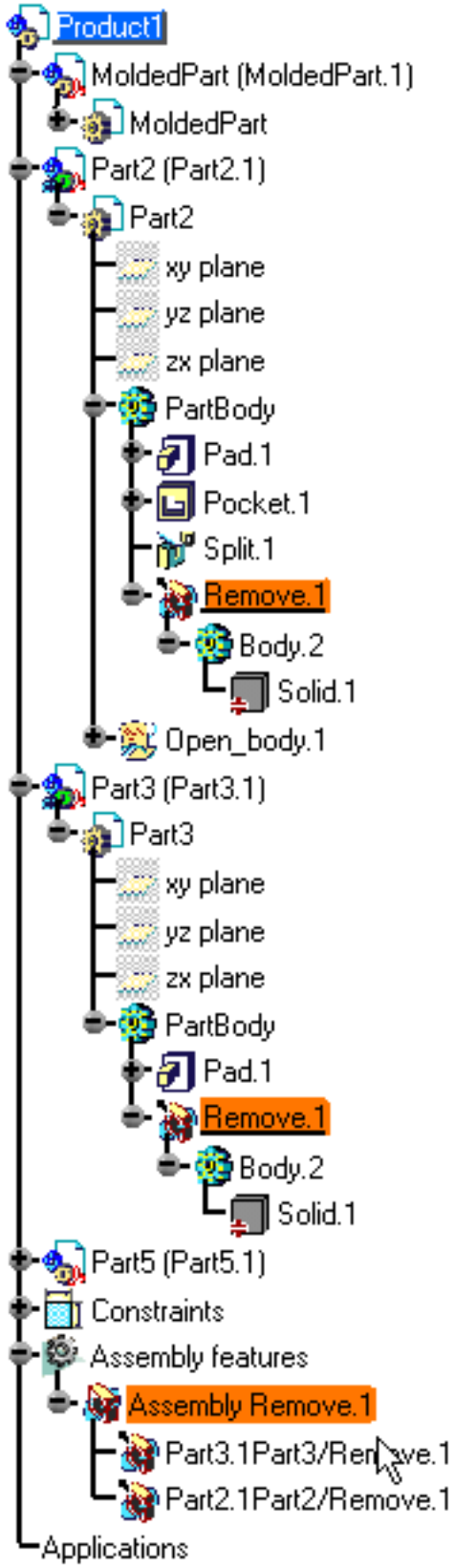

Editing an Assembly Remove

To edit an assembly remove operation, double-click 'Assembly Remove.X' entity. You can then modify the list of the parts possibly affected by the removal.

Reusing Part Design Remove Features

To increase your productivity, you can create Assembly Remove Features from existing Part Design Remove features, or more precisely by reusing the specifications you entered for designing Part Design remove features. To do so, just proceed as follows:

1. Click the **Remove** icon .
2. Select the Part Design Remove feature of interest.
3. Both the Remove Definition and the Assembly Features Definition dialog boxes display. You then just need to specify the parts of interest.

   The assembly remove feature inherits the specifications as displayed in the Part Design Remove Definition dialog box. You can edit these specifications at any time. Editing an Assembly feature created in this way does not affect the specifications used for the Part Design feature.

Reusing Assembly Design Remove Features

The application also lets you reuse Assembly Remove Features' specifications to accelerate the design process. In this case, you just need to select the existing assembly remove feature, click the Assembly remove icon and then select a face. Only the Assembly Features Definition dialog box appears to let you determine the parts of interest.

Assembly Add

This task shows you how to add several parts belonging to a same product.

Open the AssemblyRemove_Add.CATProduct document, perform the Asssembly Remove as explained in the documentation and put Part5 and Body.5 in show mode.

1. Click the **Add** icon:
2. Select Body.5 as the body to be added.

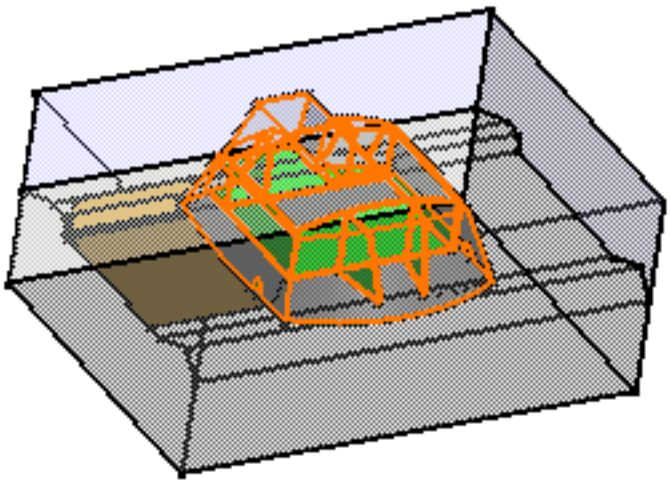

The dialog box that appears displays the names as well as the paths of the parts that may be affected by the add operation.

The assembly feature's name now appears in the top left corner of the dialog box. If desired, you can edit this name.

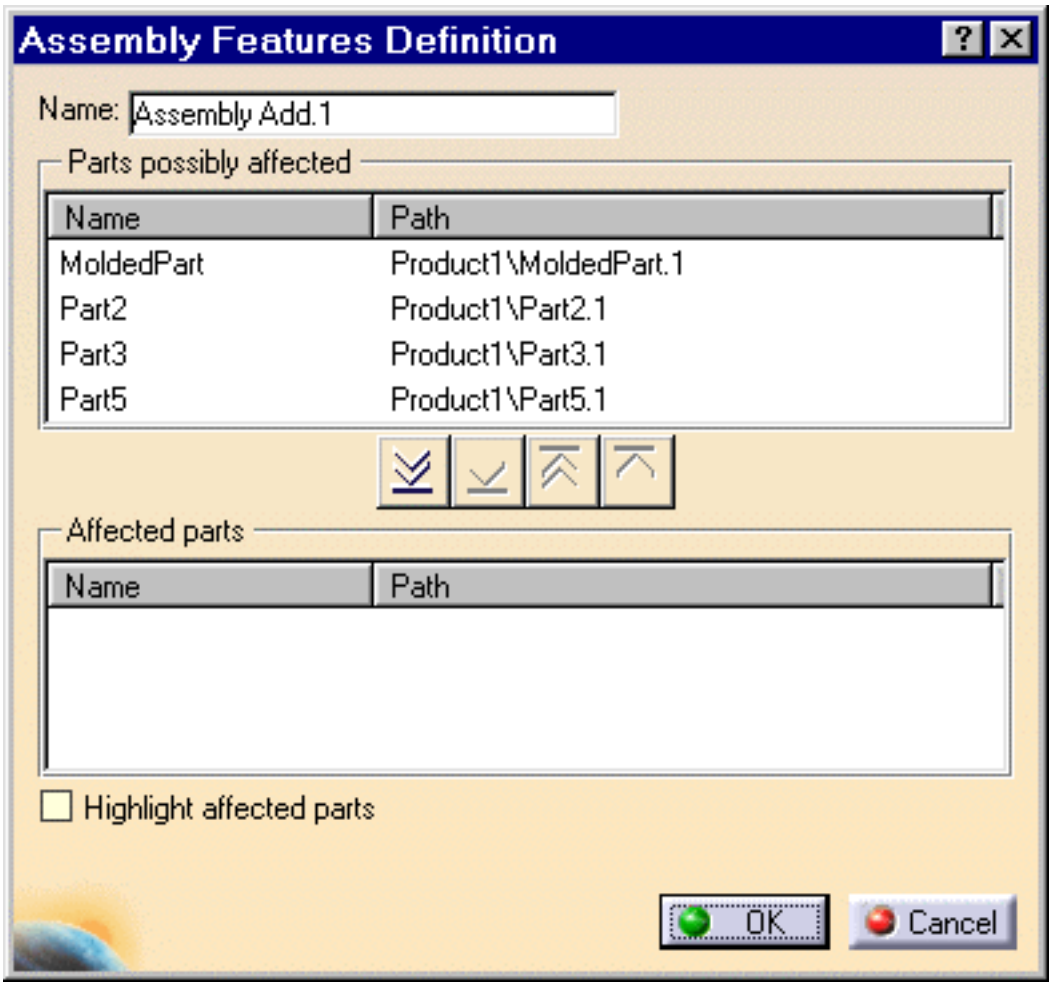

3. The frame 'Affected parts' is exclusively reserved for the parts you wish to use. For the purposes of our scenario, you are going to add Body.5 to Part5.

Move Part5 to the list 'Affected parts". To do so, select Part5 and click the button.

The other three buttons lets you move the names of the parts from one list to another too:

moves all selected parts to the list 'Affected parts'

moves all selected parts to the list 'Parts possibly affected'

moves the selected part to the list 'Parts possibly affected'

The Add dialog box that has appeared, indicates the part to be added.

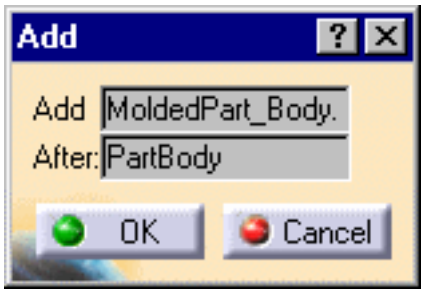

4. Check the option Highlight Impacted Parts to clearly identify the parts affected by the operation.

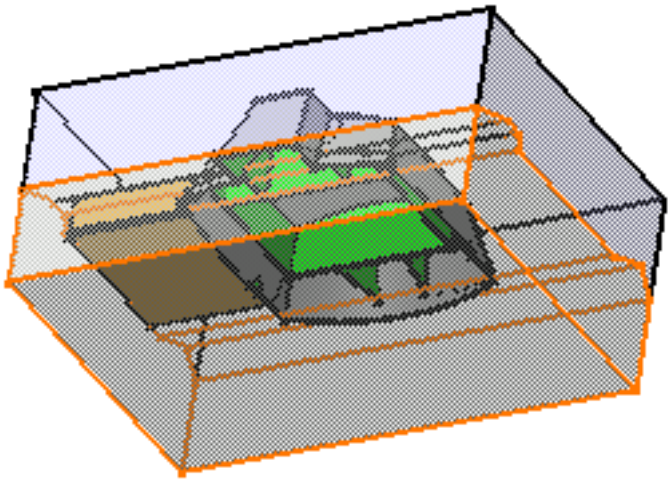

5. Click OK to confirm.

6. To better visualize the result, put Part2 and Part3 in no show mode. You can see the portion of material that has been removed.

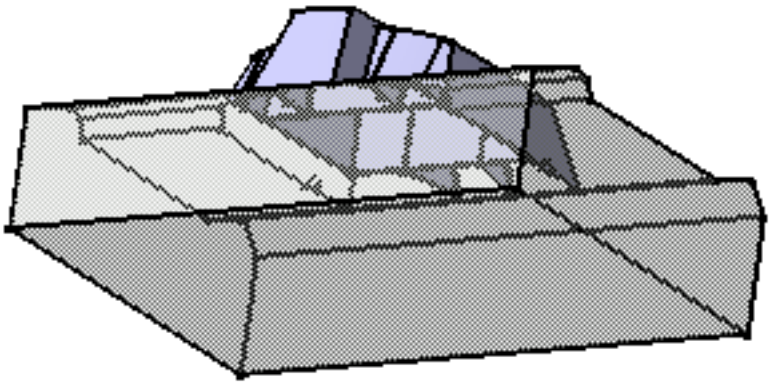

A new entity 'Assembly Features' appears in the specification tree. It contains the assembly removal referred to as 'Assembly Add.1" and the name of affected parts.

Moreover, this feature has generated a remove feature in Part5. An arrow symbol identifies this addition in the tree, meaning that a link exists between Assembly Add.1and this remove feature.

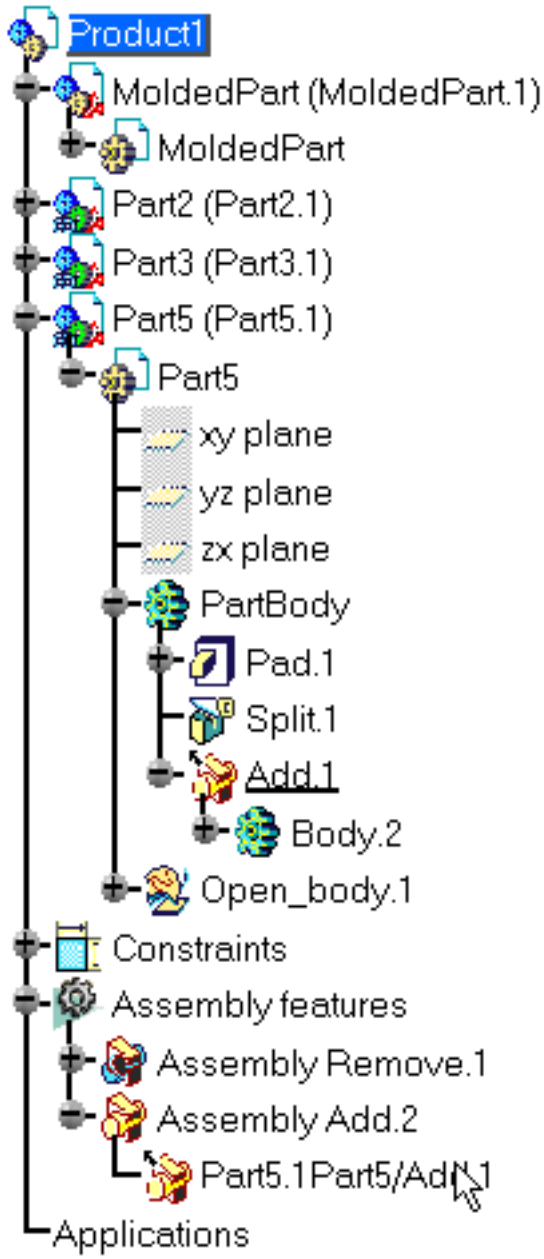

Editing an Assembly Add

To edit an assembly add operation, double-click 'Assembly Add.X' entity. You can then modify the list of the parts possibly affected by the addition.

Reusing Part Design Add Features

To increase your productivity, you can create Assembly Add Features from existing Part Design Add features, or more precisely by reusing the specifications you entered for designing Part Design Add features. To do so, just proceed as follows:

1. Click the **Add** icon .

2. Select the Part Design add feature of interest.

3. Both the Add Definition and the Assembly Features Definition dialog boxes display. You then just need to specify the parts of interest.

   The assembly add feature inherits the specifications as displayed in the Part Design add Definition dialog box. You can edit these specifications at any time. Editing an Assembly feature created in this way does not affect the specifications used for the Part Design feature.

Reusing Assembly Design Add Features

The application also lets you reuse Assembly Add Features' specifications to accelerate the design process. In this case, you just need to select the existing assembly add feature, click the Assembly add icon and then select a face. Only the Assembly Features Definition dialog box appears to let you determine the parts of interest.

Assembly Symmetry

Performing a Symmetry: click this icon, select the reference plane and the component, then check required options.

Modifying a Symmetry

Rotating a Component by Using the Symmetry Command

Performing a Symmetry on a Component

This task teaches you how to obtain new parts, products or instances by means of symmetry operations.

The **Symmetry** command also lets you obtain new instances by translation as explained at the end of the scenario.

In this section, you will find the following information:

- Scenario
- Components Chosen for Duplication
- More About the Mirror, New component Option
- Translation
- Keep Link Options
- Part Including Surfacic Elements
- New Components or New Instances?

If you do not have a Part Design license (PD1 or GSD), the options **Keep link in position** and **Keep link with geometry** will be grayed out in the Assembly Wizard dialog box.

If you do not have an Assembly Design license (ASD), Assembly features do not appear in the Specification Tree.

Open the Symmetry1.CATProduct document.

1. Click the **Symmetry** icon .

   The **Assembly Symmetry Wizard** dialog box displays, prompting you to select the reference plane.

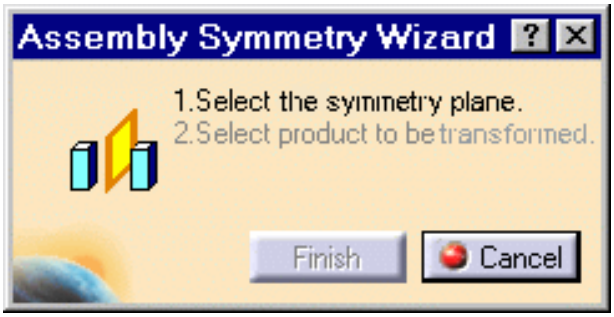

2. Select the element used as the reference of the symmetry. This element can be a plane or any planar face that the system recognizes as a plane. Select **Plane.1**.

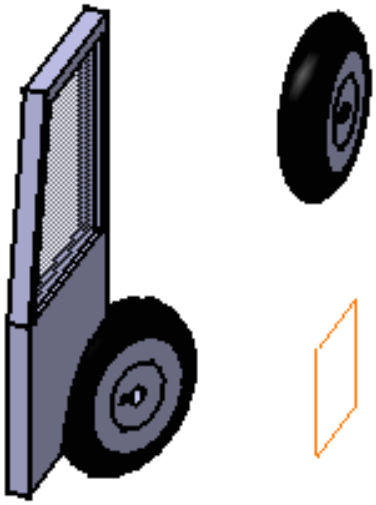

Components chosen for duplication

The component you select for duplication must be the child of the active product.

Example 1: the element to duplicate is not a symmetrical element

In this case, the symmetrical element will be a new component

3. Select **NewDoor (NewDoor.1)** as the product to be duplicated.

NewDoor (NewDoor.1) is highlighted and the symmetry is previewed.

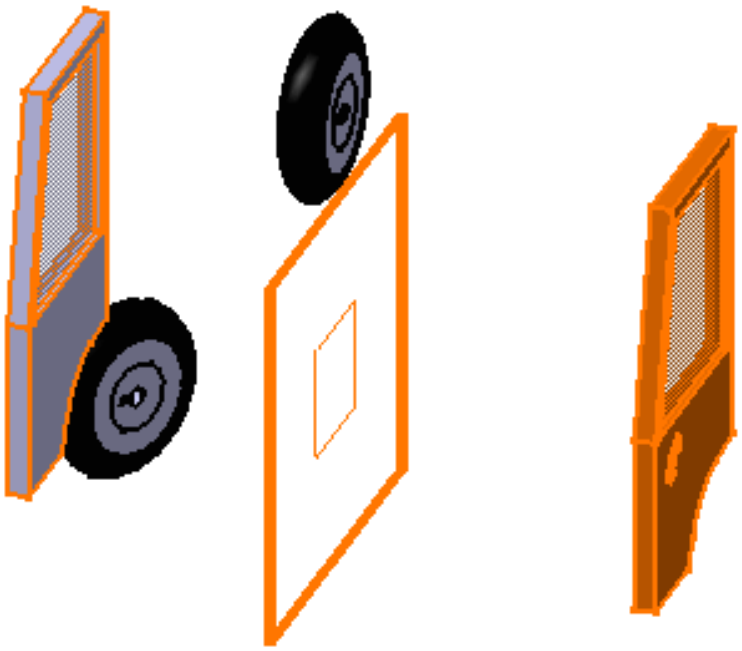

The **Assembly Symmetry Wizard** dialog box appears. It displays the list of all elements that will be duplicated, that is all components composing **NewDoor product: Door.1** and **Pane.1**.

The three icons to the left of the window represent symmetries as well as the creation of new components.

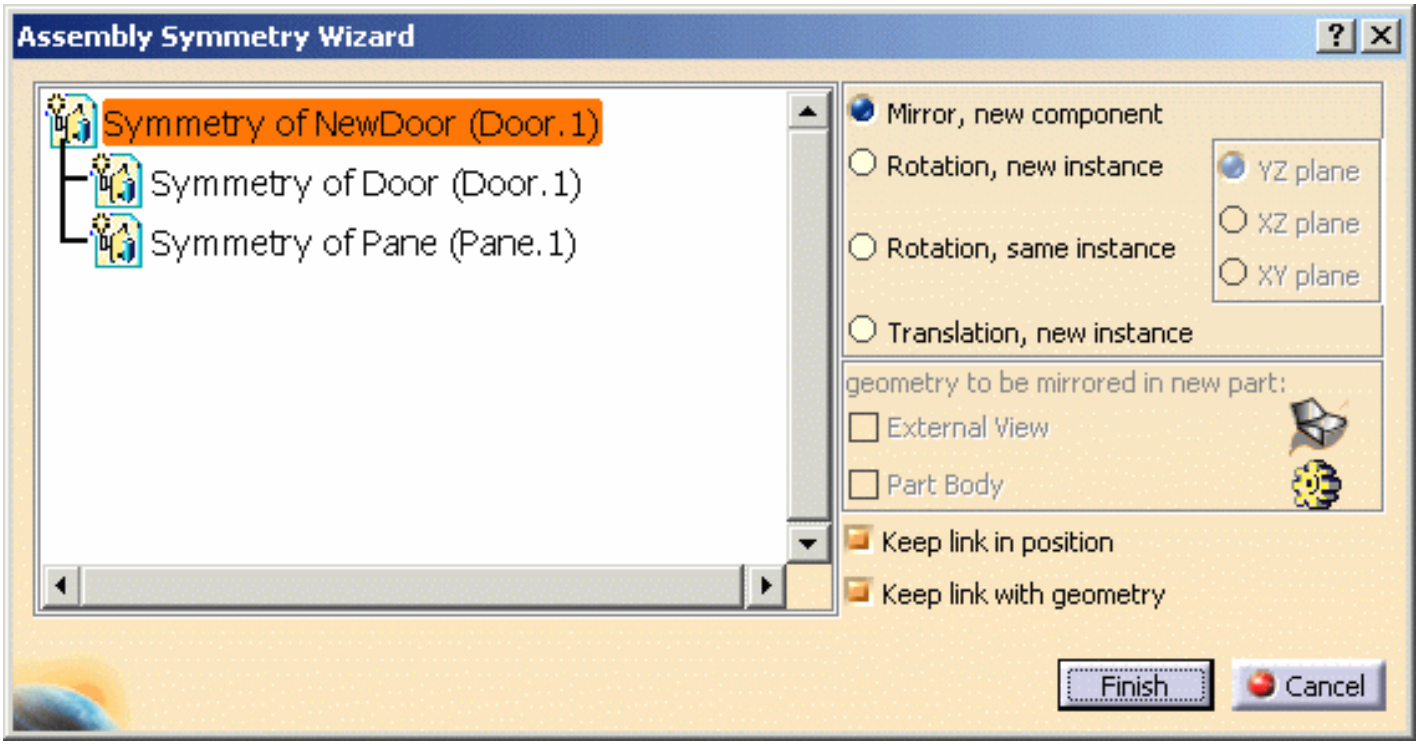

The **Rotation, same instance option** moves the selected geometry symmetrically in relation to a plane. It does not create any new geometry. In short, the Bill of Material is not affected by the resulting geometry. For an example, please refer to Rotating a Component by Using the Symmetry Command.

Notes

- If you wish to preview the symmetry of the door only, select **Symmetry of Door (Door.1)**. Likewise, if you prefer to preview the symmetry of the pane, simply select **Symmetry of Pane (Pane.1).**
- Instead of new components, you can also create new instances for **Symmetry of Door (Door.1)** or **Symmetry of Pane (Pane.1)**. To do so, select them and check the option "Rotation (new instance)". For more about this option, refer to Example 2.
- If the product to duplicate includes a part composed of several bodies, only the part body of this part is taken into account by the **Symmetry** command.

4. Click **Finish** to confirm the operation.

A window appears, displaying results:

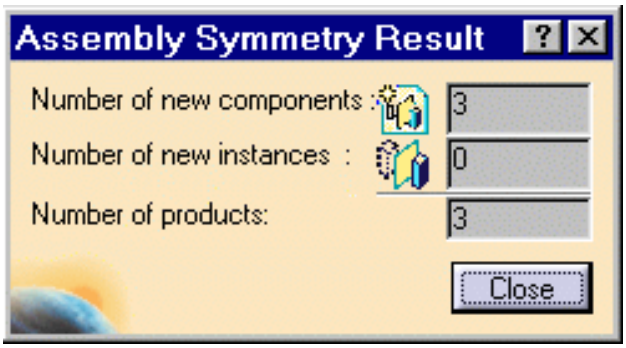

5. Click **Close**. You obtain a second door:

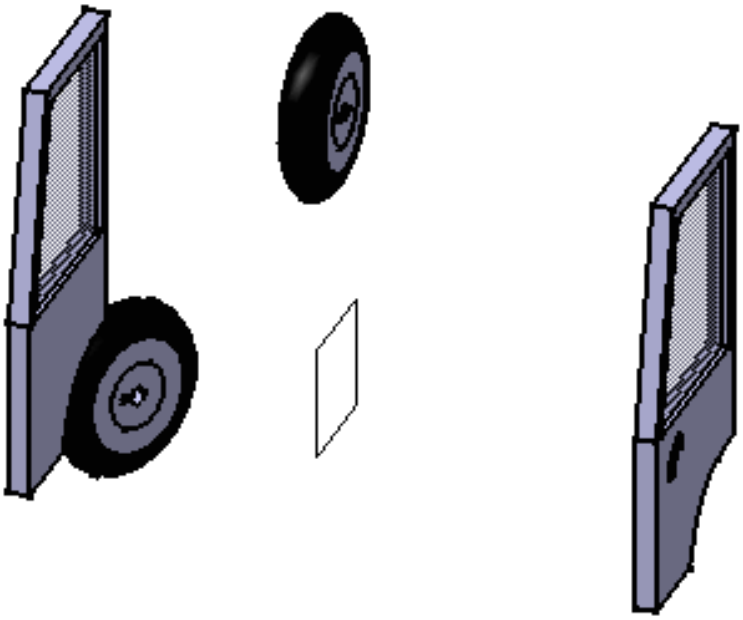

The new component **Symmetry of NewDoor (Symmetry of Door.1)** is displayed as well as the parts it contains (**Symmetry of Door and Symmetry of Pane**).

A new entity **Assembly features** also appears in the specification tree. It contains the symmetry referred to as **Assembly Symmetry.1** which in turn contains the symmetry plane and the affected component.

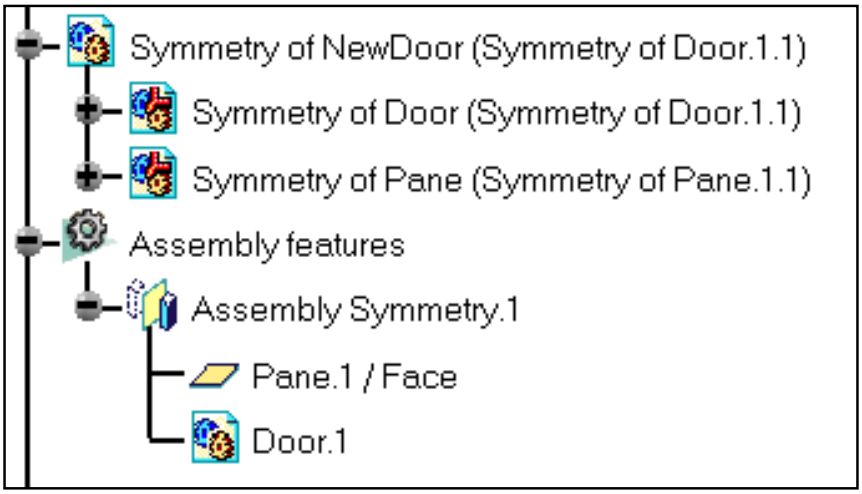

More About the Mirror, New component option

Once you have created a symmetrical component using the **Mirror, New component option**, you cannot apply the **Symmetry** command with the **Mirror, New component** option to:

- Any instance of the initial component (even if the reference plane is distinct).
- The component obtained by symmetry.

Example 2: the element to duplicate is a symmetrical element itself

In this case, the symmetrical element will be a new instance.

6. Click the **Symmetry** icon .

   The **Assembly Symmetry Wizard** dialog box displays.

7. Select the element used as the reference of the symmetry: select **Plane.1**.

8. Select **Wheel (Wheel.2)**.

The wheel is highlighted and the symmetry is previewed.

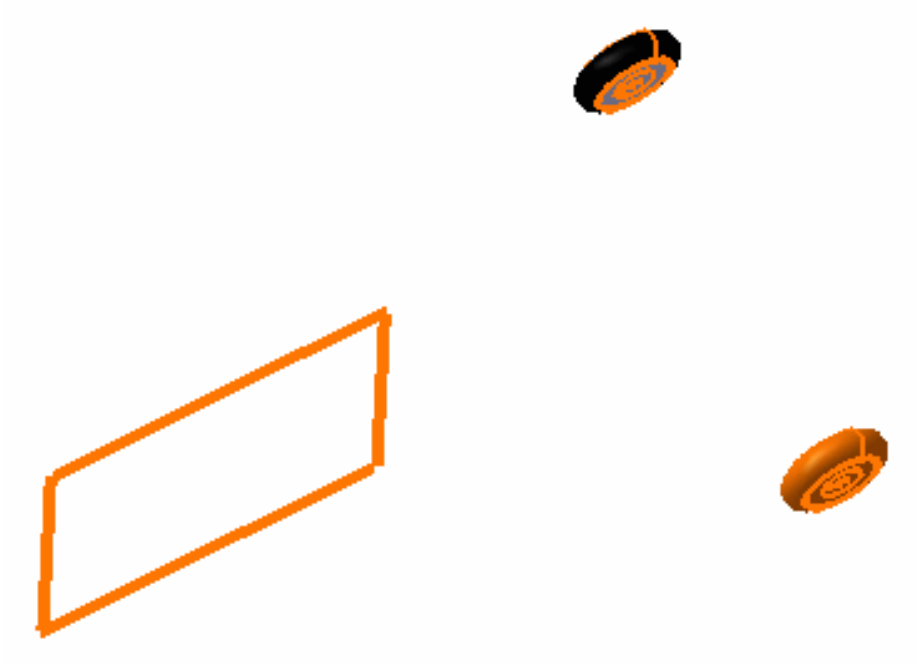

The **Assembly Symmetry Wizard** dialog box appears. It displays the list of all elements that will be duplicated: all components composing **Wheel Assembly** product.

9. Select **Symmetry of jantes** from the list. Only the symmetry of that component is now previewed in the geometry area.

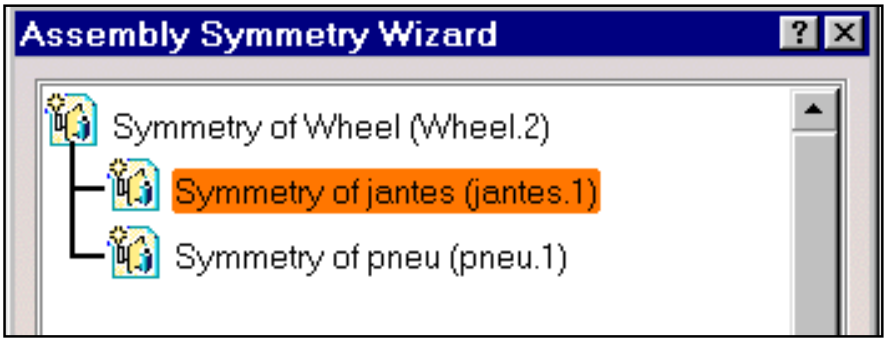

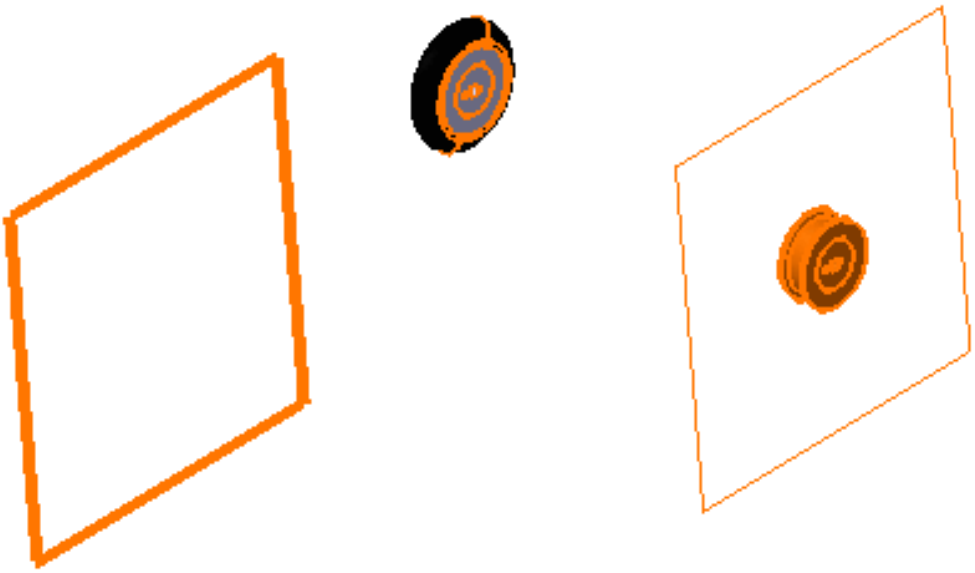

10. Check the **Rotation, new instance** option.

    A new icon reflects this change in the list.

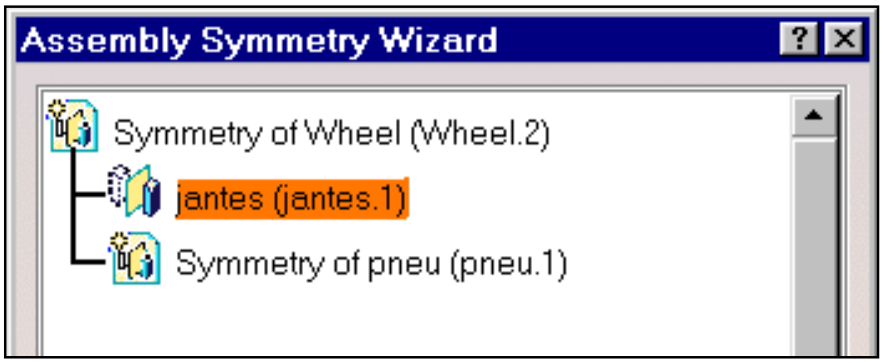

11. The object is positioned with respect to **Plane.1**. Now, as it is intrinsically symmetrical, you need to define which of its three reference planes must be symmetrical with respect to **Plane.1**. For example, check **XZ plane** option.

    It is moved accordingly.

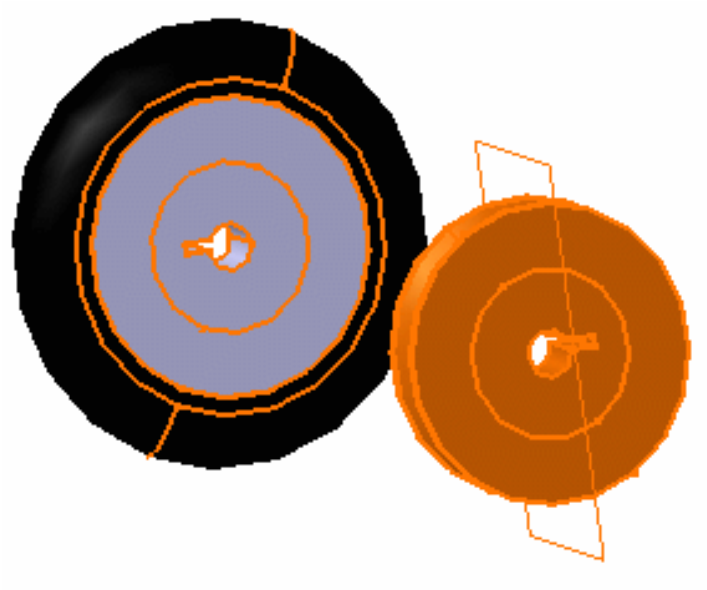

12. Check **XY plane** option.

    It is re-positioned.

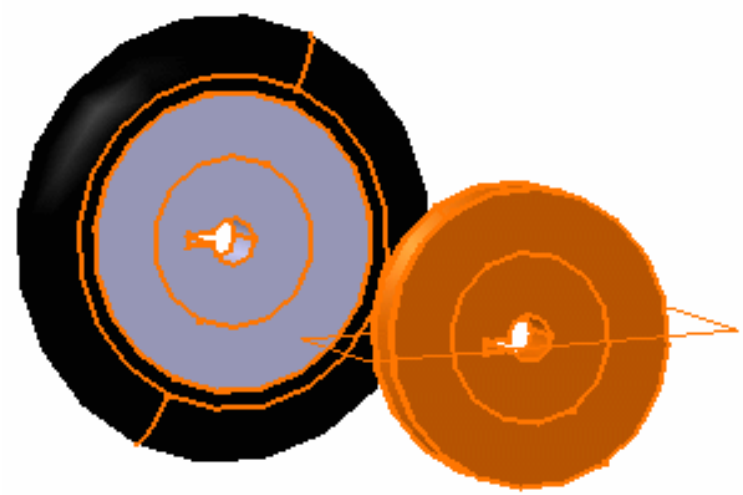

13. Eventually, the first option is the right one. Check **YZ plane**. The symmetry is performed.

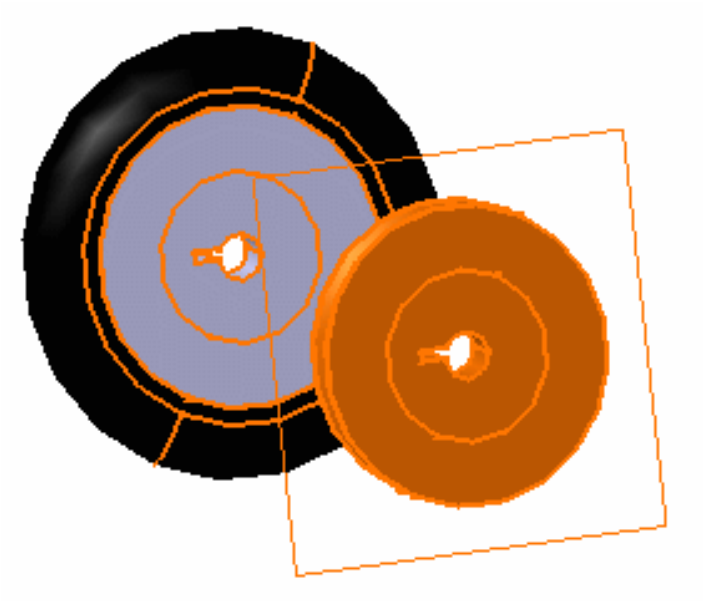

14. Click **Finish** to confirm the operation.

A window appears, displaying results. Two new components and one instance have been created.

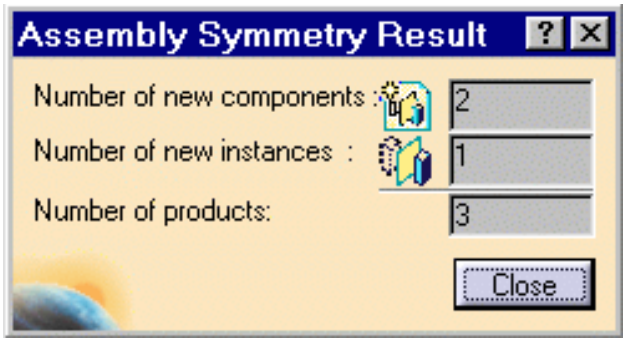

15. Click **Close**.

The new component **Symmetry of Wheel (Symmetry of Wheel.2.1)** is displayed in the specification tree. It contains one new instance (**jantes (symmetry of jantes.1.1**) and one new component (**Symmetry of pneu (Symmetry of pneu.1.1**).

The **Assembly features** entity contains the new symmetry referred to as **Assembly Symmetry.2** which in turn contains the symmetry plane and the affected component.

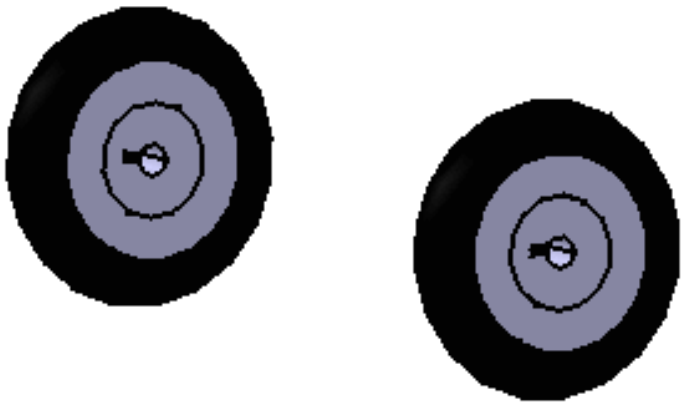

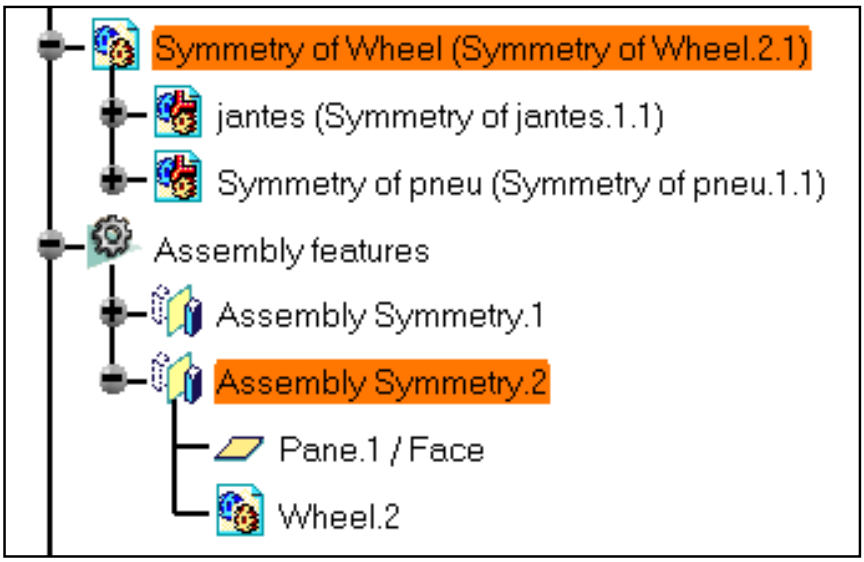

Translation

16. Click the **Symmetry** icon .

The **Assembly Symmetry Wizard** dialog box displays.

17. Select **Plane.1** as the reference to compute the translation.

18. Select the **Wheel (Wheel.1)** as the component to be translated.

19. Check the **Translation, new instance** option.

A new icon reflects this change.

To calculate the translation, the application projects the center of the axis system onto the plane you selected. The distance between the center and the plane is repeated twice.

20. Click **Finish** to confirm the operation.

A window appears, displaying results:

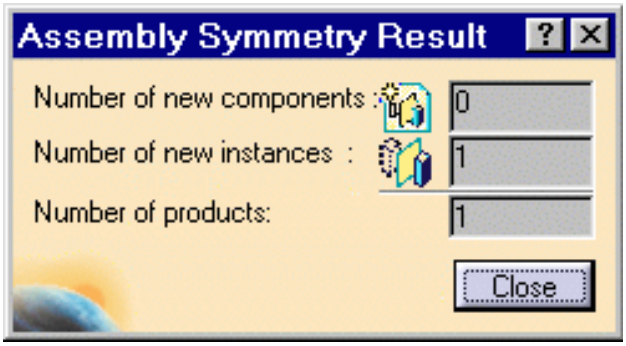

21. Click **Close**. The wheel is translated:

Keep Link Options

- The **Keep link in position** option guarantees associativity with the initial part or product: if you edit their positions, symmetrical elements inherit these modifications and are therefore repositioned accordingly.

- The **Keep link with geometry** option guarantees associativity with the geometry of the initial part: if you edit its shape, symmetrical elements inherit these modifications. However this type of associativity is restricted to elements made visible via the External View... command or to Part Bodies. For more information, refer to *Generative Shape Design User's Guide* and *Part Design User's Guide* respectively.

Parts Including Surfacic Elements

If you need to perform a symmetry on a part including surfacic elements, the application creates the corresponding symmetry provided that an external view of these elements has been previously specified.

Conversely, if these elements have not been specified as such, the symmetry cannot be performed.

For more about the **External View** command, please refer to the *Generative Shape Design User's Guide*.

In the **Assembly Symmetry Wizard** dialog box, the **External View** or **Part Body** options inform you about the result you will obtain. For example, if the **Part Body** option is checked, the **Symmetry** command will affect the Part Body, not surfacic elements.

New Components or New Instances?

If you compare the symmetry obtained by using the **Mirror, new component** option...

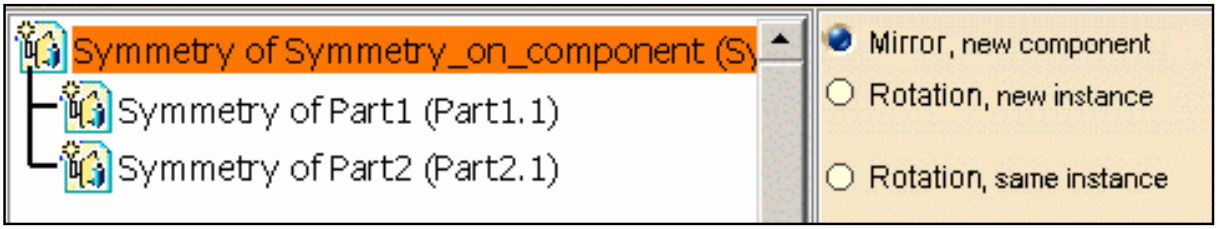

... to the symmetry obtained first using the **Mirror, new component option**, then the **Rotation, new instance** option, then reusing **Mirror, new component**, both results are different as indicated by the icons:

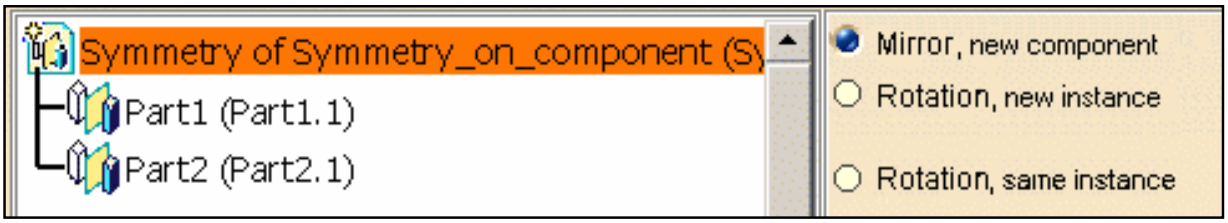

The behavior is the following: after changing the symmetry type, that is **Rotation, new instance**, to reuse the **Mirror, new component** option, the children of the product to be mirrored remain as new instances whereas the product is assigned the **new component** definition.

What you need to do

To make sure that you obtain the same results for both operations, you need to use the **Mirror, new component, all children** contextual command available in the dialog box instead of checking **Mirror, new component**.

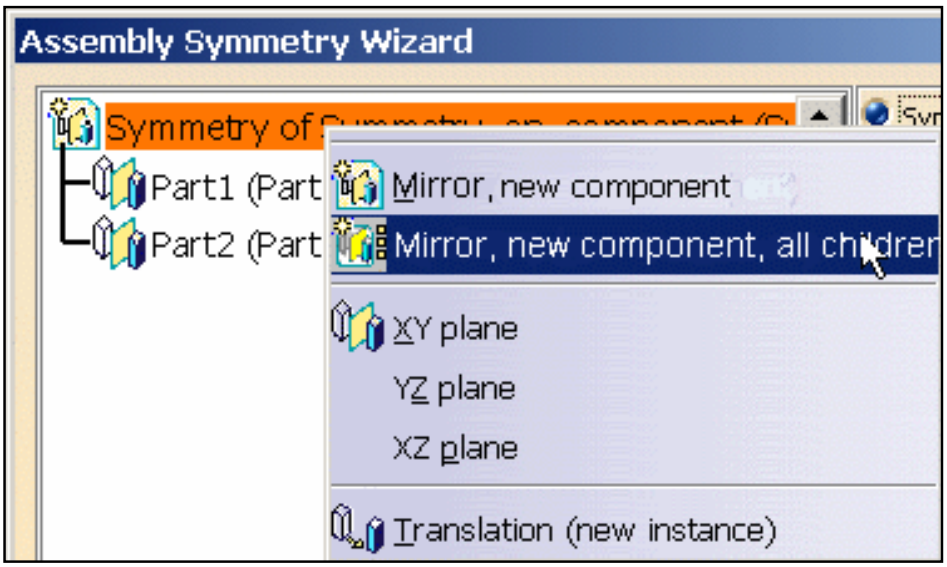

Result:

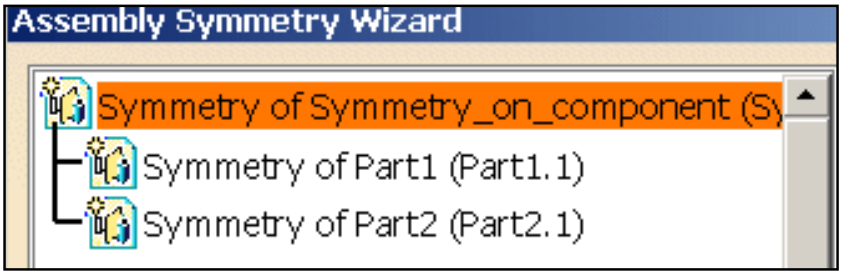

For more information about the **Symmetry** command, refer to Modifying a Symmetry.

Modifying a Symmetry

This task shows you how to edit a symmetry and what happens when you replace or delete the original component.

Open the Symmetry1.CATProduct document and perform the steps from 1 to 5 of the scenario described in Performing a Symmetry.

This scenario assumes that the automatic update mode is on.

1. Double-click Assembly Symmetry.1 in the specification tree.

   The Assembly Symmetry Wizard displays. Two new fields are available at the top right corner of the dialog box.

2. Enter a new name in the Name field. For example, "New Symmetry".

3. Click the arrow to change the symmetry plane.

   The <None> term appears in the field.

4. Select, for example a door's face as the new symmetry plane.

   The field now contains "Door.1/Face".

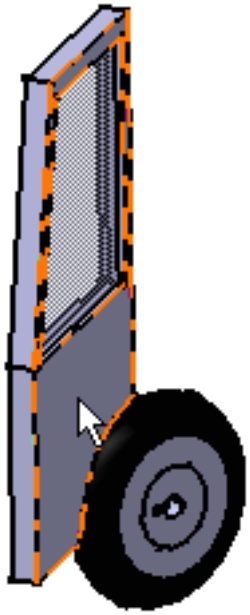

5. Click Finish to confirm and close the dialog box.

   Once updated, the symmetry looks like this:

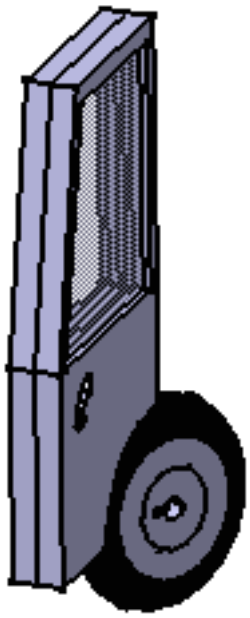

Replacing the initial component

6. Select Door (Door.1) and use the **Components -> Replace Component...** contextual command.

7. From the **cfyug/samples** directory select Door.2.CATPart as the replacing component.

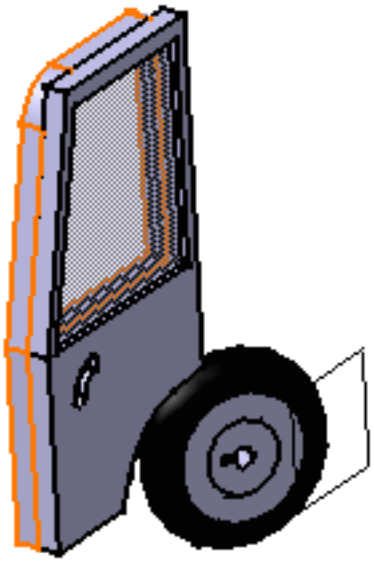

   The symmetry is no longer valid. You need to be redefine it as indicated in the specification tree.

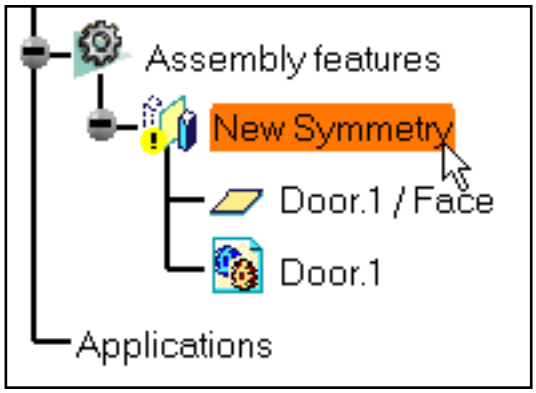

8. Double-click New Symmetry.

   The Assembly Symmetry Wizard dialog box displays.

9. Select Door.2 (Door.1) and check the option "Mirror, new component".

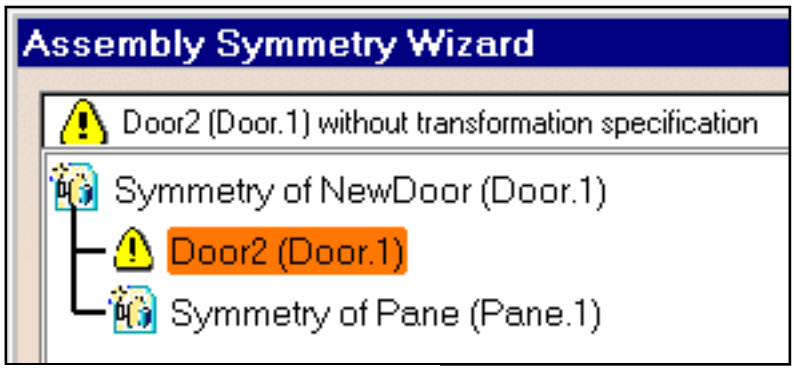

10. Click Finish to confirm.

The new door is obtained by symmetry.

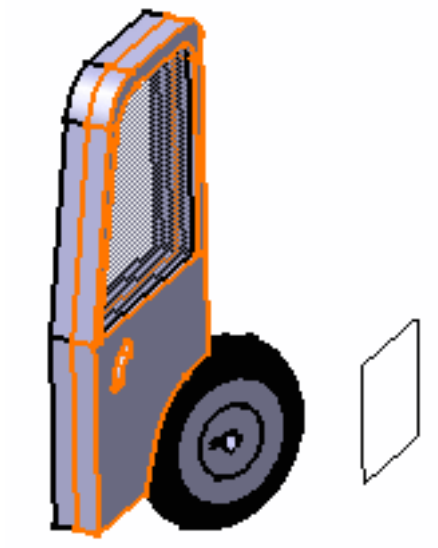

Deleting the original component

11. Delete Pane (Pane.1).

Its symmetrical element is deleted too.

The assembly and the specification tree now look like this:

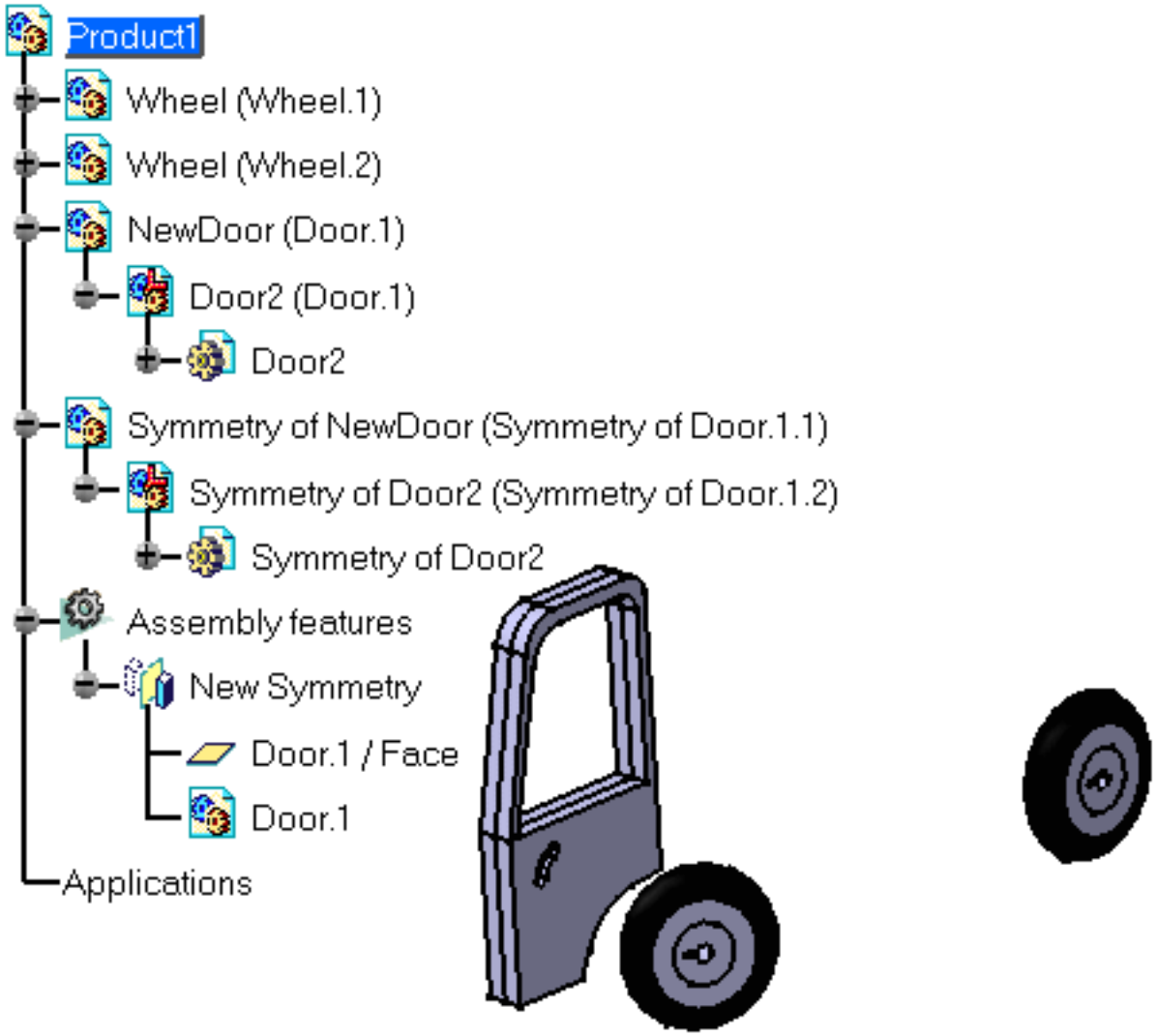
Product1
Wheel (Wheel.1)
Wheel (Wheel.2)
NewDoor (Door.1)
Door2 (Door.1)
Door2
Symmetry of NewDoor (Symmetry of Door.1.1)
Symmetry of Door2 (Symmetry of Door.1.2)
Symmetry of Door2
Assembly features
New Symmetry
Door.1 / Face
Door.1
Applications

Rotating a Component by Using the Symmetry Command

This task shows you how to rotate a component by using the new option "Rotation, same instance".

Notes
this command is the only one you will use to save transformations within the Enovia database.
The positioning matrix will be saved in the Enovia database.

Open the Symmetry2.CATProduct document.

This scenario assumes that the automatic update mode is on.

1. Click the **Symmetry** icon to move LeftDoor.

   The Assembly Symmetry Wizard dialog box displays, prompting you to select the mirror plane.

2. Select the element used as the reference of the symmetry: select Plane.1. This plane is used to position the assembly.

   Note that the local axes of the two products are superimposed, in our example, to make sure that the final products will be in front of each other.

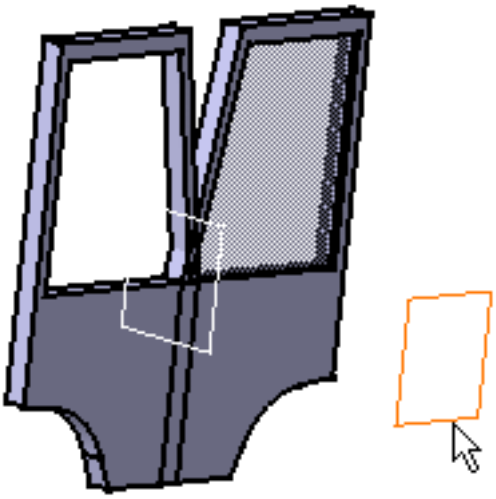

3. Select LeftDoor (LeftDoor.1) as the component to be moved.

   LeftDoor (LeftDoor.1) is highlighted and the symmetry is previewed.

4. Check the option "Rotation, same instance" and "XZ plane". This plane is specific to LeftDoor and is used to define the axis for the rotation.

   The axis is the intersection between this plane and the first plane you selected (see step1).

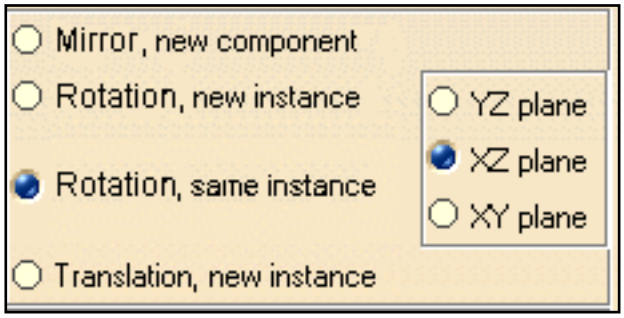

When using the "Rotation, same instance" option, the associativity options "Keep link in position " and "Keep link with geometry" are not available. For more information, see Performing a Symmetry.

5. Click Finish to confirm the operation.

   The Assembly Symmetry Result window appears, indicating that no component, nor any instance have been created.
6. Click Close. LeftDoor (LeftDoor.1) has been moved in relation to the selected plane. No geometry has been created so that the bill of material remains unchanged.

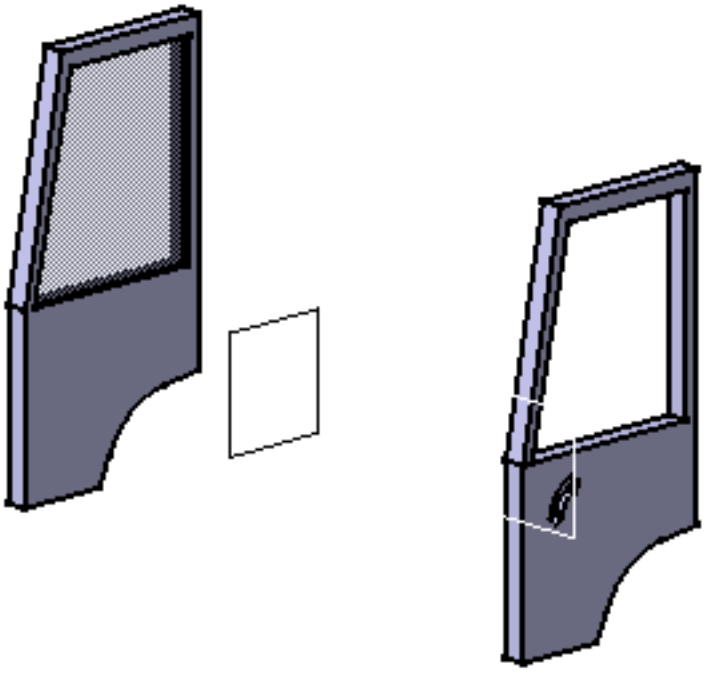

Flexible Sub-Assemblies

In the product structure from earlier versions you could only move rigid components in the parent assembly. Now, in addition to this behavior, you can **dissociate the mechanical structure of an assembly from the product structure**, and this within the same CATProduct document. As a consequence, you can move the components of a sub-assembly in the parent assembly.

In a first time, this task recalls the behavior of rigid assemblies, then illustrates how to make sub-assemblies flexible and how constraints defined in the reference document affect them. Eventually you learn how to analyze the mechanical definition of an assembly whenever this assembly includes flexible sub-assemblies (and components attached together, see Fixing Components Together).

- When a sub-assembly is flexible, you can apply updates to it, move it when constrained and set constraints to it.
- What you need to keep in mind is that rigid sub-assemblies are always synchronous with the original product, whatever mechanical modification you perform.
  Flexible sub-assemblies can be moved individually, without considering the position in the original product.
  Since Release 7, you can edit the constraints defined for flexible sub-assemblies. The changes made to these constraints do not affect the constraints defined for the original product contained in the reference document.
- You can edit the following attributes:
  - values
  - orientation
  - driving/driven properties
- Set of constraints in a rigid sub-assembly will be removed when you make it flexible.

Open the Articulation.CATProduct and chain.CATProduct documents.
The product **Articulation** includes one CATProduct and two CATPart documents as follows:

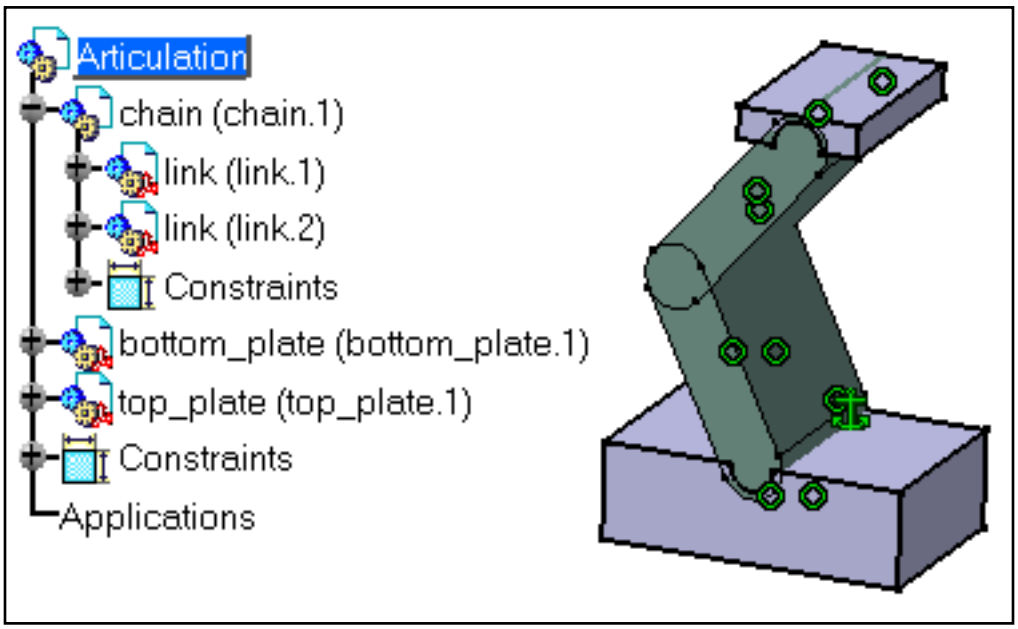

1. Drag and drop the compass onto link (link.1), then select link (link.1) and drag it. The whole chain -and not link.1 only- is moved.

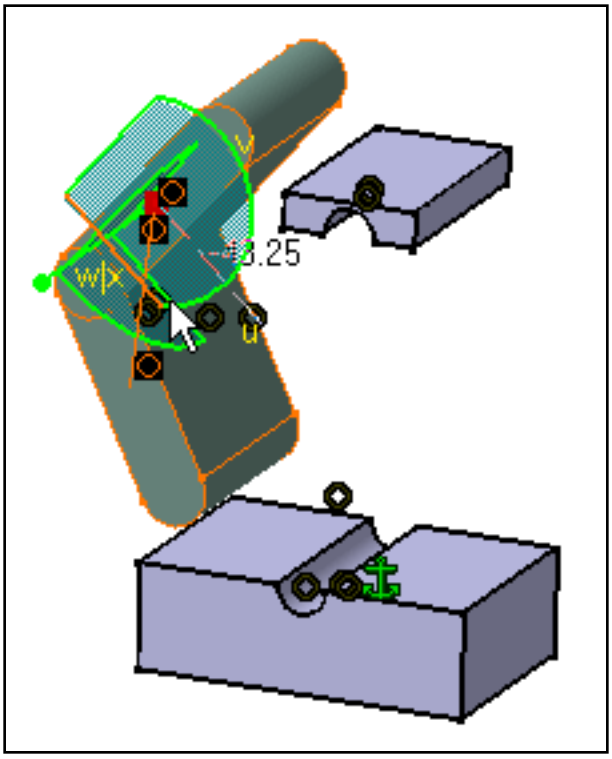

2. Undo this action to return to the initial state.

3. To make chain (chain.1) flexible, right-click it and select the **chain.1 object -> Flexible/Rigid Sub-Assembly** contextual command.

   Alternatively, click the **Flexible Sub-Assembly** icon .

   You can notice that the little wheel to the left corner of the chain icon has turned purple. This identifies a flexible sub-assembly.

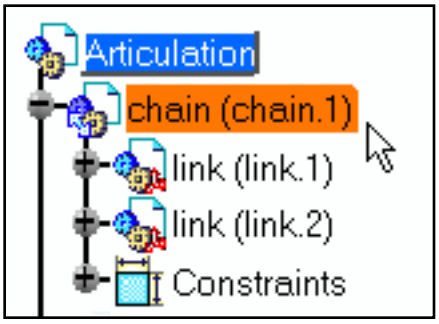

4. You can now move link (link.1) independently from link (link.2). For example drag and drop the compass onto link (link.1) and move it in the direction of your choice.

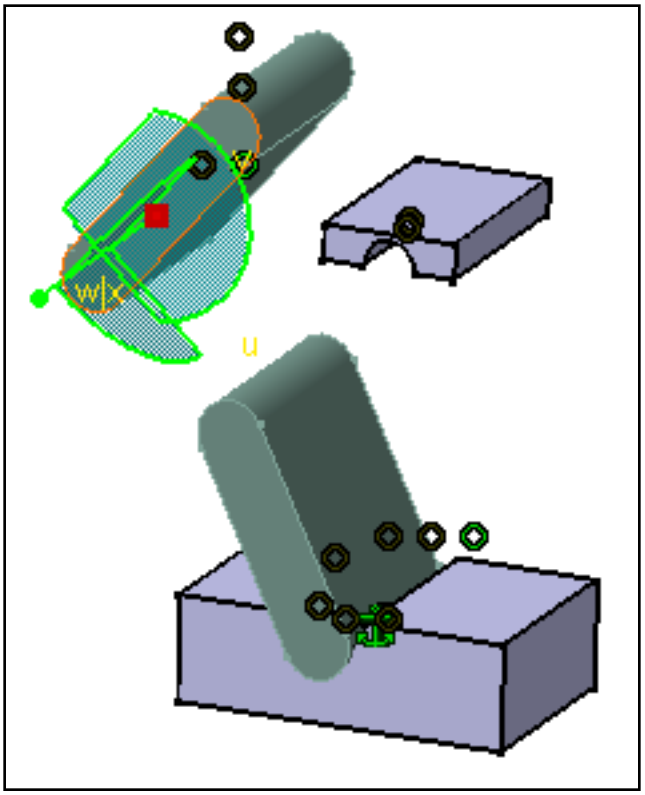

5. Copy and paste chain (chain.1) within Articulation.CATProduct. You can notice that the property "flexible" is copied too.

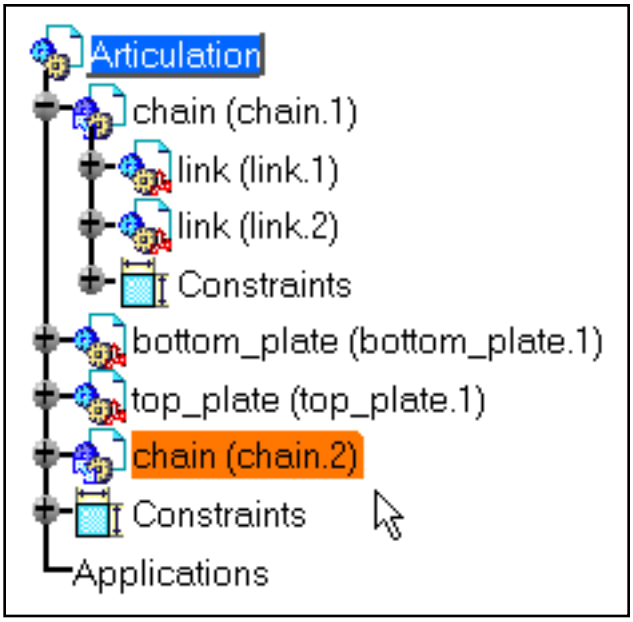

6. To make chain (chain.2) rigid, right-click it and select the chain.2 object -> Flexible/Rigid Sub-Assembly contextual command. A message window appears.

7. Drag and drop chain (chain.2) to clearly see both instances of chain.CATProduct.

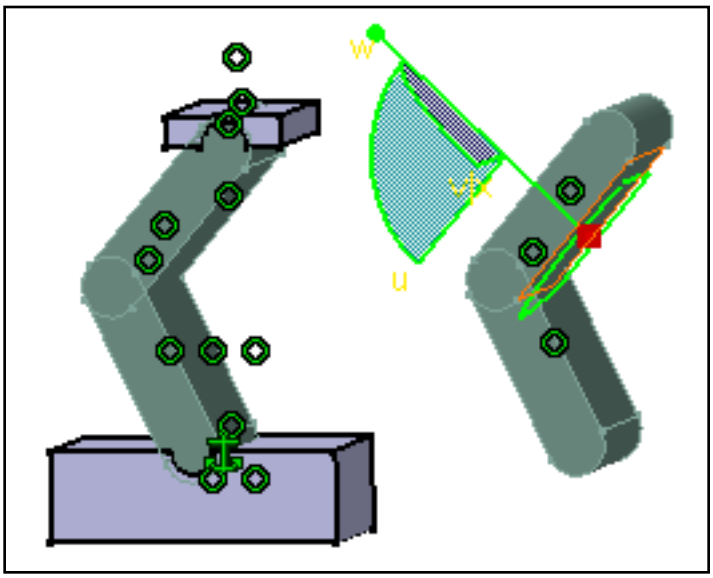

8. In chain.CATProduct, move link (link.1) using the compass.

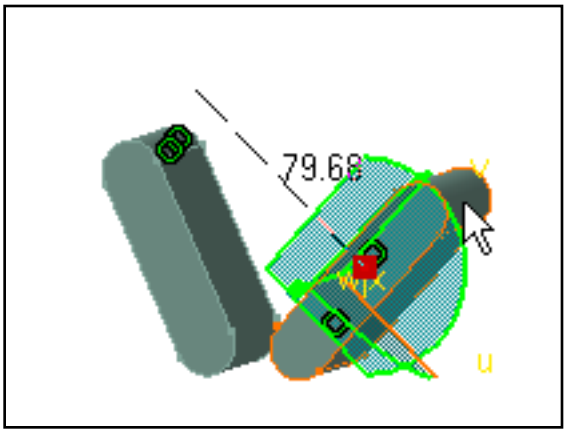

You can notice that because chain (chain.2) is rigid, it inherits the new position of the original chain.CATProduct. Conversely, chain (chain.1) remains unchanged.

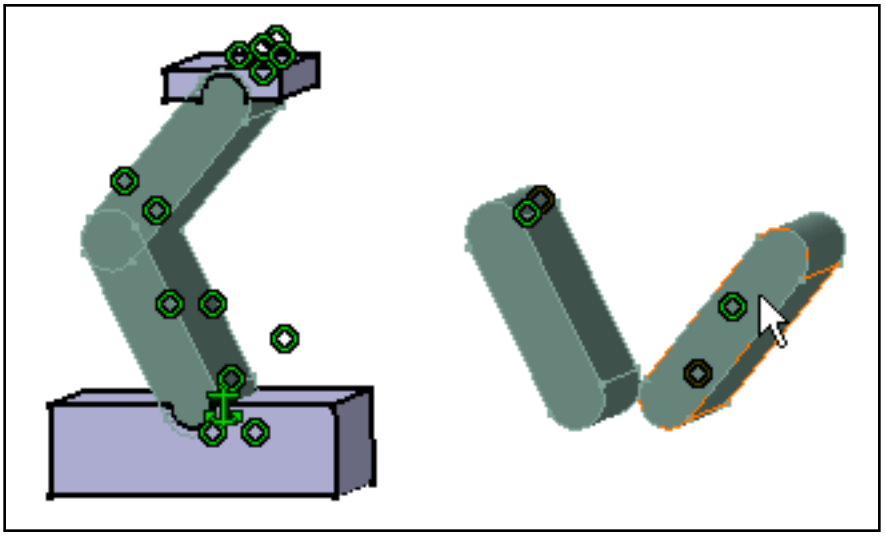

What you need to keep in mind is that rigid sub-assemblies are always synchronous with the original product, whatever mechanical modification you perform.
Flexible sub-assemblies can be moved individually, without considering the position in the original product.
Since Release 7, you can edit the constraints defined for flexible sub-assemblies. The changes made to these constraints do not affect the constraints defined for the original product contained in the reference document.

You can edit the following attributes:

- values
- orientation
- driving/driven properties

9. Set an angular constraint between Link 1 and Link 2 in chain.CATProduct. For example, set 80 as the angle value.

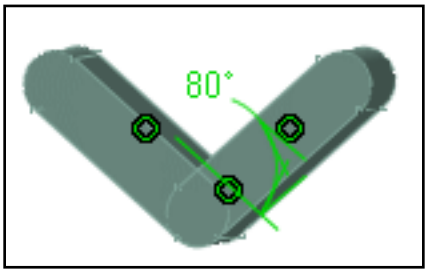

You can notice that both instances, chain (chain.2) and chain (chain.1) inherit this constraint.

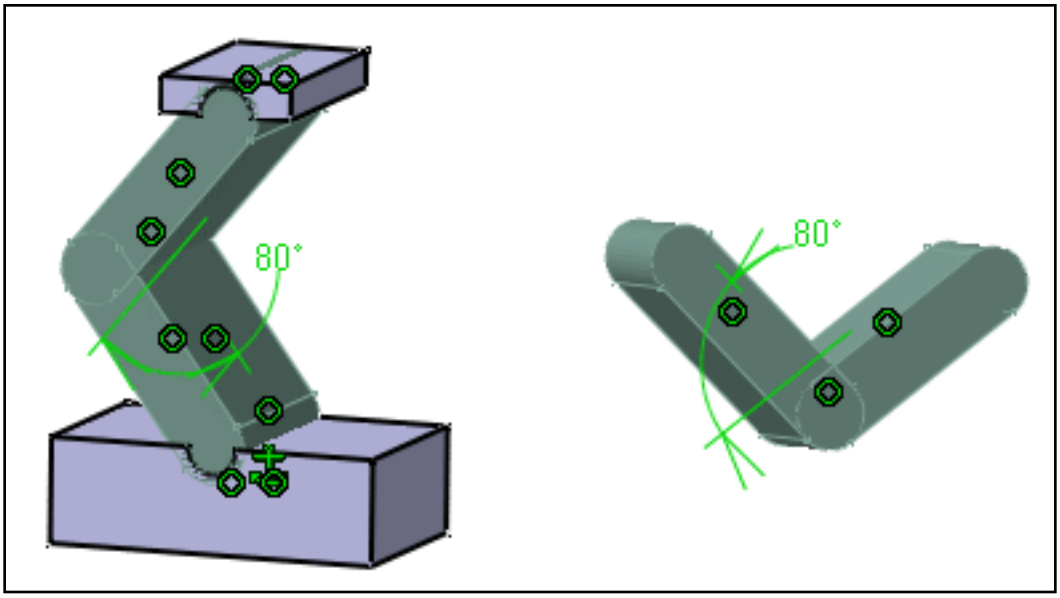

10. Edit the value of the angle constraint for chain (chain.1). Enter 100 for example. This new value is specific to chain (chain.1). Because chain (chain.1) is a flexible sub-assembly, this value can no longer be affected by changes to the value set in the reference document.

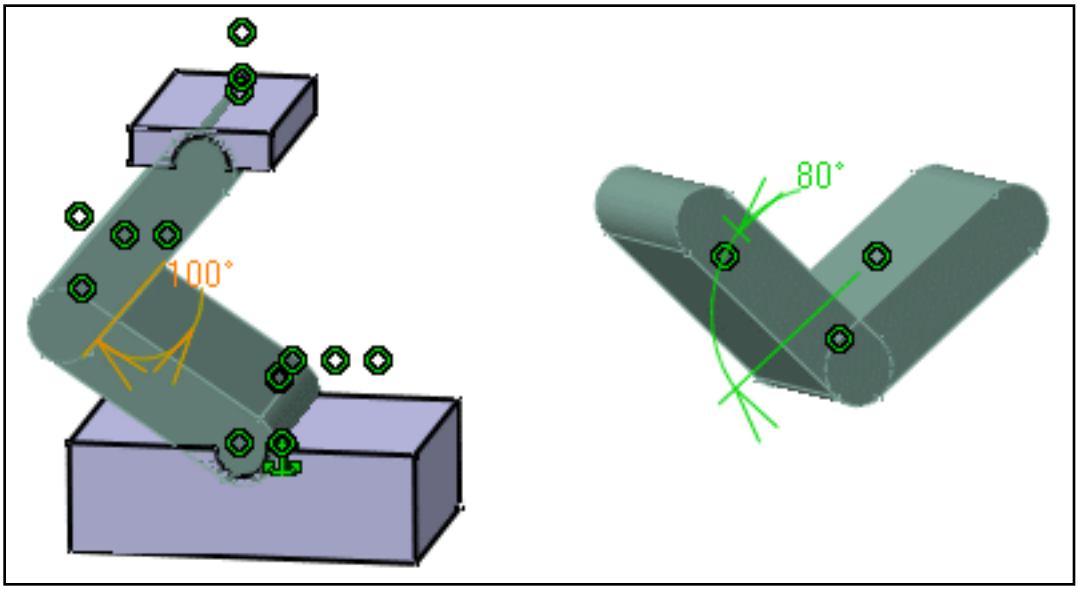

11. Edit the value of the angle constraint set in chain.CATProduct. For example, enter 50 as the new value: because chain (chain.2) is a rigid sub-assembly, and as the constraint value for chain (chain.1) has been already redefined, chain (chain.2) is the only sub-assembly to inherit this new value.

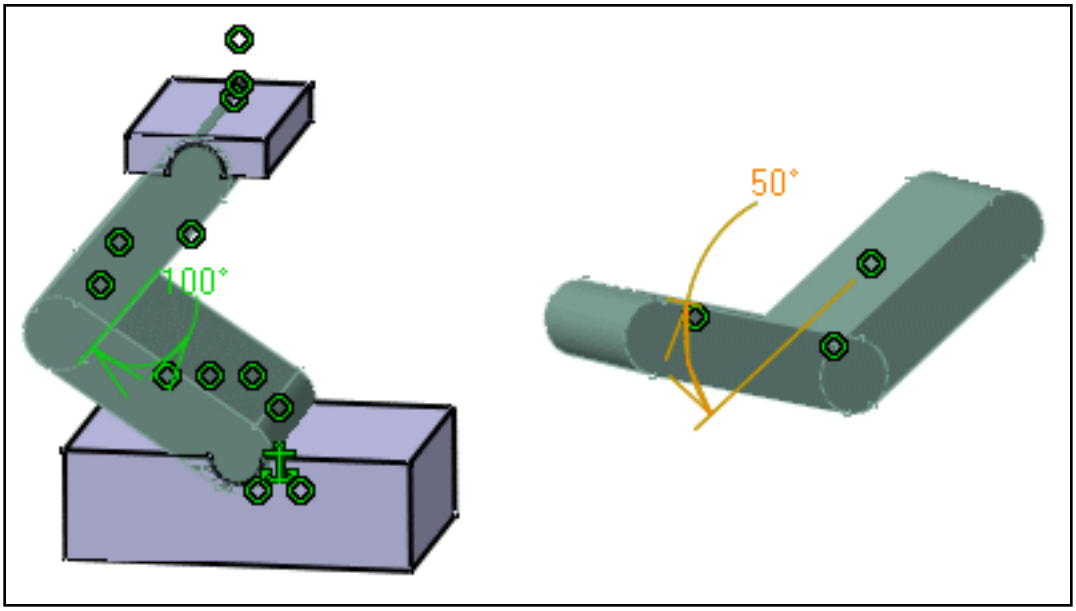

Mechanical Structure

12. Select the **Analyze -> Mechanical Structure**... command to display the mechanical structure of Articulation.CATProduct. This mechanical structure looks different from the product structure.

In Mechanical Structure Tree dialog box, chain.2 is displayed because it is a rigid sub-assembly. Conversely, chain.1 is not displayed since it is a flexible sub-assembly.

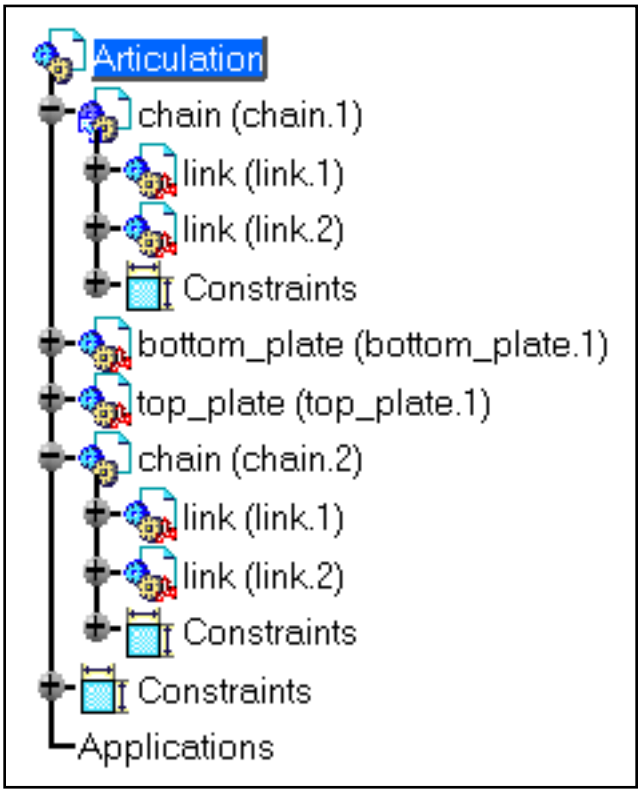

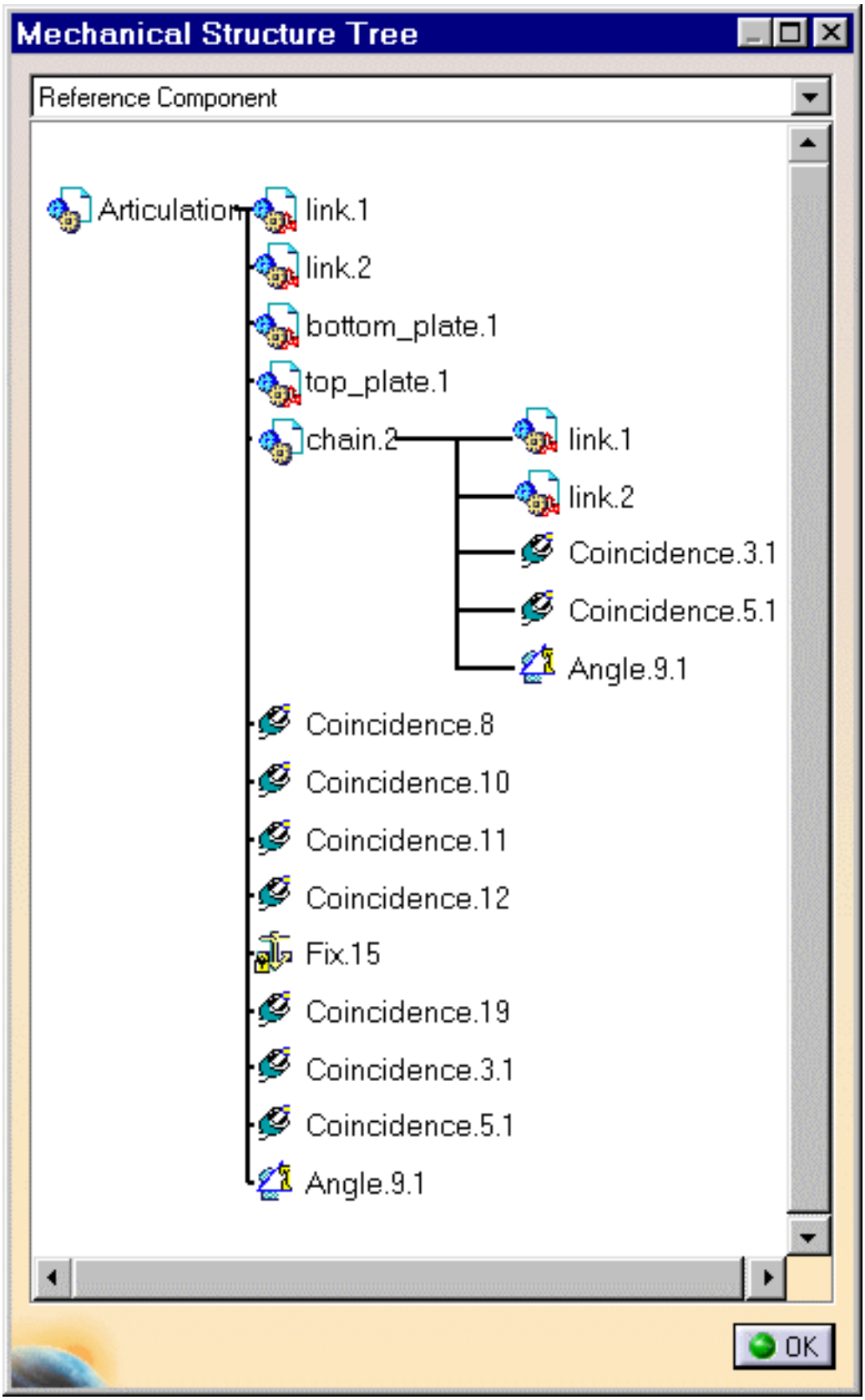

This display is merely informative. Note that you can use the Reframe graph contextual command and the zoom capability to improve the visualization, but also the Print whole contextual command to obtain a paper document. For information on printing, please refer to **Printing Documents**.

Reusing a Part Design Pattern

This task shows you how to repeat a component reusing a pattern created with the *Part Design* workbench.

There are two work modes according to the **Keep link with the pattern** option:

- The option is on: you are creating associativities between the geometry and the pattern definition.
- The option is off: there is no associativity.

Working with associativity, you can decide whether you need to make instances associative with the pattern or generated constraints. This is mean that you can modify a reused pattern through the its definition only: if you delete any instantiated element (geometry or constraint) outside the definition, it will be recreated during the next update of the reuse pattern.

Three types of patterns are reusable:

- Rectangular pattern.
- Circular pattern.
- User pattern.

The option **Automatic switch to Design mode** is available for the Reuse Pattern command. For more about this option, refer to **Access to geometry**.

Open the Pattern.CATProduct document.

1. Select the rectangular pattern in the tree or in the geometry.

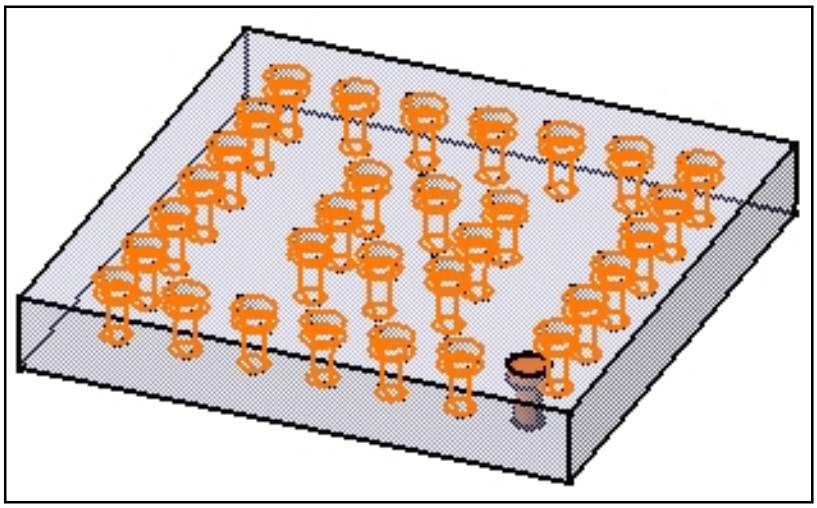

2. Control-click to select the component to be repeated, that is Part2.

Selecting a constraint linking a pattern to a component selects both the pattern and the component.

3. Click the **Reuse Pattern** icon:

The **Instantiation on a pattern** dialog box appears, indicating;

- the name of the pattern.
- the number of instances to be created (for information only).
- the name of the component to be repeated.

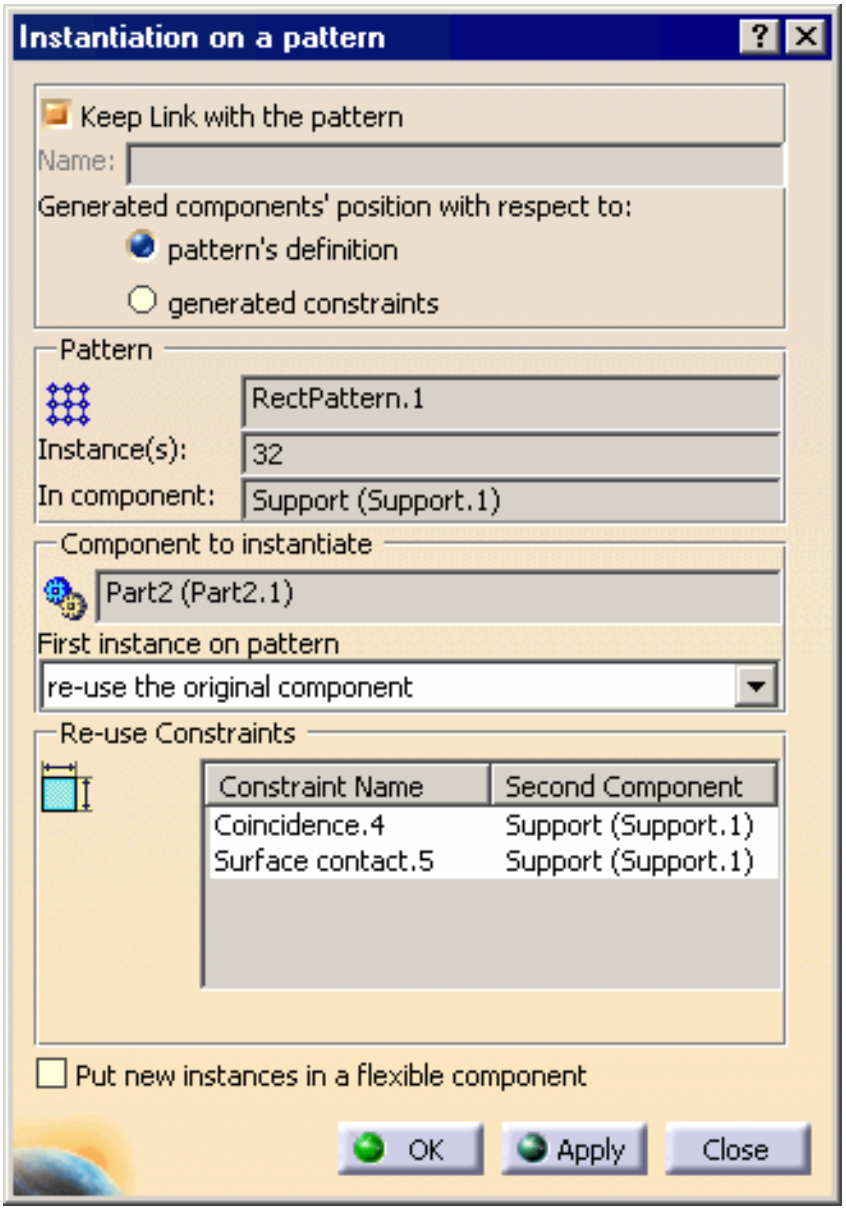

4. Ensure that the option **Keep link with the pattern** is on and check **pattern's definition** to make instances associative with the pattern's geometry.

   To know more about associativity with constraints, refer to Re-using constraints.

   To define the first instance of the component to be duplicated, three options are available:

   - reuse the original component: the original component is located on the pattern, but remains at the same location in the tree.
   - create a new instance: the original component does not move and a new one is created on the pattern.
   - cut & paste the original component: the original component is located on the pattern and moved in the tree.

5. Make sure the option **re-use the original component** is selected.

   To control the location of the components in the tree, two options are available:

   - You can check the option **Put new instances in a flexible component** to gather all instances in the same component
   - or conversely uncheck the option to create as many components as there are generated instances.

6. Check the option **Put new instances in a flexible component**.

7. Click **OK** to repeat the screw.

   31 instances are created on the pattern.

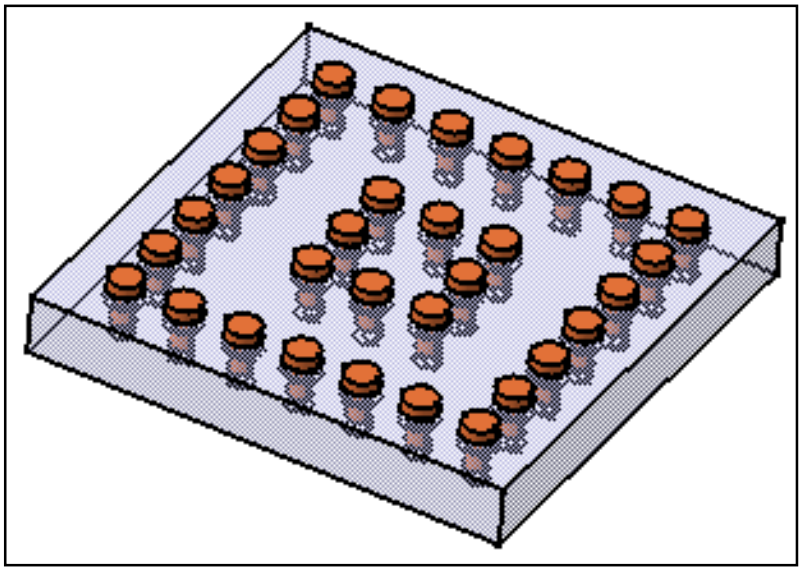

The new component **Gathered Part2 on RectPattern.1** is displayed in the tree. An entity **Assembly features** has been created in the tree. **Reused Rectangular Pattern.1** is displayed below this entity.

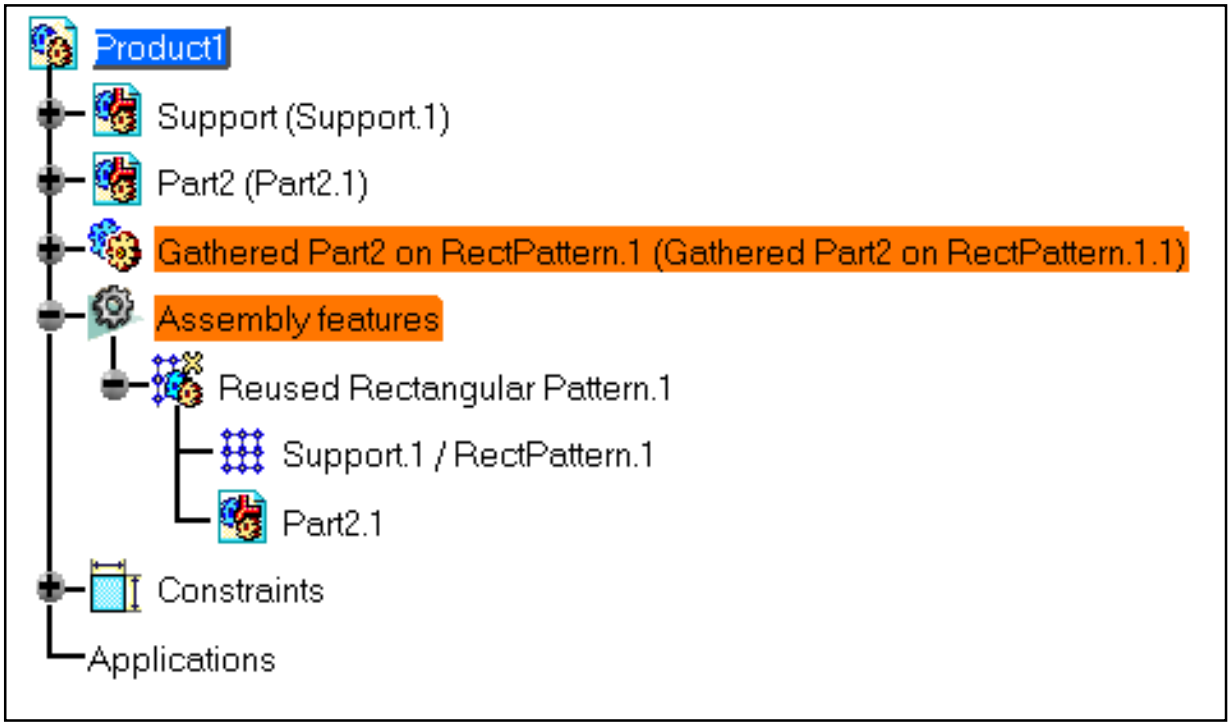

The **Apply** button executes the command but the dialog box remains open so as to let you repeat the operation as may times as you wish.

8. Double-click **RectPattern.1** to edit it. Enter 5 instances for both directions.

9. Return to Assembly Design and make sure that the assembly is updated.

You can notice that associativity between the pattern and the instances of Part2 has been maintained since the option **Keep link with pattern** and **Pattern's definition** were switched on. Only 17 instances have been generated.

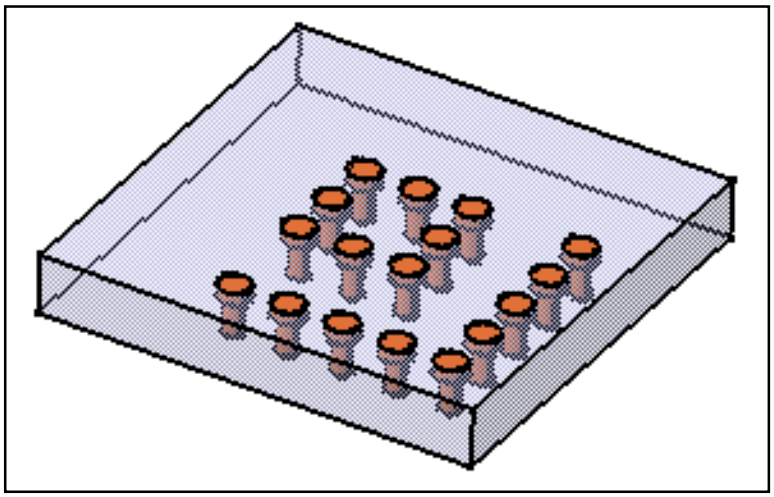

Reusing Constraints

If you use the option **generated constraints**, the Reuse Constraints section displays the constraints detected for the component and makes all original constraints available for selection: You can define whether you wish to reproduce one or more original constraints when instantiating the component.

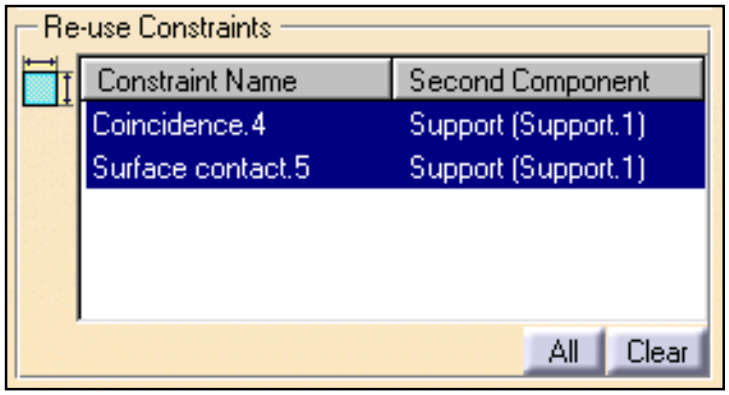

To remove a constraint from the list, click on that constraint. To remove all constraints from the list, click **Clear**. Conversely, Click **All** to include all constraints in the selection.

Contextual Commands

The following contextual commands are available for **Reused Rectangular Pattern.1**:

- **Definition**: displays information on the pattern. If some instantiated components are not verified, you can select them and apply a local update.
- **Deactivate/Activate**: deactivates or activates the constraints defined on the instantiated components.

More about Patterns

This task you have just performed shows you that you can reuse constraints set between the part to be duplicated and the pattern: the generated instances are constrained too.

You can reuse **constraints set between the part to be patterned and other parts**. In the following example, two constraints are set between screw.1 to be patterned and Tray.1 (green part) and two other constraints are set between the screw.1 and Bracket.1 (blue part).

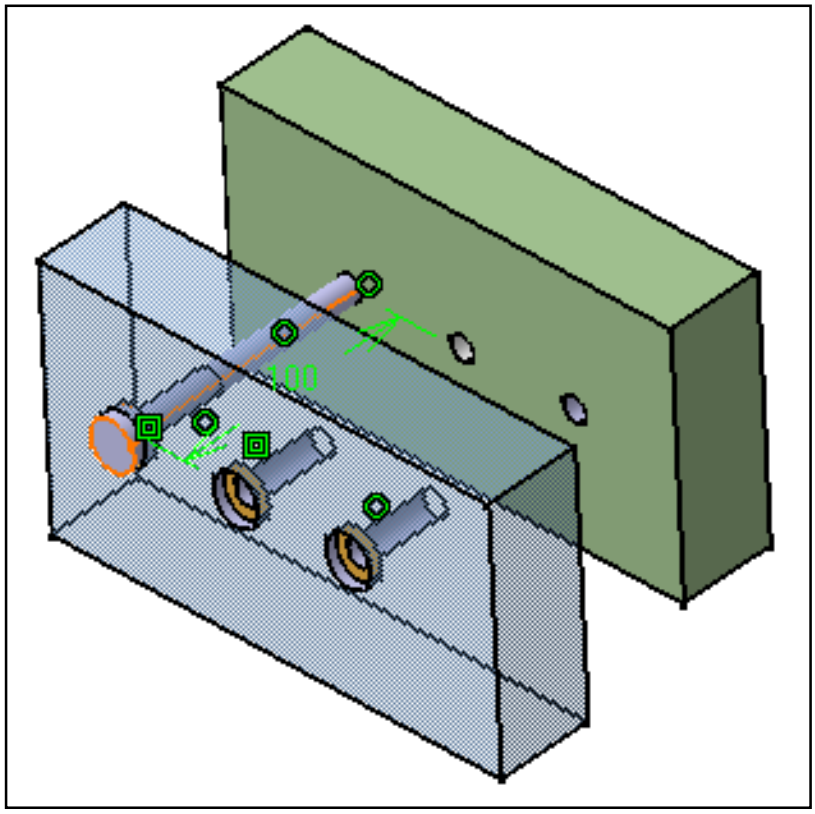

After applying the Reuse Pattern command to the screw, generated instances are constrained too:

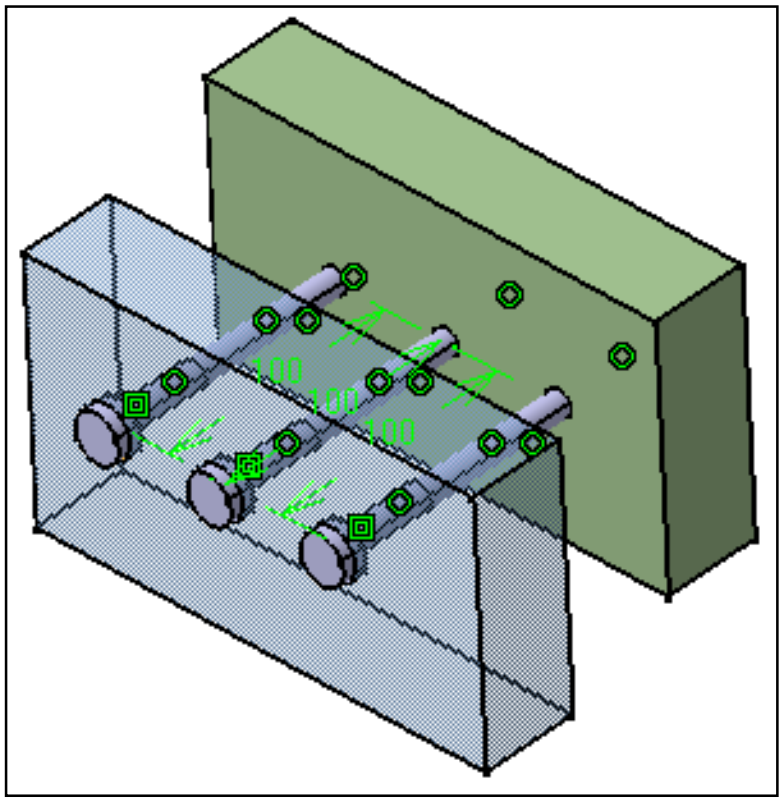

Managing Part and Assembly Templates

Refer to the Quick Reference topic for a comprehensive list of interactions to be carried out on part and assembly templates. Refer to To know more about Part and Assembly Templates to know more about these features.

Creates a Document Template: Select the **Insert -> Document Template Creation ...** command, select the elements making up the document template from the specification tree, define a name for the document template and its reference elements then choose an icon for identifying it.

Introducing the Document Template Definition Window
Creating a Part Template
Instantiating a Part Template
Adding an External Document to a Document Template
Document Templates: Methodology
To know more about Part and Assembly Templates...
Document Templates: Limitations

Introducing the Document Template Definition Window

The **Document Template Definition** window can be accessed by selecting the **Insert->Document Template Creation...** command from the following workbenches:

- Product Structure
- Part Design
- Assembly Design
- Generative Shape Design
- Wireframe and Surface Design

The user can access the Product Knowledge Template workbench from the Part Design and the Product Structure workbenches.

The Documents tab

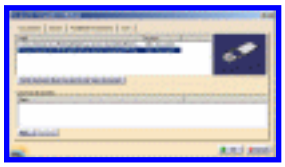

The **Documents** tab shows the complete path and Action of the files referenced in the Template. The Action status can be either:

- Same Document or
- New Document.

If the document is seen as New Document, it is then duplicated and does not have any link with the original component (equivalent of the **New from...** command.)

If the document is seen as Same Document, a link is maintained with the original file.

The Switch between New Document and Same Document button enables you to modify the Action of the components.

The Add... Remove buttons of the External documents sections enable you to select external documents and insert them into the template.

It is now possible to associate non CATIA (ENOVIA VPM V5, ...) documents to a template. To do so, make sure you have enabled the desired environment in the Document Environments field (**Tools->Options->General->Document**.) Your documents will be accessible via the Document Chooser.

The Inputs tab

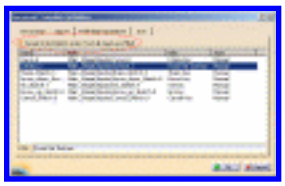

The **Inputs** tab enables you to define the reference elements making up the Template by selecting them in the geometry or in the specification tree.

The **Accept instantiation even if not all inputs are filled** option enables users to determine if the template can be instantiated even if not all inputs are valuated. If all inputs are not valuated, old inputs will be kept and isolated at instantiation. This option can be useful if there is more than one way to position the template in context, if you want all these combinations to be available but you want to use only one of them at the same time. To see an example, see Creating a Part Template and Instantiating a Part Template.

For a clearer definition, you can select these items in the viewer and enter a new name in the **Role** field.

The **Role** field enables you to select one of the items displayed in the window and to rename it. It is used at instantiation through the Use identical name button in the Insert object panel.

The **Type** column indicates if the input is manual or automatic. The inputs are considered as

- **Manual** if they are added manually
- **Automatic** if they are external references that point an object defined outside the template.

The Published Parameters tab

The **Published Parameters** tab enables you to define which parameter value used in the Template you will be able to modify when instantiating it.

The **Edit List...** button enables you to access the list of parameters, and to select those you want to publish. These parameters are displayed in the Part Numbers viewer.

The **Auto modify part numbers with suffix** check box, if checked, automatically modifies the part numbers at instantiation if the part numbers already exist.

- Note that if the user wants to manage the way part numbers are modified at instantiation, he just needs to uncheck this option and click, at instantiation, the Parameters button in the Insert Object dialog box. This way he can access the part numbers that he wants to modify.

- The unicity of part numbers is now ensured when instantiating document templates into different documents or when the document template is used by different users. When the part numbers renaming mode is set to automatic, a suffix parameter is automatically published by the document template. At instantiation, after valuating the inputs of the document template, suffixes can be changed by clicking the Parameters button in the Insert Object window. Note that it is not possible to "unpublish" the suffix or to change its role.

The Icon tab

The **Icon** tab enables you to modify the icon identifying the Template in the specifications tree. A subset of icons is available when clicking the **Icon choice** button.

Clicking **...** displays the Icon Browser, showing all icons loaded in your *CATIA* session.

The **Grab screen** button enables you to capture an image of the template to be stored along with its definition.

The **Remove preview** button enables you to remove the image if you do not need it.

The assembly structure of the documentation template should not be modified after the document template definition (you cannot add or remove documents for example.)

Creating a Part Template

This scenario explains how to create a part template containing a keypad that will be instantiated into a CATProduct document. In this scenario, the user:

- Creates 2 document templates. When creating the first document template, he does not check the **Accept instantiation even if not all inputs are filled** option (Steps 1 to 4). When creating the second document template, he checks the **Accept instantiation even if not all inputs are filled** option (Steps 5 to 8). To know more about this option, see Introducing the Document Template Definition Window.
- Saves both document templates in a catalog.

Creating the first template

1. Open the PktMobilePhoneKeypad.CATPart file. The following image displays.

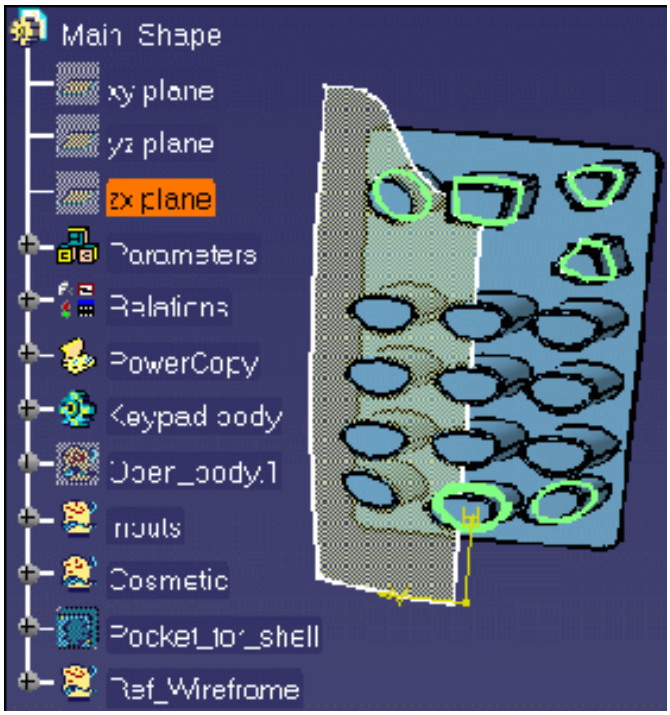

2. From the **Insert** menu, select the **Knowledge Templates->Document Template ...** command (in the Part Design workbench) or, if in the Product Knowledge Template workbench, click the **Create a Document Template** icon ( ). The **Document Template Definition** window displays.
3. In the **Document Template Definition** window, click the **Inputs** tab to select the inputs. To do so, proceed as follows:

- In the geometry, select the following features:

- Curve.8
- Sharp_Sketch.3
- Arrow_down_Sketch.6
- Ok_Sketch.7
- Arrow_up_Sketch.8
- Cancel_Sketch.9
- Surface.3

- In the **Inputs** tab, select the Curve.8 feature and assign it a role in the **Role** field. Repeat the same operation for the features you selected. The final Inputs tab should look like the picture below.

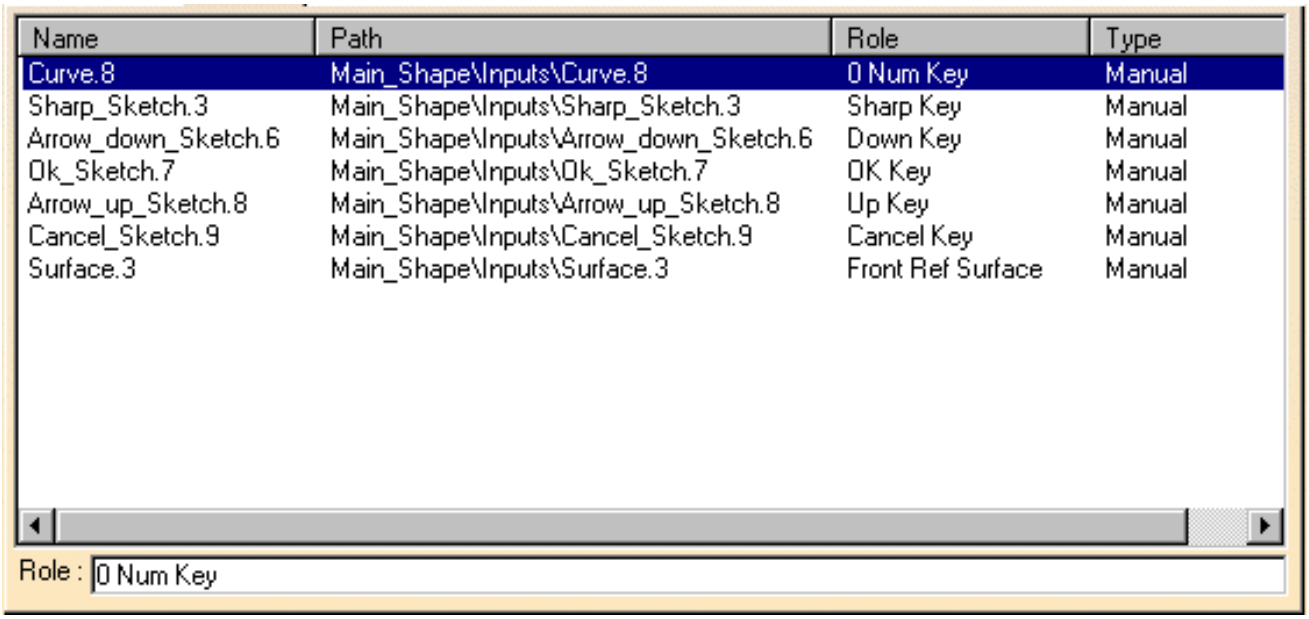

Name	Path	Role	Type
Curve.8	Main_Shape\Inputs\Curve.8	0 Num Key	Manual
Sharp_Sketch.3	Main_Shape\Inputs\Sharp_Sketch.3	Sharp Key	Manual
Arrow_down_Sketch.6	Main_Shape\Inputs\Arrow_down_Sketch.6	Down Key	Manual
Ok_Sketch.7	Main_Shape\Inputs\Ok_Sketch.7	OK Key	Manual
Arrow_up_Sketch.8	Main_Shape\Inputs\Arrow_up_Sketch.8	Up Key	Manual
Cancel_Sketch.9	Main_Shape\Inputs\Cancel_Sketch.9	Cancel Key	Manual
Surface.3	Main_Shape\Inputs\Surface.3	Front Ref Surface	Manual

Role : 0 Num Key

4. Click the **Published Parameters** tab to publish parameters. To do so, proceed as follows:

- Click the Edit List... button. The **Select parameters to insert** window displays.

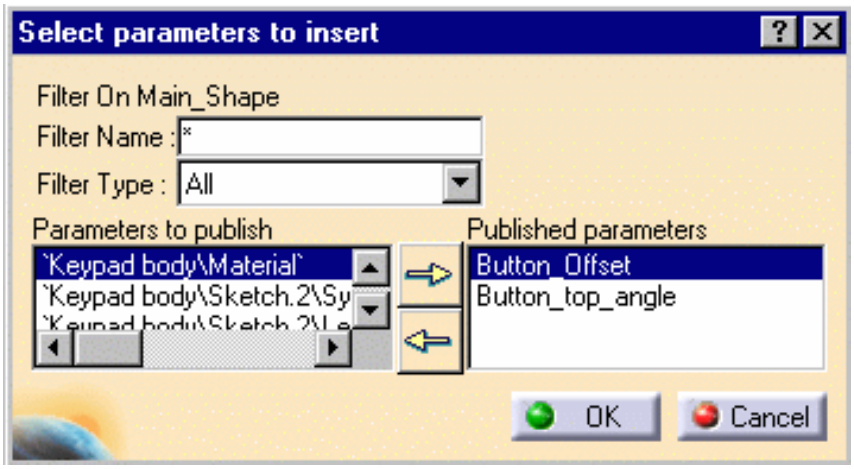

- Use the arrow to select the **Button_Offset** and the **Button_top_angle** parameters in the **Parameters to publish** column.

- Click **OK** twice. The Document template is added to the KnowledgeTemplates node.

- Right-click DocumentTemplate.1 and select the **Properties** command to rename the document template.
- In the Feature Name field, enter Keypad1. Click **OK** to validate.

Creating the second template

1. From the **Insert** menu, select the **Knowledge Templates->Document Template ...** command (in the Part Design workbench) or, if in the Product Knowledge Template workbench, click the **Create a Document Template** icon ( ). The **Document Template Definition** window displays.
2. In the **Document Template Definition** window, click the **Inputs** tab and select the following inputs in the specification tree:
   - Curve.8
   - Sharp_Sketch.3
   - Arrow_down_Sketch.6
   - Ok_Sketch.7
   - Arrow_up_Sketch.8
   - Cancel_Sketch.9
   - Surface.3
3. Check the **Accept instantiation even if not all inputs are filled** check box.
4. Click the **Published Parameters** tab to publish parameters. To do so, proceed as follows:

- Click the Edit List... button. The **Select parameters to insert** window displays. In the **Parameters to publish** column, click the **Button_Offset** and the **Button_top_angle** parameters and use the arrow to select them.

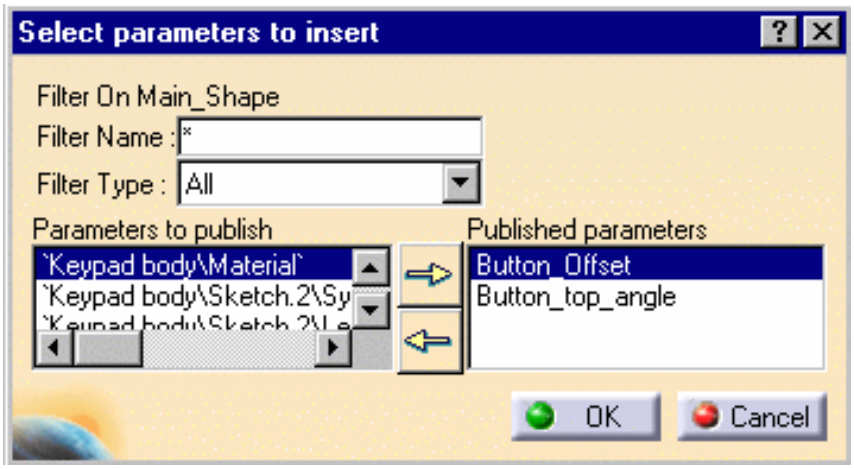

- Click **OK** twice. The Document template is added to the KnowledgeTemplates node.

- Right-click DocumentTemplate.2 and select the **Properties** command to rename the document template.

- In the Feature Name field, enter Keypad2. Click **OK** to validate.

- Save your file.

5. Store the document template in a catalog. To do so, proceed as follows:

   - If not already in the **Product Knowledge Template** workbench, from the **Start->Knowledgeware** menu, access the **Product Knowledge Template** workbench.

   - Click the **Save in catalog** icon ( ). The Catalog save dialog box displays.

   - Click **OK** to create a new catalog or the **...** button to change the name of the catalog. The catalog is created.

   - Click here to display the result catalog file. Click here to display the result .CATPart file.

6. Close your file and proceed to the next task: Instantiating a Part Template.

Refer to the Quick Reference topic for a comprehensive list of the interactions that can be carried on Document Templates.

Instantiating a Part Template

This scenario explains how to instantiate a template into a CATProduct file. It is divided into 2 different parts:

- The user instantiates Keypad1, a document template saved in the PktKeypadscatalog.catalog.
- The user instantiates Keypad2, a document template saved in the PktKeypadscatalog.catalog.

To carry out this scenario, you need the following files:

- PktMobilePhoneSupport.CATProduct that is made up of the following CATPart and CATProduct files:

PktBottomcase.CATPart	PktBattery.CATPart
PktBody.CATPart	PktLens.CATPart
PktIndus.CATPart	PktLCD30-28.CATPart
PktFrontShell.CATPart	PktElectronic.CATProduct
PktPlanarCard.CATProduct	PktSpeaker.CATPart
InteractiveBoard.CATPart	PktCapacitor_500.CATPart
PktCapacitor_700.CATPart	PktChip_AC30.CATPart
PktChip_AC110.CATPart	PktChip_AC20.CATPart

- PktKeypadscatalog.catalog: This catalog contains 2 document templates: Keypad1 and Keypad2. When creating Keypad1, the **Accept instantiation even if not all inputs are filled** option was unchecked. When creating Keypad2, the **Accept instantiation even if not all inputs are filled** option was checked.

Instantiating Keypad1

1. Open the PktMobilePhoneSupport.CATProduct file.

2. Click the **Open Catalog** icon ( )and select the PktKeypadscatalog.catalog that you created in the Creating a Part Template topic. The Catalog Browser opens.

3. Double-click DocumentTemplate, 7 inputs and Keypad1. The **Insert Object** window opens. (Click the graphic opposite to enlarge it).

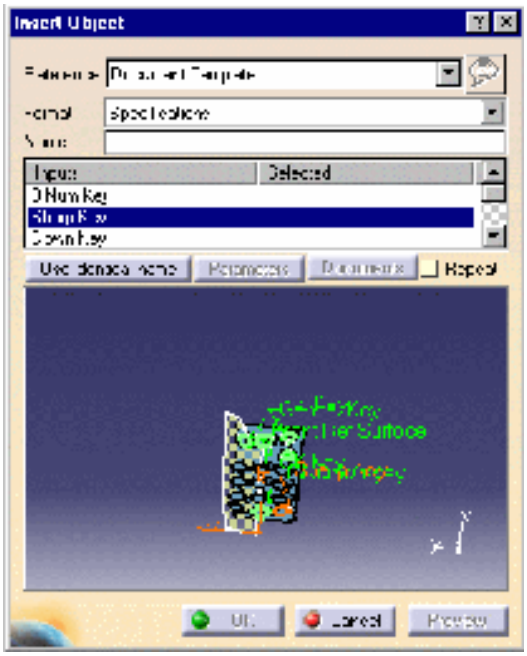

To know more about the Insert Object dialog box, click here.

4. Value the **Inputs** by selecting the publications located below the Industrial Design node in the specification tree or click the **Use Identical Name** button in the **Insert Object** window.

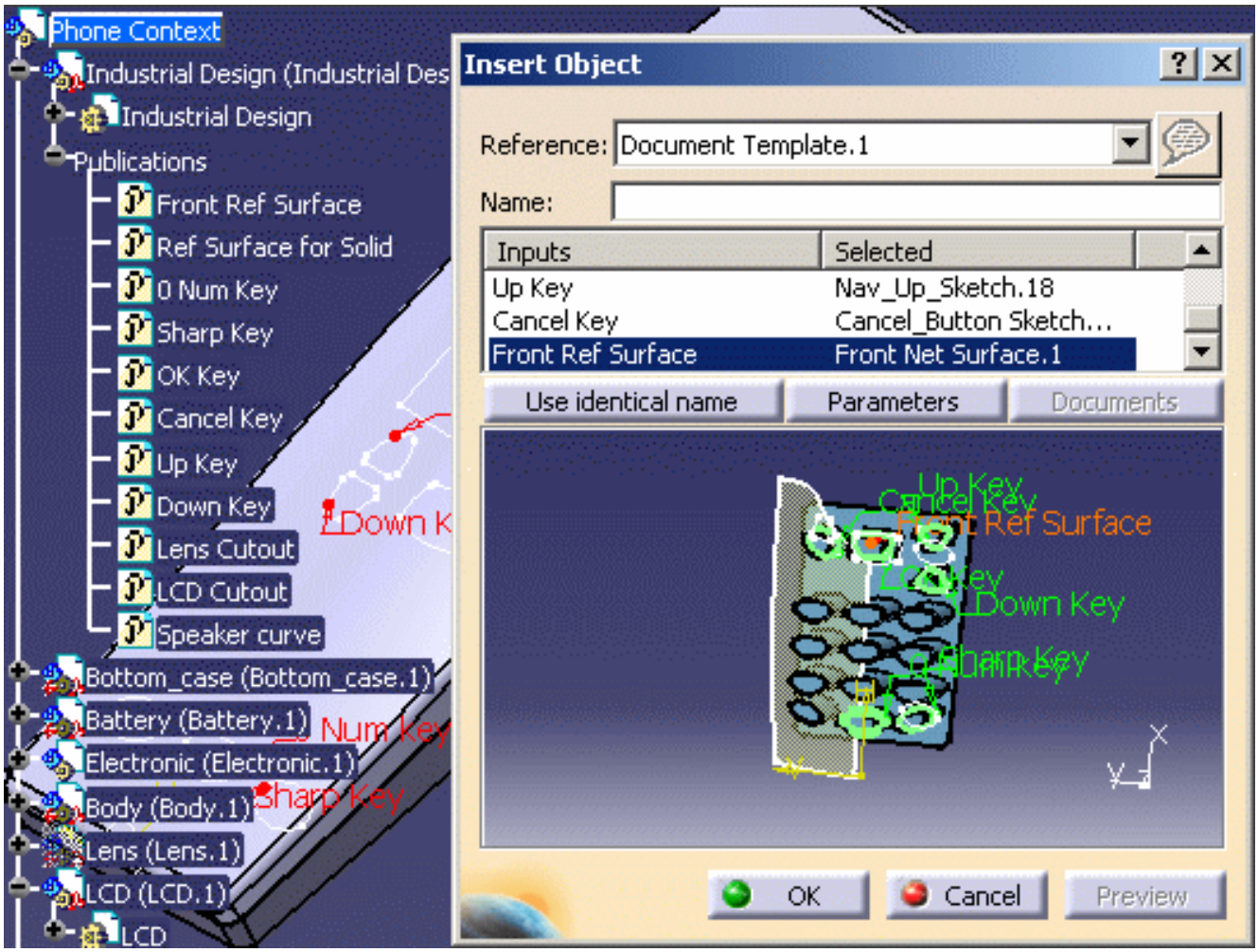

5. Make the appropriate selections in the **Replace Viewer window** (see picture below) and click **OK** when done.

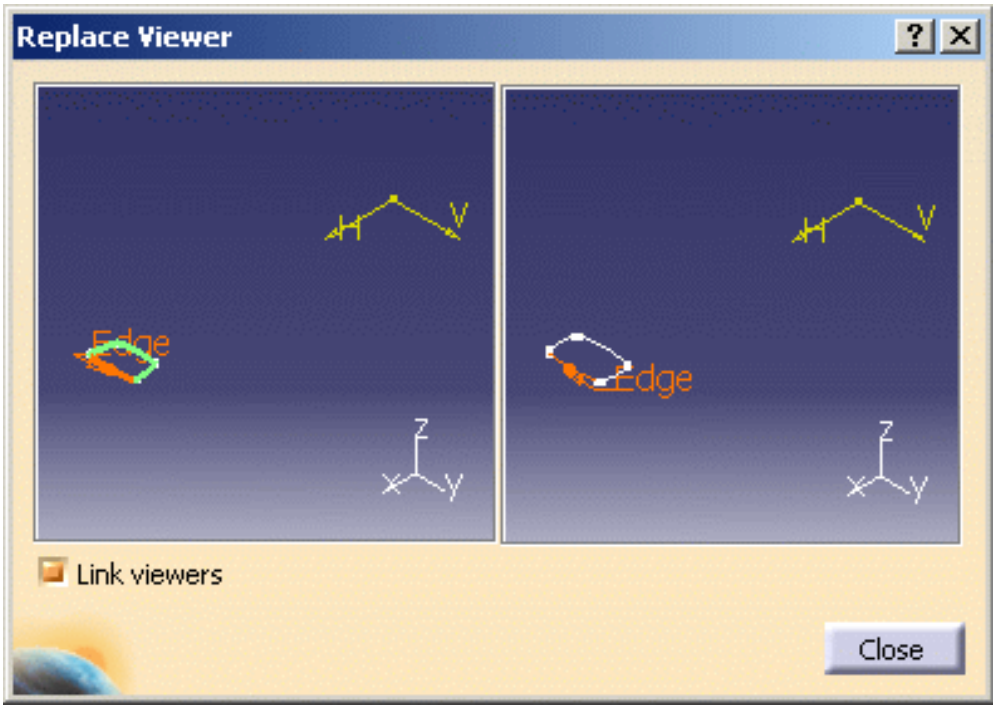

Note that in some cases, when instantiating a part or assembly template, the replacing element does not present the same sub-elements as the replaced element. Therefore you need to clearly indicate in a specific dialog box, the Replace Viewer, how to rebuild the geometry from the replacing element.

6. Click **OK** in the Check warning box, then **Close**. The keypad is instantiated (see picture below.)

7. Close your file.

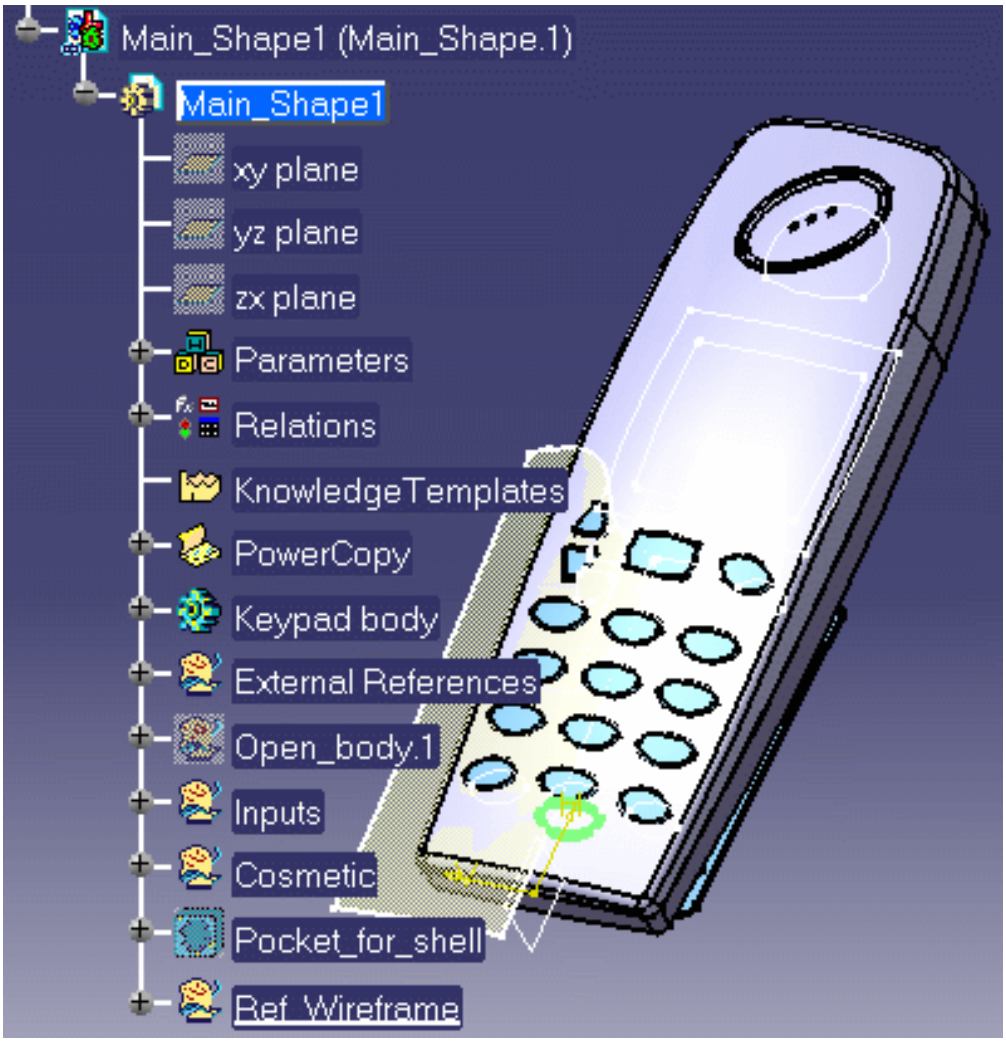

Instantiating Keypad2

1. Open the PktMobilePhoneSupport.CATProduct file.
2. Click the **Open Catalog** icon and select the PktKeypadscatalog.catalog that you created in the Creating a Part Template topic. The Catalog Browser opens.
3. Double-click Document Template, 7 inputs and Keypad2. The **Insert Object** window opens.
4. Click **OK** in the Insert Object window. The keypad is instantiated. Note that you do not have to value the inputs since the **Accept instantiation even if not all inputs are filled** option was checked when creating the Keypad2 part template.

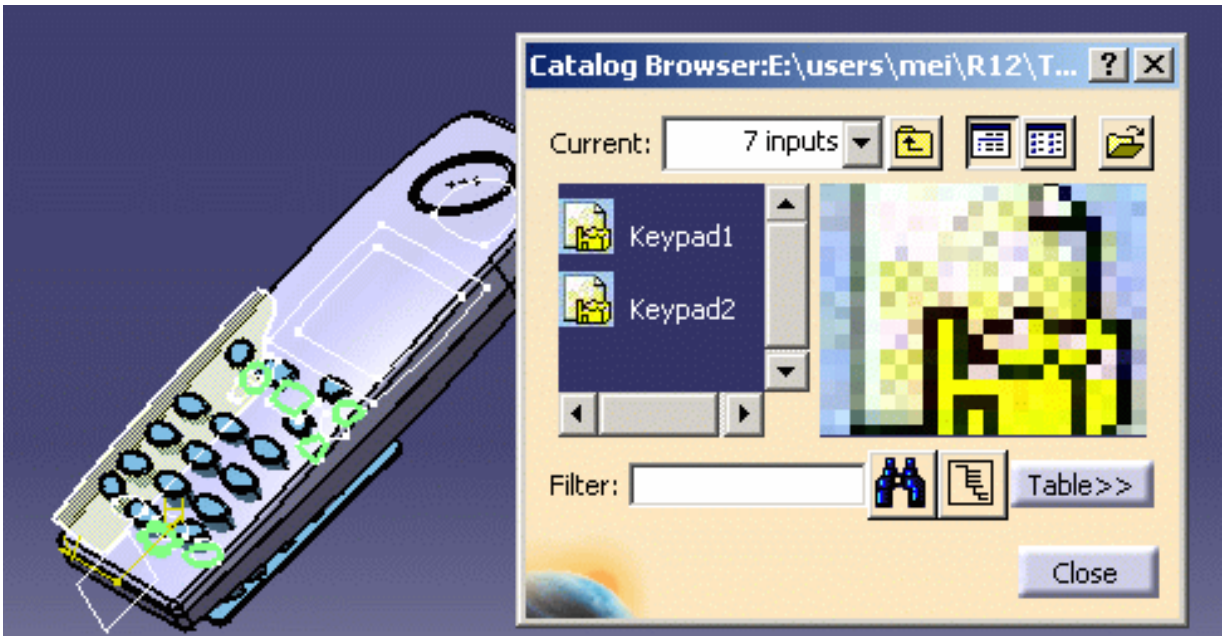

Refer to the Quick Reference topic for a comprehensive list of the interactions that can be carried on Part Templates.

Adding an External Document to a Document Template

This task shows how to insert a drawing into a part template and how it is updated at instantiation. The scenario is divided into the following steps:

- Creating a drawing from an existing part
- Creating the part template
- Instantiating the part template and updates the generated drawing.

Note that the document(s) that can be added to part and assembly templates must belong to one of the following types:

- .CATDrawing
- .CATProcess
- .CATAnalysis

Prior to carrying out this scenario, make sure that the **Keep link with selected object** is checked (**Tools->Options...->Infrastructure->Part Infrastructure->General**).

1. Open the PktPadtoInstantiate.CATPart file. The following image displays.

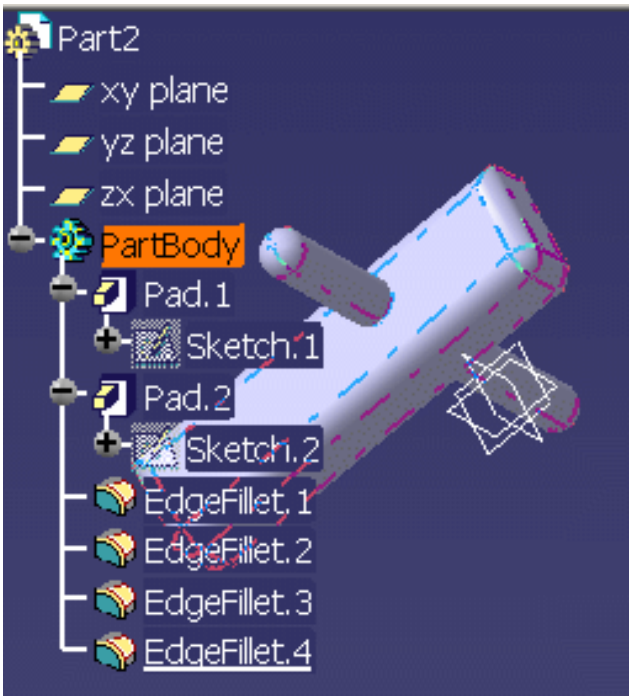

2. From the **Start->Mechanical Design** menu, access the **Drafting** workbench. The **New**

Drawing Creation Window displays.

3. Select the **All views** configuration and click **OK**.

4. The drawing corresponding to the pad is generated.

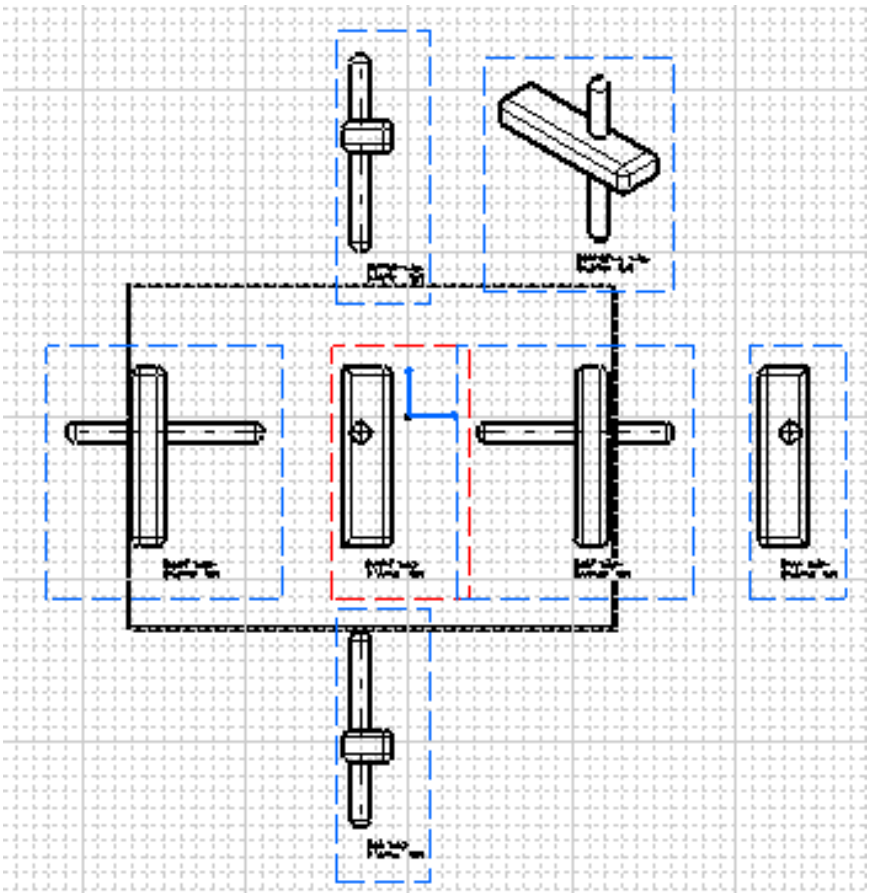

4. Save your drawing and close the file. Click here to see the generated drawing.

5. Go back to the PktPadtoInstantiate.CATPart file to create a part template. To do so, proceed as follows:

   - Select the **Knowledge Templates->Document Template ...** command. The **Document Template Definition** window displays.

   - Click the **Add...** button in the **External documents** field and select the .CATDrawing file you have just created in the **File Selection** window (or use the PktPadDrawing.CATDrawing). Click **Open**.

   - Click the **Inputs** tab and select Sketch.1 and Sketch.2 in the geometry or in the specification tree.

- Click the **Published Parameters** tab and click the **Edit List...** button. The **Select parameters to insert** window displays. Select the following parameters using the arrow button:
  - PartBody\Pad.1\FirstLimit\Length
  - PartBody\Pad.2\FirstLimit\Length
- In the **Published Parameters** tab, select PartBody\Pad.1\FirstLimit\Length and rename it to Pad_Width in the **Name:** field, then select PartBody\Pad.2\FirstLimit\Length and rename it to Pad_Length.
- Click **OK** to validate. Save your file and close it.

6. Open the PktProduct.CATProduct file.
7. From the **Start->Knowledgeware** menu, access the **Product Knowledge Template** workbench (if need be).
8. Click the **Instantiate From Document** icon ( ) and select the PktPadtoInstantiate_result.CATPart containing the document template. Click **Open**. The **Insert Object** dialog box displays.
9. Expand the PartBody\Pad.1 node in the specification tree, select Sketch.1, and make the appropriate selections in the opening **Replace Viewer** window (see graphic below). Click **Close** when done.

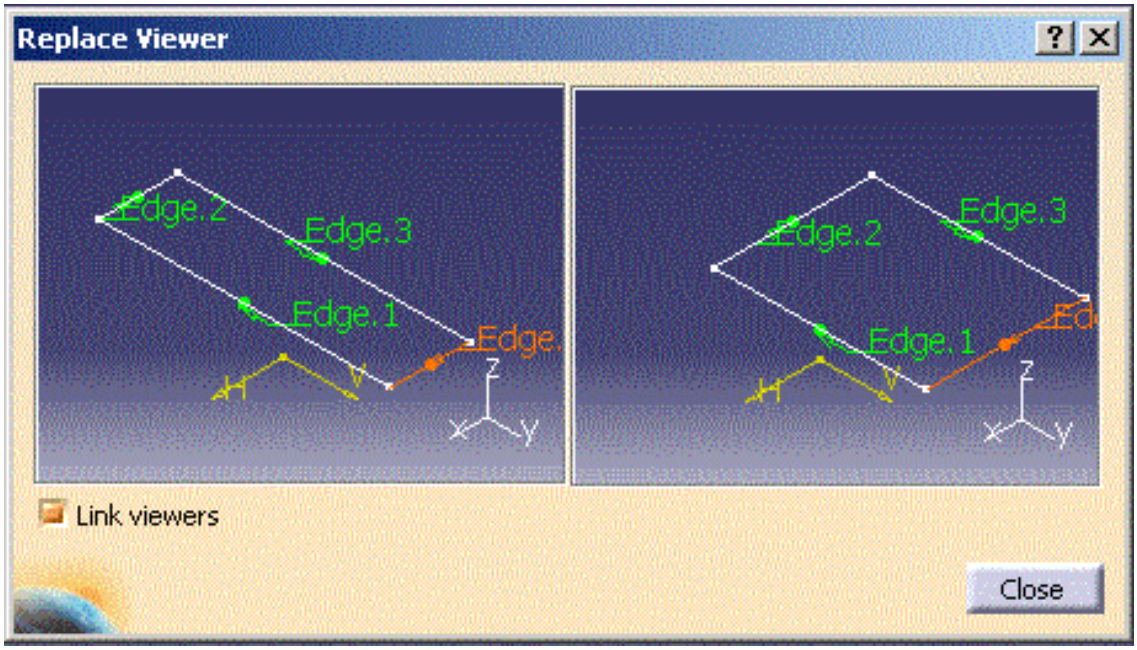

10. Select Sketch.2 in the geometry or in the specification tree.

11. Click the **Parameters** button and enter 10mm in the **Pad_Width** field and 90 in the **Pad_Length** field.

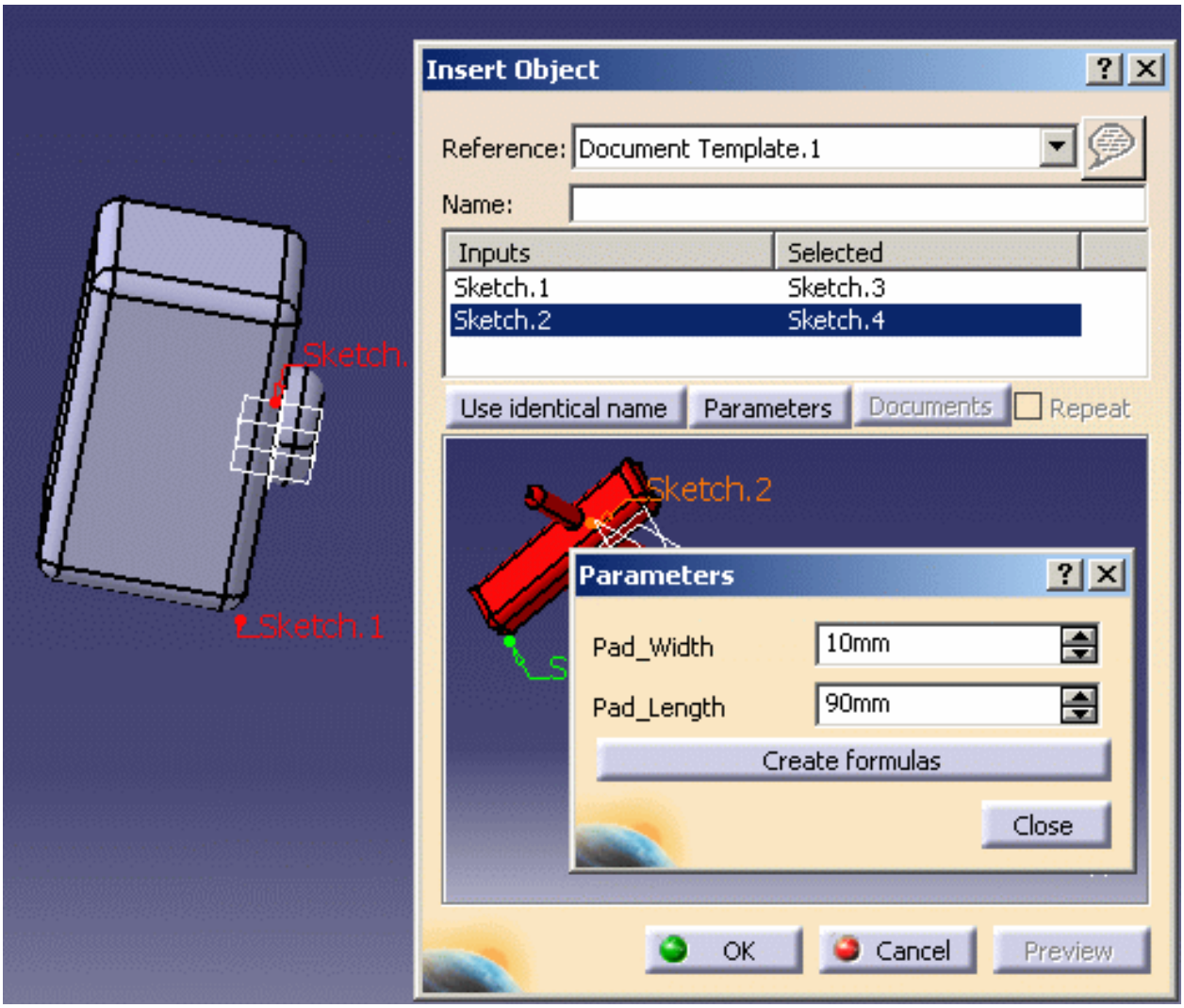

12. Click **Close** and **OK** to validate. A message is fired indicating that the external document was regenerated. Click **OK**. The document template was instantiated. (see picture below).

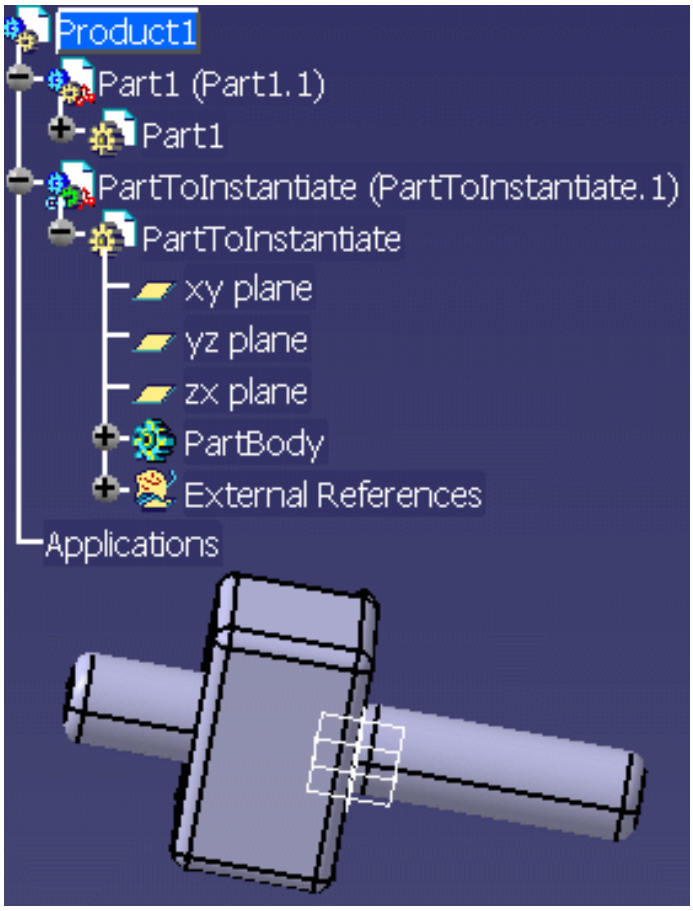

13. From the **Window** menu, access the generated .CATDrawing file. Right-click CATDrawing2 in the left part of the window and select the **Update Selection** command. The drawing is updated and matches the new product.

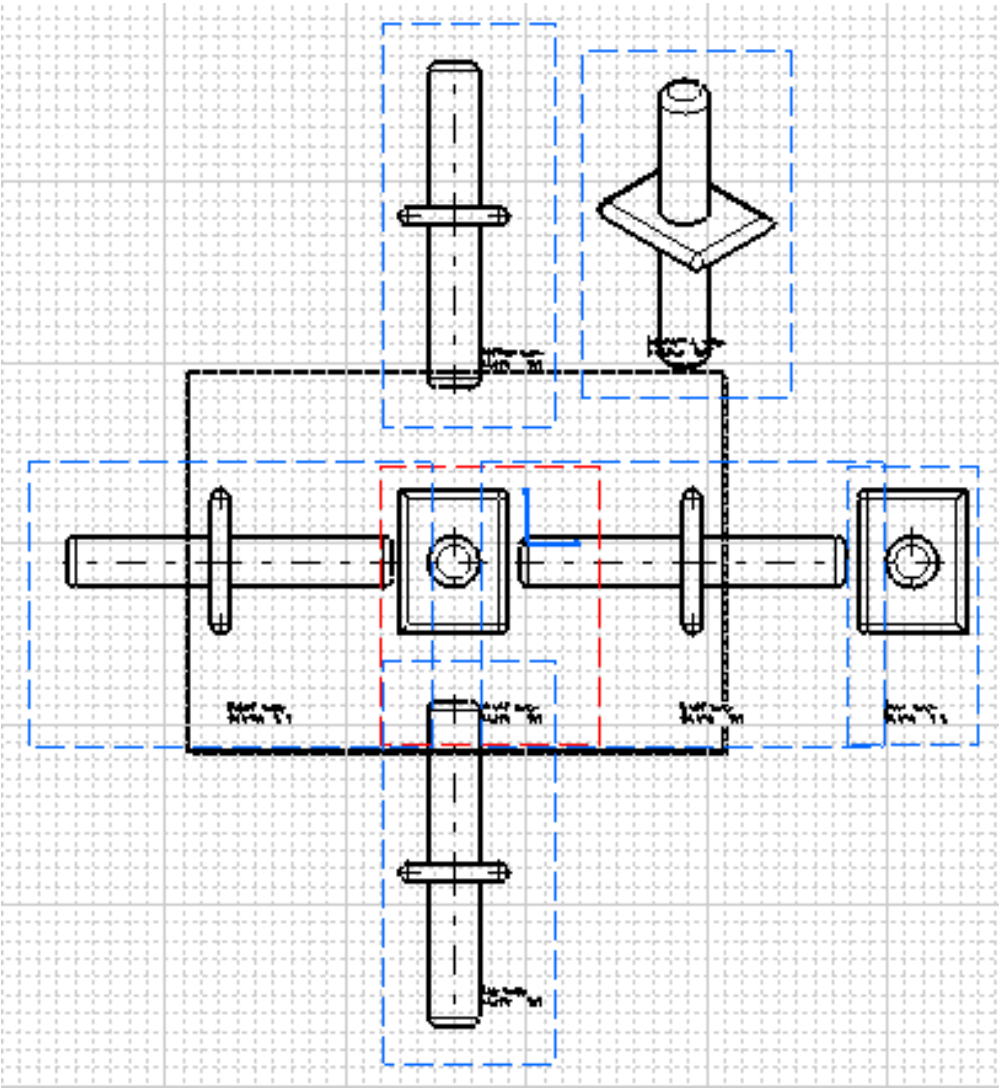

Refer to the Quick Reference topic for a comprehensive list of the interactions that can be carried out on document templates.

Document Templates: Methodology

- It is possible for the user to define document templates based on contextual products and parts or on isolated parts and products. It is highly recommended to work with isolated documents: not so many documents will be instantiated (when working with contextual products, the context products are needed for instantiation).
- The assembly structure of the documentation template should not be modified after the document template definition (you cannot add or remove documents for example.)

To know more about Part and Assembly Templates...

Part and Assembly Templates are templates that work at the part or at the assembly level.

The **Document Template Definition** window can be accessed by selecting the **Insert->Document Template Creation...** command from the following workbenches:

- Part Design
- Generative Shape Design
- Wireframe and Surface Design
- Assembly Design
- Product Structure

Working with Part Templates

A part created in Catia may contain user parameters and geometry data. It is not a contextual part. The user can create a part template that references that part. This template is a feature that is created in the CATPart document itself (very similar to the PowerCopy definition) and stored in a catalog. Several part templates may be defined in the same CATPart document.

To create a part template, the user:

- selects parameters and geometry data that will be considered as the template inputs (he can assign a role and a comment to each input).
- publishes some internal parameters (name and comment). The part number is automatically published.
- gives a name, comment, URL, icon to this template.

In product structure context, the part is inserted as a component of the current product.

Working with Assembly Templates

A user creates an assembly interactively. Then, he wants to create an assembly template that references the root product of this assembly.

To create an assembly template, the user:

- selects parameters and geometry data that will be considered as the template inputs (he can assign a name to each input).
- publishes some internal parameters (name and comment).
- chooses if:

- the part numbers of replicated components are automatically published.
- for each part or each sub-assembly, this sub-component will be replicated at instantiation or if only a reference to this sub-component will be created (a standard component).
- he wants to select external documents (Drawings / Analysis) that references elements of the product structure. Those elements will be replicated at instantiation.

- assigns a name, comment, URL, icon to this template.

The template definition is a feature located in the CATProduct document itself. Several assembly templates may be defined in the same CATProduct document.

Document Templates: Limitations

A publication cannot point an object already published more than once. When creating the import link, the published object is looked for and the import is created on the first publication found which might not be the one that has the same name as the input.
The only information that the Document Template can provide is the final object itself (infrastructure does not allow to specify the publication, but only the pointed object). The publication is then automatically retrieved by the link infrastructure.

Managing Enhanced Scenes

About Enhanced Scenes
Creating an Enhanced Scene
Generating an Enhanced Scene from an Old Scene
Browsing Enhanced Scenes using the Scenes Browser
Activating an Enhanced Scene
Exploding an Assembly
Overloading Product Position in Enhanced Scene Context
Adding, Replacing and Deleting Components in the Assembly
Checking Component Position
Saving a Viewpoint in Enhanced Scene Context
Creating an Enhanced Scene Macro
Applying an Enhanced Scene Context to an Assembly
Applying an Assembly Context to a Enhanced Scene
Automating Enhanced Scene Context Application Using User-defined Attributes
Saving an Enhanced Scene in ENOVIAVPM
Exiting Enhanced Scene Context

About Enhanced Scenes

Enhanced Scenes will extend the limited capabilities of Old Scenes. It will now be possible to create and edit applicative data.

Enhanced Scenes

An Enhanced Scenes can be seen as a snapshot of an assembly in a defined state.

An Enhanced Scene corresponds to an assembly with specific component positions and specific attributes. It enables you to overload the following attributes:

- Component Positioning (using compass manipulation, snap or explode commands)
- Component Graphical attributes (color, transparency, line type, line thickness)
- Node Activation state
- Component Hide / show state
- Viewpoint

One of the major benefits of Enhanced Scenes is that the applicative data container will be available and functionalities associated with the applicative data will also be available in Enhanced Scene context.

It will be possible to generate Enhanced Scenes from Old Scenes.

Overloading of attributes (graphical, show / no show state, etc.) is limited to Products, i.e. these modifications are not replicated between scene and assembly for Products, however, for parts, models and manikins these modifications will be replicated (modifications on parts, models and manikins are always replicated in both directions).

Overload Modes in Enhanced Scenes

When you work in Enhanced Scenes, there are two Overload Modes, Full and Partial.

Overload Mode Full

- When you create a Enhanced Scene in Overload Mode Full, all attributes are immediately considered overloaded.
- All subsequent modifications to the Assembly will have no impact on the Enhanced Scene and vice-versa.
- If you choose to apply the Enhanced Scene context on the Assembly or to apply the Assembly context on the Enhanced Scene, after the operation, all attributes will still be considered overloaded and subsequent modifications to either the Enhanced Scene or the Assembly will continue to be independent, one from the other.

Overload Mode Partial

- When you create a Enhanced Scene in Overload Mode Partial, by default, none of the attributes are considered overloaded.
- Modifications to the Assembly will impact those attributes of the Enhanced Scene that are not overloaded (so, for example, if you make some modifications to the Assembly immediately following the Enhanced Scene creation, all of these modifications will impact the Enhanced Scene).
- Modifications to the Enhanced Scene never impact the Assembly, the result of such modifications to the Enhanced Scene is to overload the modified attributes.
- Attributes in the Enhanced Scene are overloaded implicitly when you modify the attribute in Enhanced Scene context.

  Graphical attributes, activation state, hide / show state, and viewpoint, once modified in the Enhanced Scene, will be considered overloaded. The overloaded values do not impact the Assembly. These overloaded attributes will subsequently be independent from the Assembly, i.e. modifications to the corresponding attributes in the Assembly will not impact the values of the attributes in the Enhanced Scene.

  Position attributes are implicitly overloaded when modified in the Enhanced Scene, however, you can also overload them explicitly by selecting the components for which you wish to overload the position and then clicking the Overload Position icon in the Enhanced Scenes toolbar (see Overloading Product Attributes in Enhanced Scene Context).

- If you choose to apply the Enhanced Scene context on the Assembly or to apply the Assembly context on the Enhanced Scene, after the operation, those attributes that were considered overloaded will continue to be considered so (even though they may momentarily have the same value as the corresponding attribute in the Assembly).

  Subsequent modifications of these overloaded attributes in either the Enhanced Scene or the Assembly will continue to be independent, one from the other.

  Subsequent modifications to the Assembly of those attributes that are not considered overloaded will continue to impact the Enhanced Scene.

Applicative Data Available in Enhanced Scene Context

The following applicative data are available in the Enhanced Scene context:

- Annotated Views
- 3D Annotation
- Hyperlinks
- Group
- Cumulative snap
- Reset position
- Init position
- Current selection
- Applicative data reordering
- Apply material
- Publish
- Camera
- Cache content
- Modify sag
- DMU Move

- Measure
- Section
- Clash
- Rendering lights
- Rendering Environments

Note: The automatic update of Enhanced Scene associated applicative data is managed by a variable in the DMU Navigator Settings. See *Customizing DMU Navigator Settings*.

The Assembly is the Reference for Enhanced Scene Creation

Enhanced Scene creation always uses the Assembly as the reference. In Overload Mode Partial, any modifications to attributes in the Assembly will affect every Enhanced Scene that does not overload those attributes.

Therefore, the command Apply Scene on Assembly will affect all of the Enhanced Scenes with Overload Mode Partial that have not overloaded the attributes corresponding to those that will be updated in the Assembly.

Propagation of Overloaded Attributes in Enhanced Scene Context

The propagation of attributes in Enhanced Scene context will work exactly as in Assembly context. Note, however, that the propagation of the value of a Product's overloaded attribute to its children will not cause the child Product's attribute to be considered overloaded, with the exception of hide/show, for which all children of a hidden attribute will also be hidden.

Save Command in Enhanced Scene Context

The Save command will be enabled in Enhanced Scene context, but you should be warned that it is the Assembly that will be saved (it will be the equivalent of doing **Exit Scene** + **Save** in Assembly context + Double-clicking the Enhanced Scene in the specification tree to re-enter the Enhanced Scene).

Restrictions

- In Enhanced Scene context, only products can be UI-Activated.
- Enhanced Scene context is NOT intended for assembly edit (add part, delete part, geometry modification), its intent is strictly review-oriented.

Creating an Enhanced Scene

Enhanced Scenes enable you to work on an alternative state of a product.

Insert the following GARDENA model documents from the cfyug samples folder:

GARDENAATOMIZER.model
GARDENABODY12.model
GARDENABODY22.model
GARDENALOCK.model
GARDENANOZZLE12.model
GARDENAREGULATOR.model
GARDENATRIGGER.model
GARDENAVALVE.model
GARDENA_NOZZLE22.model
GARDENA_REGULATION_COMMAND.model

1. In the specification tree, select the products of the Assembly that will define the Enhanced Scene content.

Selecting Enhanced Scene Content

Note that there are three ways to select Enhanced Scene content:

- No selection: the entire Assembly will appear in the Enhanced Scene
- One or more products selected (a subset of the Assembly): only the components in the branches leading back to the Assembly root of these selected products will appear in the Enhanced Scene
- An existing Scene selected (Enhanced Scene or Old Scene): the new Enhanced Scene will be a copy of the selected one

If only a subset of the Assembly is selected, the Enhanced Scene will contain only the selected products and their components. Regardless of the level of the selected products, the branches leading back to the Assembly root will be displayed in the Enhanced Scene tree and all representations in the branches will appear in the Enhanced Scene.

2. In the **DMU Review Creation** toolbar, click the Enhanced Scene icon .
   The **Create Scene** dialog box appears.

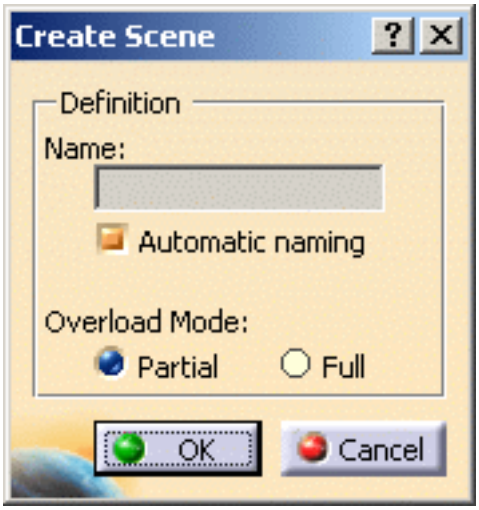

3. To define the name of the Enhanced Scene, click the **Automatic naming** radio button to deselect it and enter the name in the **Name** text-entry field.

   Note: Automatic naming enables you to automatically attribute names to Enhanced Scenes of the form Scene.1, Scene.2, Scene.3, etc. (The automatic naming mechanism is National-Language Supported.)

4. To define the **Overload Mode**, click the **Partial** radio button or click the **Full** radio button.

   Overload Mode Partial: The scene will only overload attributes for a few products and modifications to the main assembly of those attributes not overloaded in the scene will impact the scene. **Overload Mode Partial favors performance as long as you don't overload too many attributes**. An Enhanced Scene created with Overload Mode Partial will be indicated in the specification tree by the symbol .

   Overload Mode Full: All attributes supported for overloading of each element of the assembly (under the products selected at scene creation) will be overloaded by the scene. Products overloaded by the scene will henceforth **not** be impacted by modifications to the main assembly regarding attributes supported for overloading. **Overload Mode Full favors Enhanced Scene independence from the Assembly**. An Enhanced Scene created with Overload Mode Full will be indicated in the specification tree by the symbol .

Once the scene is created, it is not possible to change the overload mode; nevertheless, it is possible to create a new Enhanced Scene from an existing Enhanced Scene and to affect a different overload mode to the new Enhanced Scene at its creation.

5. Click **OK** to validate.

   The Enhanced Scene is created.

   The Enhanced Scene appears. A background (the color of which you define in the Tools -> Options -> DMU -> DMU Navigator settings) indicates that you are now in Enhanced Scene context. The **DMU Scenes** toolbar appears.

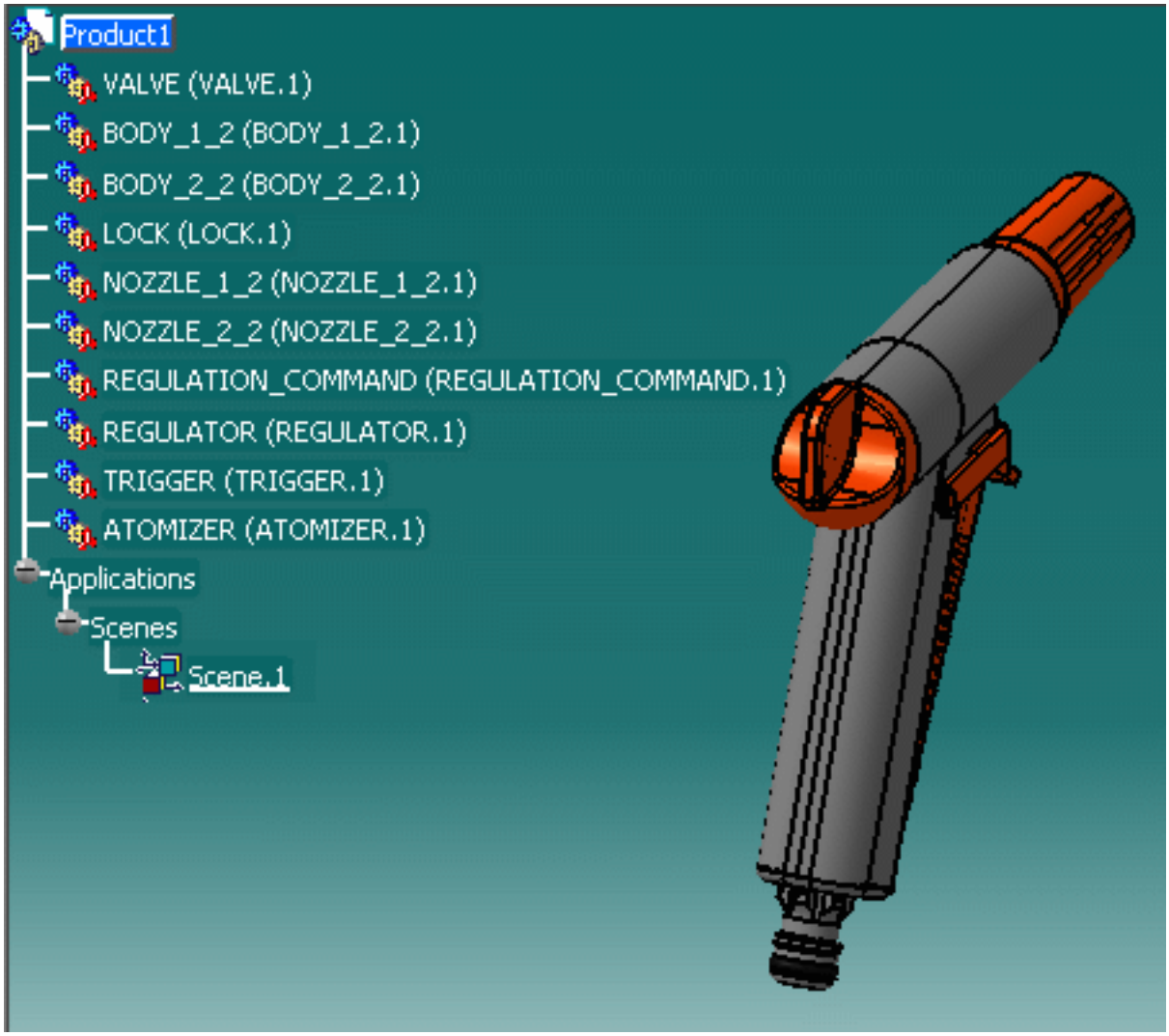

Applicative Data in Enhanced Scene Context

If the Assembly from which the Enhanced Scene was created had an Applicative Data container, this container will also be available in the Enhanced Scene. You will be able, therefore, to modify the existing applicative data and to create new applicative data.

Enhanced Scene Contextual Menu

The Enhanced Scene contextual menu is composed of the following commands:

Contextual Menu Entry	Action
Definition	activates the Enhanced Scene
Check Position	highlights all components for which the position attribute is different from the corresponding Assembly position attribute (see Checking Component Position)
Save Viewpoint	overloads the viewpoint attribute with the current viewpoint (see Saving a Viewpoint in New Scene Context)
Exit Scene	exits the Enhanced Scene and return to Assembly context
Apply Scene on Assembly	applies the overloaded attributes of the Enhanced Scene context on the Assembly (see Applying a Enhanced Scene Context to an Assembly)
Apply Assembly on Scene	applies the attributes of the Assembly context on the New Scene (see Applying an Assembly Context to a Enhanced Scene)

In Assembly context, the available commands are:

- Definition
- Apply Scene on Assembly
- Apply Assembly on Scene

In Enhanced Scene context, when right-clicking an inactive Enhanced Scene, the available command is:

- Definition

In Enhanced Scene context, when right-clicking the active Enhanced Scene, the available commands are:

- Definition
- Apply Scene on Assembly
- Apply Assembly on Scene
- Check Position
- Save Viewpoint
- Exit Scene

Generating an Enhanced Scene from an Old Scene

There is currently no formal process for automatically converting Old Scenes to Enhanced Scenes. The available solution consists of selecting the Old Scene in the specification tree and then creating an Enhanced Scene.

You have created an Old Scene in which you've modified one or more attributes (e.g. you've modified the color of one of the components and you've modified the viewpoint of the Old Scene).

1. Open the GardenaScene.CATProduct.
2. In the Specification Tree, select the Old Scene.
3. In the **DMU Review Creation** toolbar, click the Enhanced Scene icon and create the Enhanced Scene with the name and overload mode of your choice (see Creating an Enhanced Scene).

   Once created, the Enhanced Scene will be displayed and its state (the value of all possibly overloaded attributes) will be the same as that of the Old Scene from which it was created.

If you have chosen Overload Mode Partial, each attribute in the Enhanced Scene which is different from the corresponding attribute in the Assembly will now be considered overloaded.

The Old Scene will not be destroyed.

The Old Scene and the Enhanced Scene will be independent one from the other.

Scripts can be written using VBScript for generating Enhanced Scenes from Old Scenes.

Browsing Enhanced Scenes using the Scenes Browser

You can browse your Enhanced Scenes visually using the Scenes Browser. Appropriate customization of the Scenes Browser settings enables you to:

- activate a scene by simply double-clicking its image
- apply a scene to the assembly by simply double-clicking its image

1. In the **DMU Review Navigation** toolbar, click the **Scenes Browser** icon .
   The Scenes Browser appears. An image representation of all defined Enhanced Scenes associated to the current Assembly will be found in the Scenes Browser.

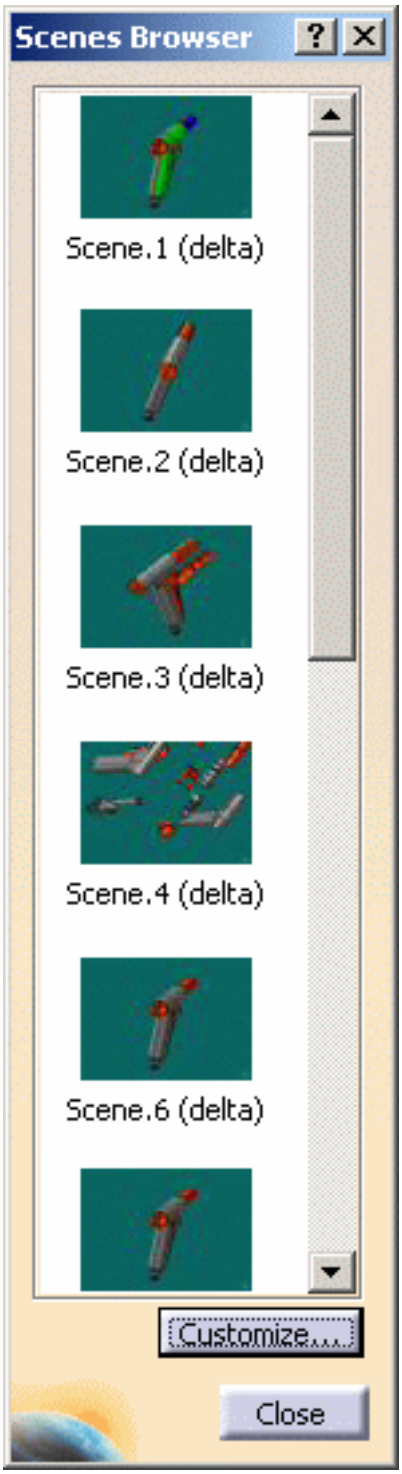

Customizing double-click behavior in the Scenes Browser

2. In the **Scenes Browser**, click the **Customize** button.

3. Check the radio button corresponding to the desired double-click behavior:

- double-clicking will activate the Enhanced Scene
- double-clicking will apply the whole Enhanced Scene to the Assembly

4. Click **OK** to validate.

Implementing the chosen behavior (Activating an Enhanced Scene or Applying an Enhanced Scene to the Assembly)

5. In the **Scenes Browser**, double-click the image of an Enhanced Scene to implement the chosen behavior.

The Enhanced Scene title associated to each image in the Scenes Browser also indicates whether the Enhanced Scene was created with overload mode Partial or Full.

Activating an Enhanced Scene

An Enhanced Scene can be activated at any time by simply double-clicking its entry in the Specification Tree.

1. In the Specification Tree, expand the Applications node and then expand the Enhanced Scenes node.

   A list of all Enhanced Scenes will be displayed.

2. In the Specification Tree, double-click the entry of the Enhanced Scene you wish to activate.

   The Enhanced Scene will be displayed.

   The background color will change to indicate that you are in Enhanced Scene context.

Even if you are working in Enhanced Scene context, you can activate a different Enhanced Scene by double-clicking its entry in the Specification Tree.

It is also possible to activate an Enhanced Scene by right-clicking it in the Specification Tree and selecting **Scene.X object -> Definition** in the contextual menu.

Exploding an Assembly

You can explode a product in New Scene context without affecting the original product.

You've created an Enhanced Scene.

1. Double-click Scene.1 either in the specification tree or in the geometry area.

   The context is changed to the Enhanced Scene context.

2. Select **Product.1** and click the **Explode** icon .

   The **Explode** dialog box appears.

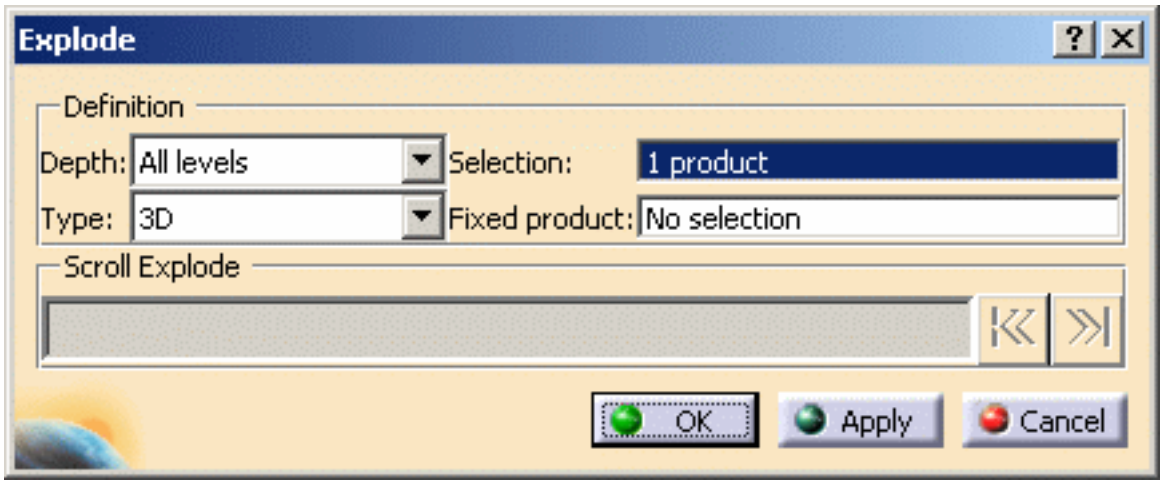

   Note that if the assembly is assigned coincidence constraints (axis/axis, plane/plane), the Explode can take these constraints into account by use of the Explode type "Constrained".

3. Click the **Apply** button.

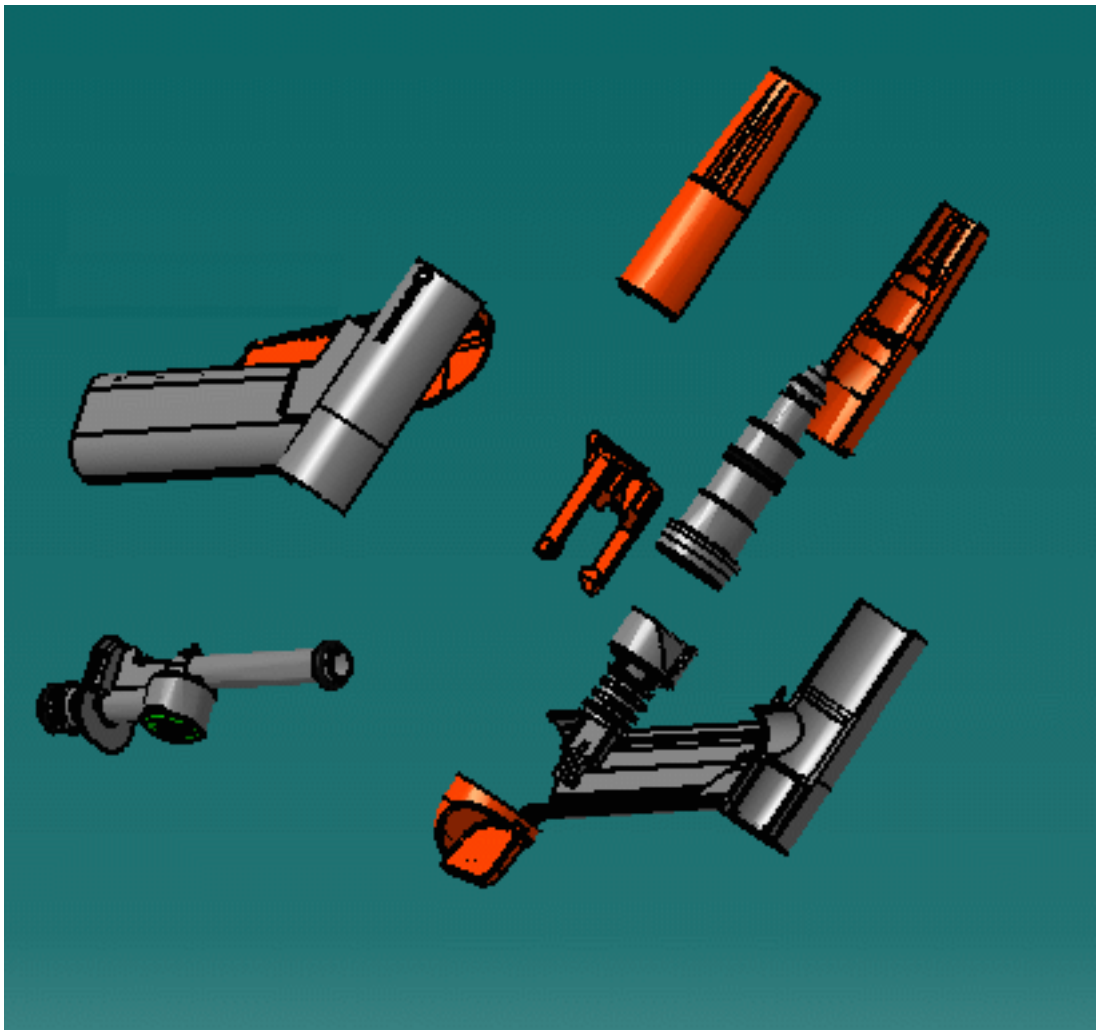

4. Click the **Exit Scene** icon to swap to Assembly context.

For more details about explode functionality, see the *DMU Fitting Simulator User's Guide*.

Overloading Product Position in Enhanced Scene Context

Overloading product position enables you to declare independence for the positioning of products in an Enhanced Scene with respect to the positioning of that same product in the Assembly.

Overload Mode Impact on Component Positioning

In Overload Mode Partial, repositioning a product in Enhanced Scene context will implicitly overload the position attribute. However, if a modification was first made to the product position in the Assembly, the position would be modified correspondingly in the Enhanced Scene since the position attribute would not have been overloaded.

1. Either in the specification tree or in the geometry area, select the products for which you wish to overload the position attribute.

   The selected components are highlighted in both the specification tree and the geometry area.

2. Click the Overload Positions icon .

   The position attributes of the selected products are now considered overloaded and will be independent from positioning modifications to the Assembly.

When you overload the product position attribute using this command:

- all child product position attributes will also be overloaded
- all ancestor product position attributes will also be overloaded

When you use move a product in Enhanced Scene context:

- the moved product's position attribute will be overloaded
- all ancestor product position attributes will also be overloaded

Adding, Replacing and Deleting Components in the Assembly

This task shows you how an Enhanced Scene is affected when you add, replace and delete components in the Assembly.

The Add, Replace and Delete functionalities are not available in Enhanced Scene context, only in Assembly context.

Insert the following sample model files in the cfyug samples folder:

- ATOMIZER
- BODY1
- BODY2
- LOCK
- REGULATOR
- TRIGGER
- VALVE
- REGULATION_COMMAND

1. Click the **Enhanced Scene** icon and create an Enhanced Scene.

You are now in a scene window.
The background color has turned to green and Scene.1 is added in the specification tree.

2. Click the **Exit Scene** icon to swap to the main window.

   You return to Assembly context.

Adding Components in the Assembly

In Overload Mode Full, components added in Assembly context will have not appear in the Enhanced Scene.

In Overload Mode Partial, the behavior will be as described below.

You will now add the NOZZLE:

3. Right-click **Product1** in the specification tree and select **Components -> Existing Component**.

4. Shift-select **NOZZLE1.model** and **NOZZLE2.model** and then click **Open**.

   The added components (NOZZLE_1 _2 and NOZZLE_1_2) are identified in the specification tree and added in the geometry area.

5. In the specification tree, double-click **Scene.1** to swap to the Enhanced Scene context.

   The newly-added components will appear in the specification tree and in the geometry area, assuming that, when they were added in the Assembly, they were added under the node that was selected for the creation of the Enhanced Scene. Otherwise, they will not appear.

For example, given the following Assembly configuration,

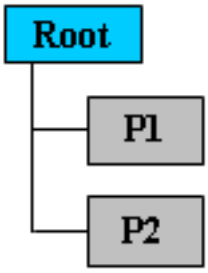

if you created an Enhanced Scene that contained only product P1 and you add a product under product P1 in the Assembly, then the added product will appear under P1 in the Enhanced Scene. However, if you add a product under the Root in the Assembly, it will not appear in the Enhanced Scene.

6. Click the **Exit Scene** icon to return to Assembly context.

Replacing Components in the Assembly

7. Replace, for example, the **BODY1** in the Assembly with the **BODY2.model** (right-click **BODY1** in the specification tree, select **Components -> Replace Component** from the contextual menu, then, in the **File Selection** dialog box, select **BODY2.model** and click **Open**.)

The Assembly is updated accordingly.

8. Double-click **Scene.1** in the specification tree to enter the scene.
   Scene.1 has been updated in the same manner as the Assembly, assuming that the replaced product was previously visible in the Enhanced Scene.

9. Click the **Exit Scene** icon to return to Assembly context.

Deleting Components from the Assembly

10. Delete, for example, the **BODY2** from the Assembly (right-click it in the specification tree and select **Delete** from the contextual menu.)
    The Assembly is updated accordingly.

11. Double-click **Scene.1** to enter the Enhanced Scene.
    Scene.1 has been updated in the same manner as the Assembly, assuming that the deleted product was previously visible in the Enhanced Scene.

Checking Component Position

This task shows you how to reset and check component position.

You've created an Enhanced Scene in which you've modified the position attributes.

1. Double-click Scene.1 either in the specification tree or in the geometry area.

   The context is changed to the Enhanced Scene context.

2. In the specification tree, right-click Scene.1 and select **Scene.1 object -> Check Position**.

   All moved items are highlighted in the specification tree and in the geometry area.

To reset the position of the moved items, see Applying an Assembly Context to an Enhanced Scene.

Saving a Viewpoint in Enhanced Scene Context

This task shows you how to save a viewpoint in Enhanced Scene context.

You've created an Enhanced Scene.

1. Modify the viewpoint of the Enhanced Scene.
2. In the **Enhanced Scenes** toolbar, click the **Save Viewpoint** icon .
3. Click the **Exit Scene** icon to return to the initial document window.
   You return to the main window.
4. Double-click Scene.1 either in the specification tree or in the geometry area to swap to the scene window.
   The viewpoint you saved is now taken into account in the Enhanced Scene.

Creating an Enhanced Scene Macro

If you perform a task repeatedly, you can take advantage of the macro mechanism to automate it. A macro is a series of functions, written in a scripting language, that you group in a single command in order to perform the requested task automatically.

This task will show you how to create an Enhanced Scene macro.

You stored your recorded macros in a text format file. For more detailed information about macros, see *Recording, Running and editing Macros* in the *Infrastructure User's Guide*.

Here is an example of an Enhanced Scene macro in which you create a Enhanced Scene:

```
' COPYRIGHT DASSAULT SYSTEMES 2003
Option Explicit

' ************************************** **************
' Purpose: Create two new scenes.
' Assumptions: A CATProduct document should be active.
' Languages: VBScript
' Locales: English
' CATIA Level: V5R12
' ******************************************************

Sub CATMain()

' Get the root of the CATProduct
Dim RootProduct As Product
Set RootProduct = CATIA.ActiveDocument.Product

' Retrieve the ProductScenes collection
Dim TheScenes As ProductScenes
Set TheScenes = RootProduct.GetTechnologicalObject("ScenesCollection")

' Create a FULL product-scene on Root-Product
Dim xProducts1(0)
Set xProducts1(0) = RootProduct
Dim oScene1 As ProductScene
Set oScene1 = TheScenes.AddProductSceneFull ("", xProducts1)

' Create a PARTIAL product-scene on Root-Product with "PartialScene" persistent name
Dim xProducts2(0)
Dim oScene2 As ProductScene
Set oScene2 = TheScenes.AddProductScenePartial ("PartialScene", xProducts2)

End Sub
```

- **Create the scene** launches the scene creation.
- **Scene1** corresponds to the to-be-created scene.
- **RootProduct** corresponds to Product1.

Applying an Enhanced Scene Context to an Assembly

The command Apply Scene to Assembly enables you to reset the values of selected attributes of the Assembly with the values of the corresponding overloaded attributes in the Enhanced Scene.

You've created an Enhanced Scene in which you've modified at least one of the following:

- component position
- component hide / show status
- component graphical properties
- component activation status

Enhanced Scene creation always uses the Assembly as the reference. Therefore, the command Apply Scene on Assembly will affect all of the Enhanced Scenes with Overload Mode Partial that have not overloaded the attributes corresponding to those that will be updated in the Assembly.

1. Double-click Scene.1 in the specification tree to activate the Enhanced Scene
2. Click the **Apply Scene on Assembly** icon .

   The **Apply Scene.1 on Assembly** dialog box is displayed.

   All differences between the Assembly and the Enhanced Scene are indicated by an "X" in the dialog box.

You can also access the Apply Scene on Assembly command by right-clicking Scene.1 in the specification tree and selecting **Scene.1 object -> Apply on Assembly** in the contextual menu.

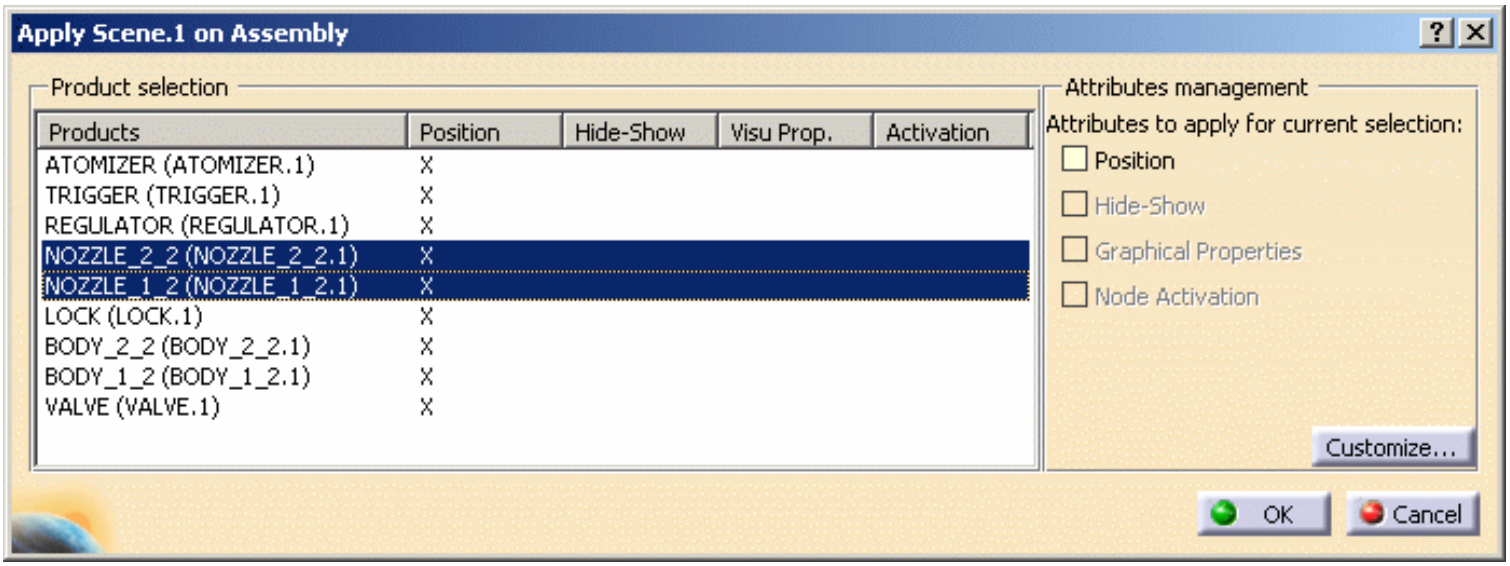

3. Select the products for which you wish to apply modifications.

   The rows corresponding to the products will be highlighted.

   In the **Attributes management** area, the attribute types that could potentially be applied as a function of the selected products will be un-grayed (in the above example, only the Position attribute has been modified for the selected products, so only the Position attribute type has been un-grayed).

4. In the **Attributes management** area, click the attribute types of the modifications you wish to apply.

The entry in the table of the corresponding modification will change from "X" to "Apply".

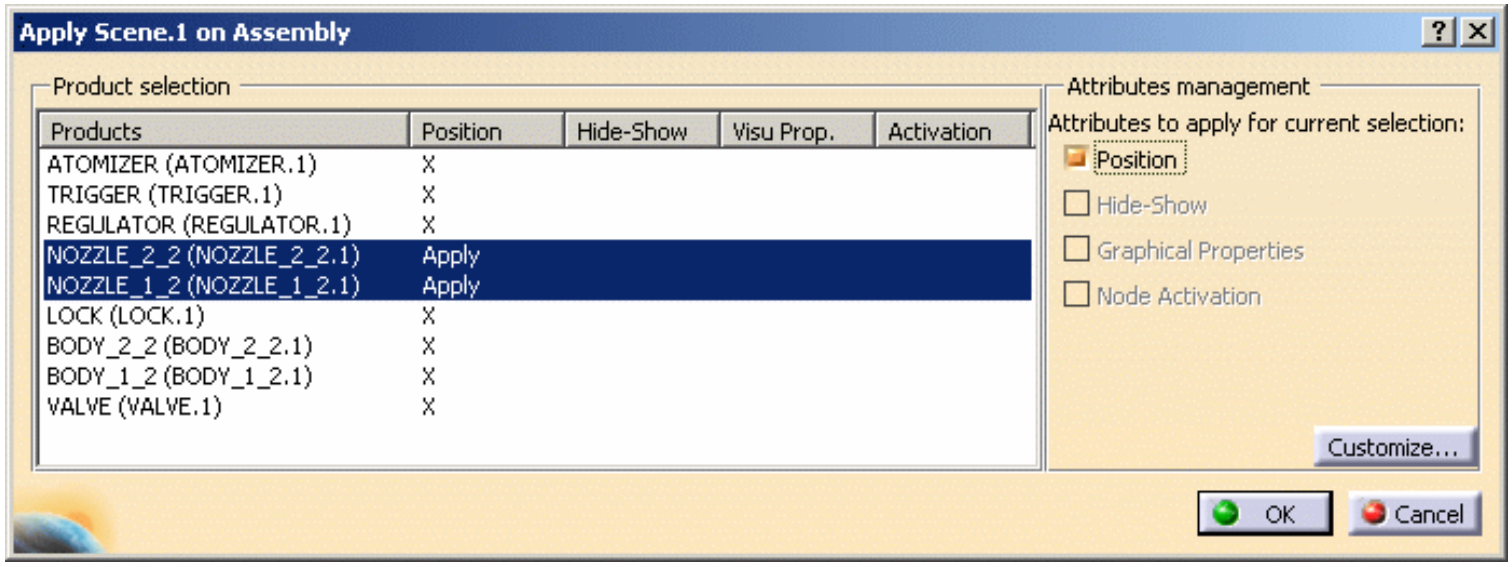

5. Click **OK** to validate.

Using the Contextual Menu

You can use the contextual menu to:

- select all product rows or to unselect all product rows
- designate selected attributes as "Apply" or "X" (Do not apply)

As an example:

- in step 3 above you would still select the product rows manually
- in step 4 above you would right-click the selection, which would display the following contextual menu (because only position attributes are potentially applicable from the Enhanced Scene onto the Assembly):

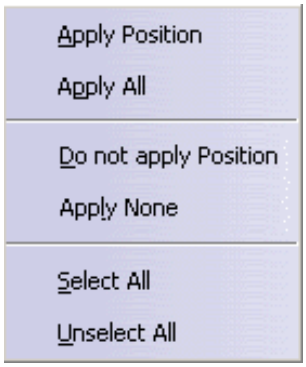

- you would select Apply Position (or Apply All) to designate the selected attributes to be applied:

Customizing Displayed Attributes

You can customize the list of attribute types displayed in the **Attributes management** area:

- click the **Customize** button
- deselect the attribute types you don't wish to appear in the list
- click **OK** to validate

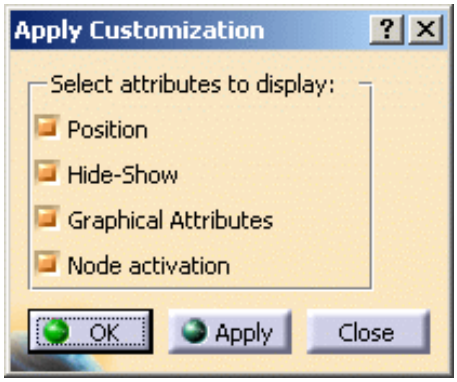

Applying an Assembly Context to an Enhanced Scene

The command Apply Assembly on Scene enables you to reset the values of selected overloaded attributes in the Enhanced Scene with the values of the corresponding attributes in the Assembly.

You've created an Enhanced Scene in which you've modified at least one of the following:

- component position
- component hide / show status
- component graphical properties
- component activation status

1. Double-click Scene.1 in specification tree to activate the Enhanced Scene.
2. Click the **Apply Assembly on Scene** icon .

   The **Apply main assembly on Scene.1** dialog box is displayed.

   All differences between the Assembly and the Enhanced Scene are indicated by an "X" in the dialog box.

You can also access the Apply Scene on Assembly command by right-clicking Scene.1 in the specification tree and selecting **Scene.1 object -> Apply on Scene** in the contextual menu.

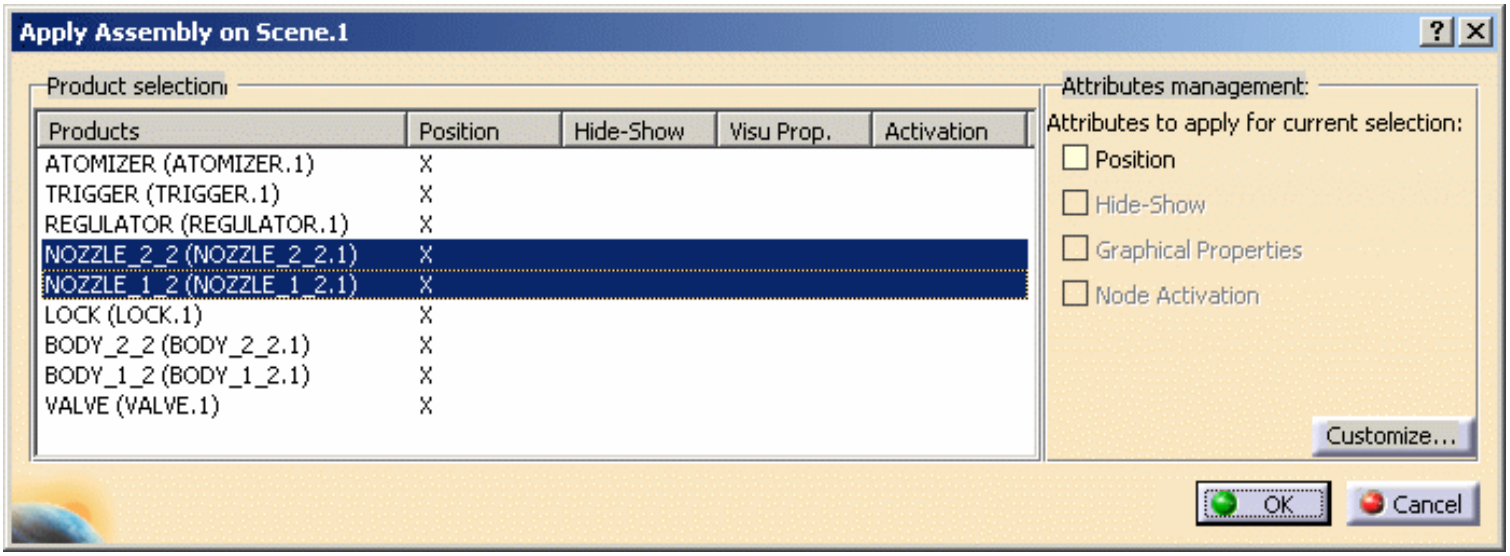

3. Select the products for which you wish to apply modifications.

   The rows corresponding to the products will be highlighted.

   In the **Attributes management** area, the attribute types that could potentially be applied as a function of the selected products will be un-grayed (in the above example, only the Position attribute has been modified for the selected products, so only the Position attribute type has been un-grayed).

4. In the **Attributes management** area, click the attribute types of the modifications you wish to apply.

   The entry in the table of the corresponding modification will change from "X" to "Apply" or vice-versa.

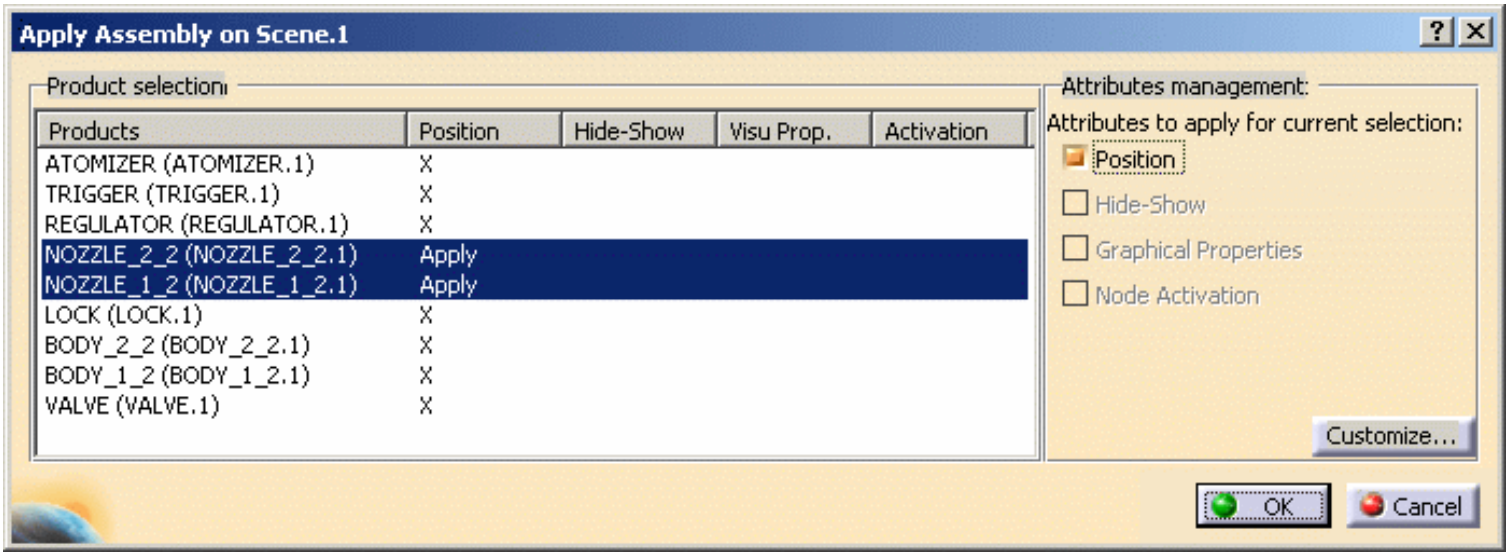

5. Click **OK** to validate.

You can use the contextual menu to:

- select all product rows or to unselect all product rows
- designate selected attributes as "Apply" or "X" (Do not apply)

As an example:

- in step 3 above you would still select the product rows manually
- in step 4 above you would right-click the selection, which would display the following contextual menu (because only position attributes are potentially applicable from the Assembly onto the Enhanced Scene):

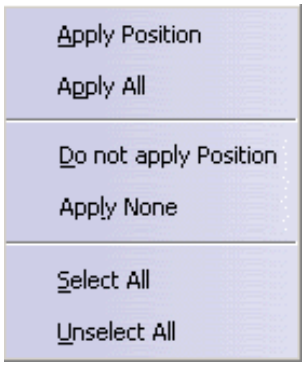

- you would select Apply Position (or Apply All) to designate the selected attributes to be applied:

You can customize the list of attribute types displayed in the **Attributes management** area:

- click the **Customize** button
- deselect the attribute types you don't wish to appear in the list
- click **OK** to validate

Automating Enhanced Scene Context Application Using User-defined Attributes

This command enables you to streamline the application of an Enhanced Scene context to an Assembly by allowing you to pre-define those attributes that you would like to apply by default and then allowing you to apply those attributes from a contextual menu.

You've created an Enhanced Scene in which you've modified at least one of the following:

- component position
- component hide / show status
- component graphical properties
- component activation status

Enhanced Scene creation always uses the Assembly as the reference. Therefore, the command Apply Scene on Assembly will affect all of the Enhanced Scenes with Overload Mode Partial that have not overloaded the attributes corresponding to those that will be updated in the Assembly.

1. In the specification tree, right-click Scene.1 and select **Scene.1 object -> Set User Defined Attributes** in the contextual menu.

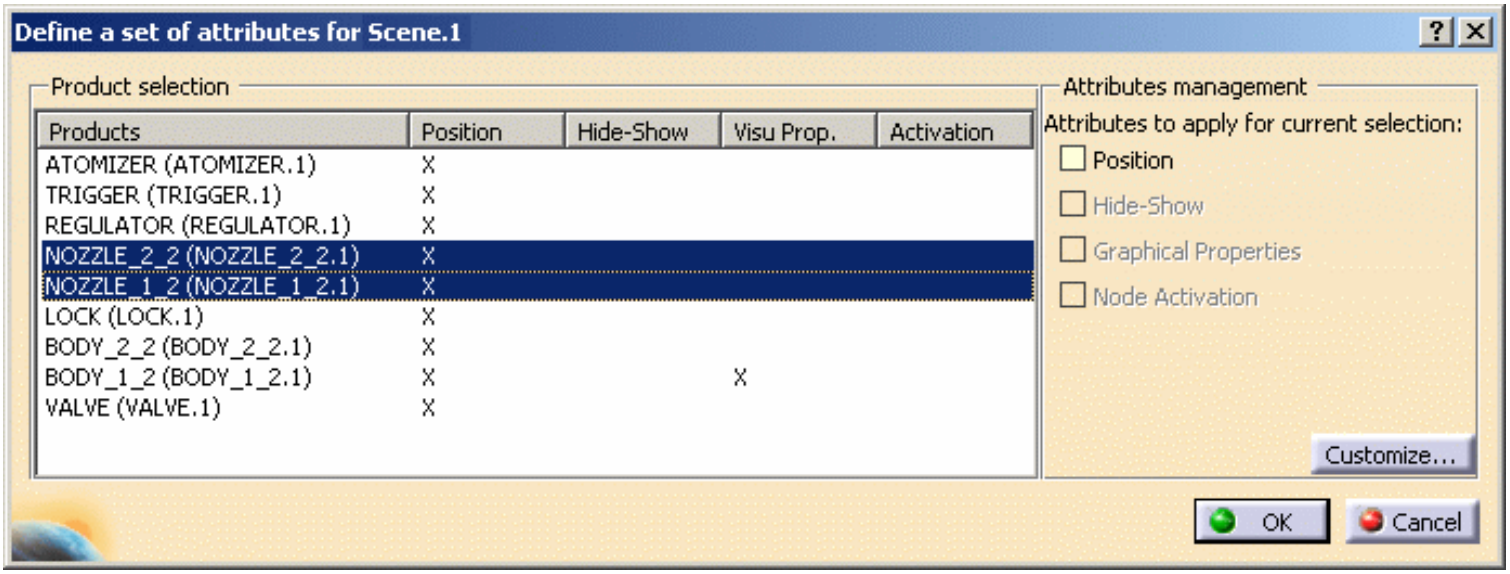

2. Select the products for which you wish to apply modifications.

   The rows corresponding to the products will be highlighted.

   In the **Attributes management** area, the attribute types that could potentially be applied as a function of the selected products will be un-grayed (in the above example, only the Position attribute has been modified for the selected products, so only the Position attribute type has been un-grayed).

3. In the **Attributes management** area, click the attribute types of the modifications you wish to apply.

   The entry in the table of the corresponding modification will change from "X" to "Lock".

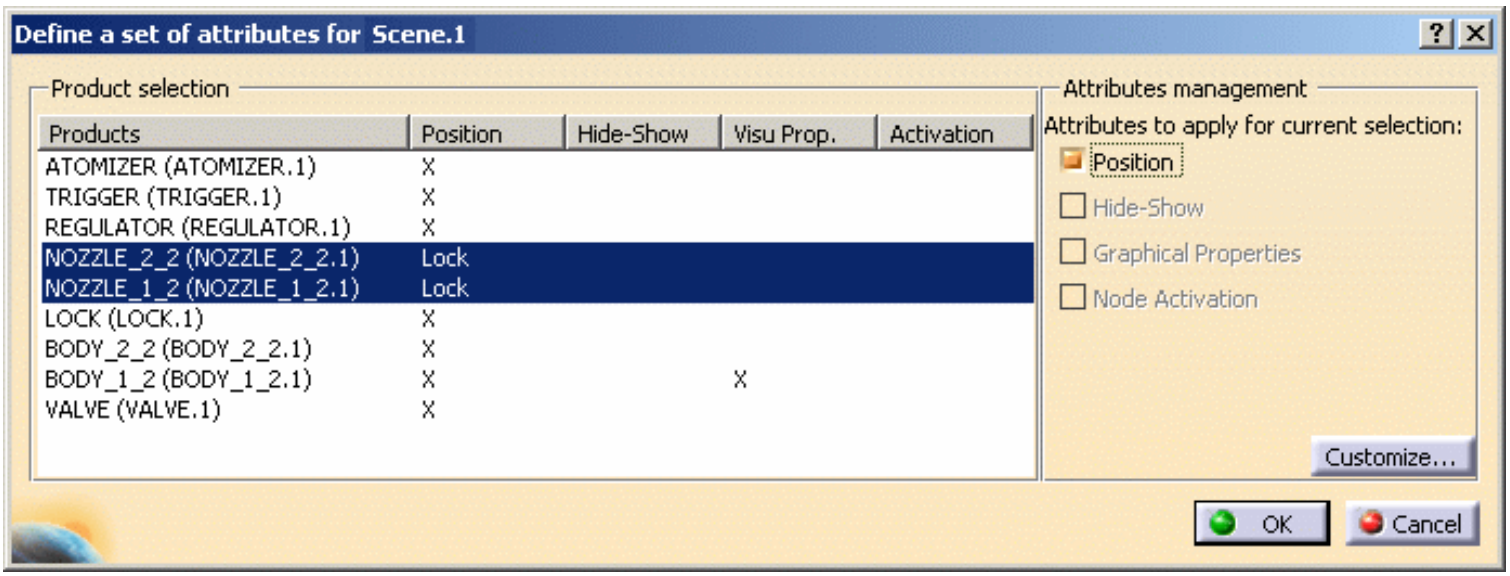

4. Click **OK** to validate.

The use of the contextual menu is the same as in Applying an Enhanced Scene Context to an Assembly.

The customization of displayed attributes in the dialog box is the same as in Applying an Enhanced Scene Context to an Assembly.

Saving an Enhanced Scene in ENOVIAVPM

Enhanced Scenes can be saved in ENOVIAVPM, but only in the context of a DMU Review. See *Saving DMU Applicative Data in ENOVIAVPM* in the *DMU Navigator User's Guide*.

The Enhanced Scenes saved in ENOVIAVPM cannot be used in a drafting scenario: it is not possible to create a drawing with a view from this scene.

Exiting Enhanced Scene Context

You can exit Enhanced Scene context and return to Assembly context at any time.

1. In **Enhanced Scenes** toolbar, click the **Exit Scene** icon .

   You exit the Enhanced Scene context.

   You will now be back in Assembly context.

All modifications to your Enhanced Scenes are implicitly persistent, with the exception of viewpoint modification (see Saving a Viewpoint in Enhanced Scene Context).

If you hide the **Enhanced Scene**s toolbar, you will automatically exit Enhanced Scene context.

Selecting Using a Filter

This task will show you how to manage and customize the sub-geometry selection in order to avoid any ambiguity.

The **User Selection Filter** toolbar is divided into two sections:

- The first section lets you filter elements according to their type:
  - point type.
  - curve type.
  - surface type.
  - volume type.
- The second section lets you filter elements according to their mode:
  - **Feature Element Filter** selects the whole feature whether it is a sketch, product, pad, join, etc.
  - **Geometrical Element Filter** enables to sub-elements of a feature such as faces, edges or vertices.

By default, all the icons are deactivated which means that no filter is applied but you can restrict the selection to specific element types by clicking the corresponding icons.

Bear in mind that:

- If you deselect a type, it cannot be selected in the geometry anymore unless all other types are deselected.
- If you deselect a mode, it cannot be selected anymore for each active type unless other modes are deselected.
- It is not possible to activate both filter modes simultaneously (it does not make sense anyway). Only two states are available: either Feature Element Filter or Geometrical Element Filter is activated or both modes are deactivated.

By selecting Assembly Design commands, some filtering types turn disabled because they are inconsistent according to the elements allowed in the command.

- You need to activate the **User Selection Filter** toolbar by selecting the **View -> Toolbars** command and clicking **User Selection Filter**.
- Open the Assembly_01.CATProduct document.

1. Click the **Coincidence Constraint** icon:

Note that the **Volume Type** icon is disabled according to the **Coincidence Constraint** specifications.

2. Click the **Surface Type** icon:

3. Drag the mouse over any surface assembly.

The cursor shape is modified when passing over a selectable element.

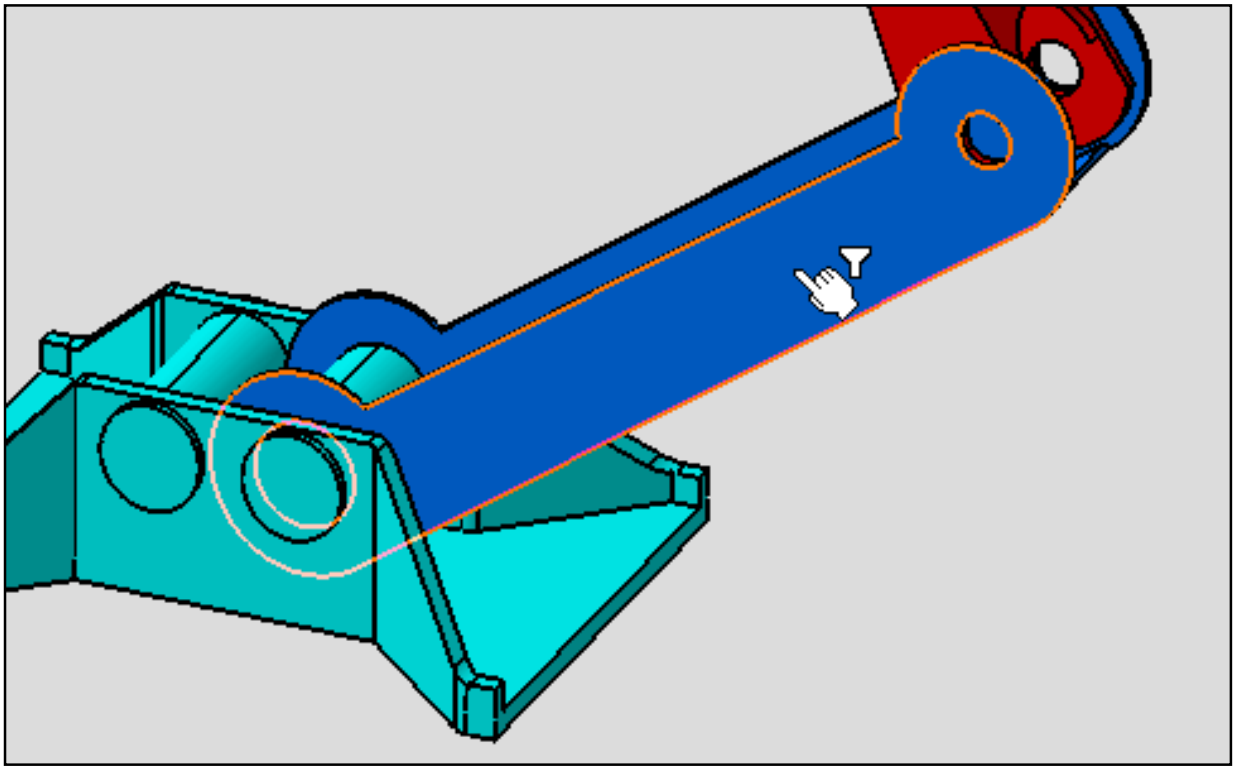

4. Un-click the **Surface Type** icon: and click **Curve Type** icon:

5. Drag the mouse over the same surface as previous.

The forbidden cursor appears when passing over a selectable element.

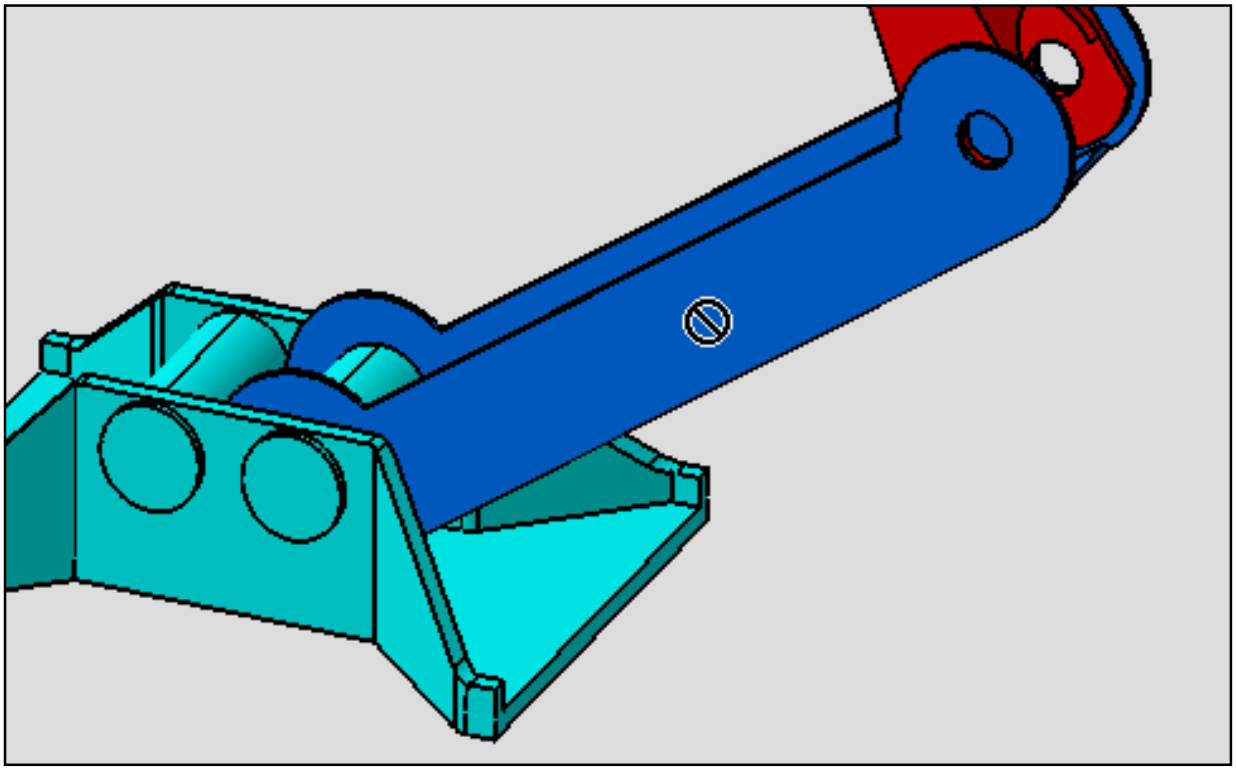

Interoperability

This section contains interoperability information about the Assembly Design workbench.

Opening a CATIA Version 4 Assembly Document
Optimal CATIA PLM Usability for Assembly Design

Opening a CATIA Version 4 Assembly Document

This task will show you how to open a asm document, that is a CATIA V4 assembly into Assembly Design workbench.

1. Click the **Open** icon:

   The **File Selection** dialog box appears.

2. In the **File Selection** dialog box, select the asm document of interest and click **Open**.

   The application converts the asm document into a CATProduct document. The new document has the same properties as the V4 document.

   However, if the name of the V4 document includes special characters, the application converts these characters into new ones according to the characters equivalence table. For more about this table, please refer to **Infrastructure User's Guide**.

   In our example, the CRIC product normally includes three sub-products (BRANCH, CRIC_SCREW and CRIC_FRAME), but the application informs us that these components could not be retrieved. As a consequence, geometry is not available and constraints appear as broken in the specification tree:

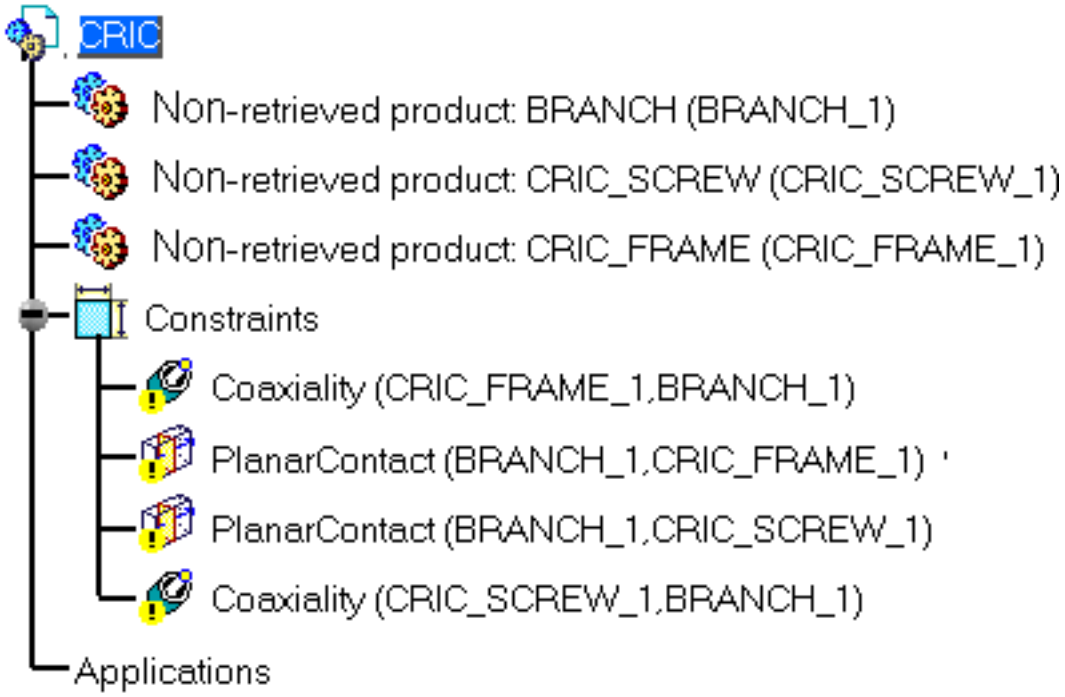

3. What you need to do is resolve the links to these documents. To do so, use the "Linked Document Localization" capability. To access it, select the **Tools->Options...** command then in the **General** category, click the **Document** tab. Proceed as explained in **Infrastructure User's Guide**.

Once the operation is done, you can reopen your asm document and note that the links are resolved.

You can then perform any operation you want. When saving this CATProduct document, you will not alter the original asm document

Optimal CATIA PLM Usability for Assembly Design

When working with **ENOVIA V5**, the safe save mode ensures that you only create data in **CATIA V5** that can be correctly saved in **ENOVIA V5**.

ENOVIA V5 offers two different storage modes: Workpackage (Document kept - Publications Exposed) and Explode (Document not kept). Assembly Design has been configured to work in the both mode.

Assembly Design Commands in Enovia V5

Please find below the list of the Assembly Design commands along with their accessibility status in Enovia V5.

Category	Command	Accessibility in Enovia V5	Comment
Product Structure	Product management	Available	None
	Component Degrees of freedom	Available	None
	Component constraints	Available	None
	Insert existing component with positioning	Available	None
	Multi-instantiation / fast multi-instantiation	Available	None
Assembly	Update	Available	None
	Apply material	Available	None
	Catalog browser	Available	None
	Mechanical standard parts	Available	None
	Convert product to CATPart	Available	None
Assembly Features	Local Update	Available	None
Constraints	Coincidence	Available	None
	Contact	Available	None
	Offset	Available	None
	Angle	Available	None

	Fix	Available	None
	Quick constraint	Available	None
	Change constraint	Available	None
	Default mode	Available	None
	Chain mode	Available	None
	Stack mode	Available	None
	Fix Together	Available	You cannot perform a fix together containing another fix together.
	Deactivate	Available	None
	Display with leader	Available	None
	Display without leader	Available	None
	Name Display	Available	None
	Value Display	Available	None
	Formula Display	Available	None
	Reorder constraints	Available	None
	Stack mode	Available	None
Space Analysis	Clash	Available	None
	Sectioning	Available	None
	Distance	Available	None
	Compute Clash	Available	None
	Measure Item	Available	None
	Measure between	Available	None
	Measure inertia	Available	None
Move	Manipulate	Available	None
	Smart Move	Available	None
	Snap	Available	None
	Translate / Rotate	Available	None
	Explode	Available	None
	Compass	Available	None
Analyze	Update	Available	None
	Constraints	Available	None

Degree of Freedom	Available	None
Dependencies	Available	None
Mechanical Structure	Available	None

Workbench Description

The **Assembly Design** workbench looks like this (move the mouse over image's links and have the enlarged image and corresponding description pop up):

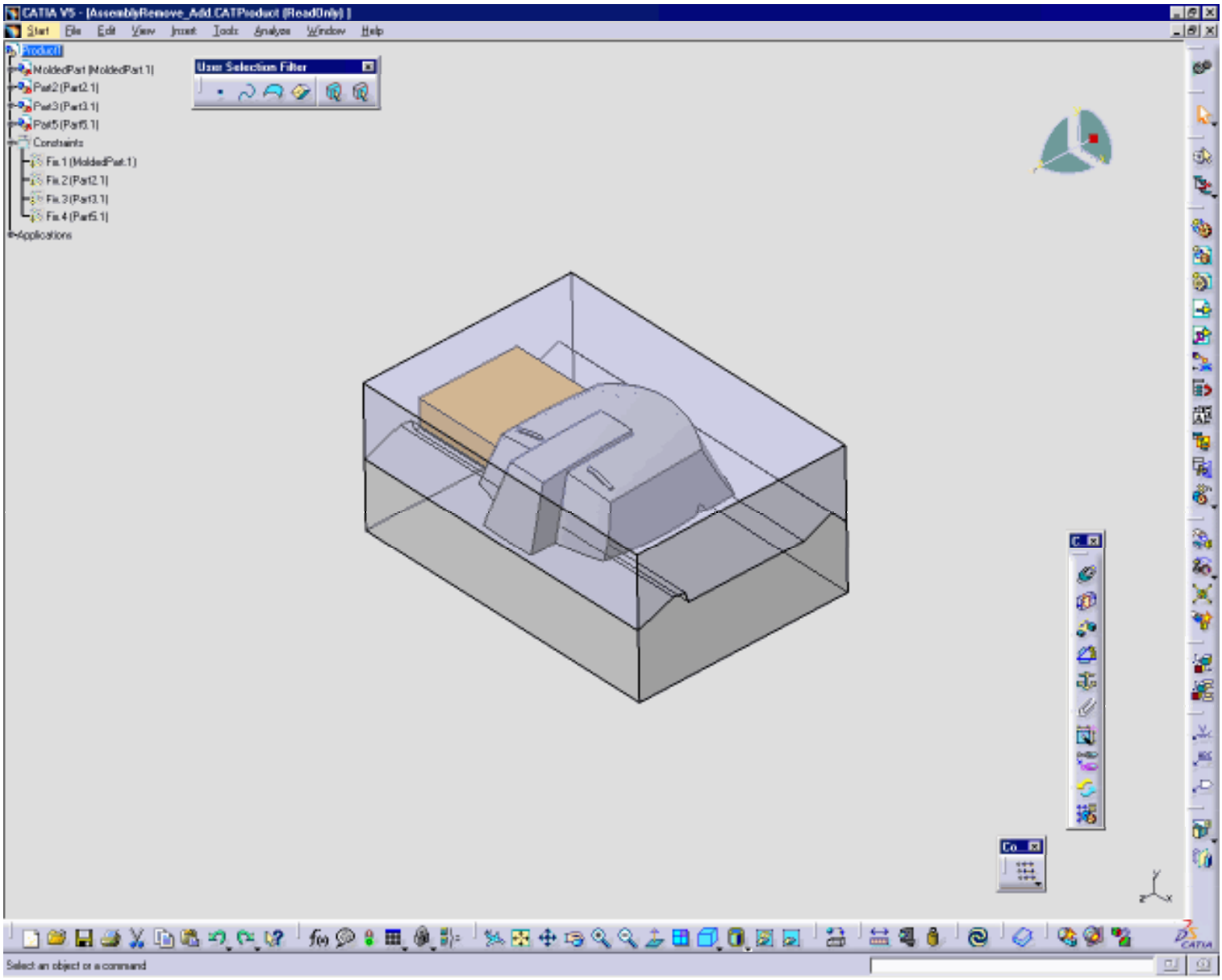

Assembly Design Menu Bar
Product Structure Tools Toolbar
Move Toolbar
Tools Toolbar
Constraints Toolbar
Assembly Features Toolbar
Annotations Toolbar
Space Analysis Toolbar
Scenes Toolbar
User Selection Filter Toolbar
Miscellaneous Symbols
Specification Tree
Symbols Reflecting an Incident in the Geometry Building
Referenced Geometry

Symbols Used in the Specification Tree

Miscellaneous Symbols
Product Structure
Symbols Reflecting an Incident in the Geometry
Referenced Geometry Symbols

Assembly Design Menu Bar

This section presents the main menu bar available when you run the application and before creating or opening a document:

Start	File	Edit	View	Insert	Tools	Analyze	Windows	Help

File

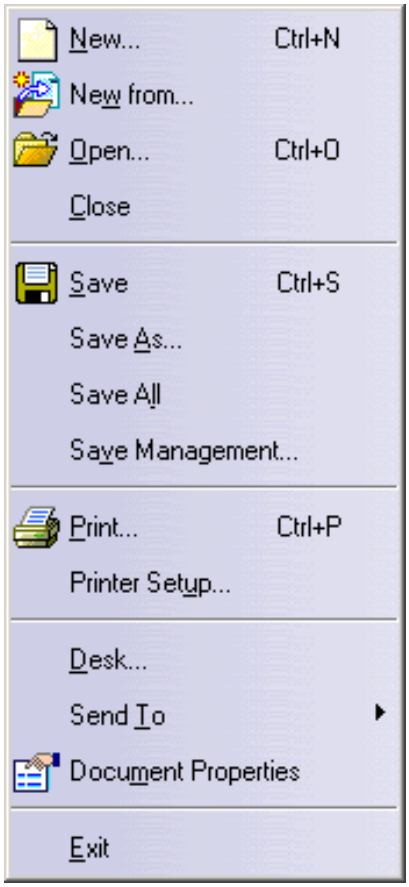

For...	See...
New	Creating a New Assembly Document

Edit

For...	See...
Update	Updating an Assembly
Move	Moving Components
Component Constraints	Selecting Constraints of Given Components
Properties	Modifying the Properties of a Constraint

Insert

For...	See...
Coincidence...	Creating a Coincidence Constraint
Contact...	Creating a Contact Constraint
Offset...	Creating an Offset Constraint
Angle...	Creating an Angle Constraint
Fix Together...	Fixing Components Together
Fix	Fixing a Component
Quick Constraint	Using the Quick Constraint Command
Reuse Pattern...	Using a Part Design Pattern
Document Template Creation...	Working with Interactive Templates
Create Scene	Creating an Enhanced Scene

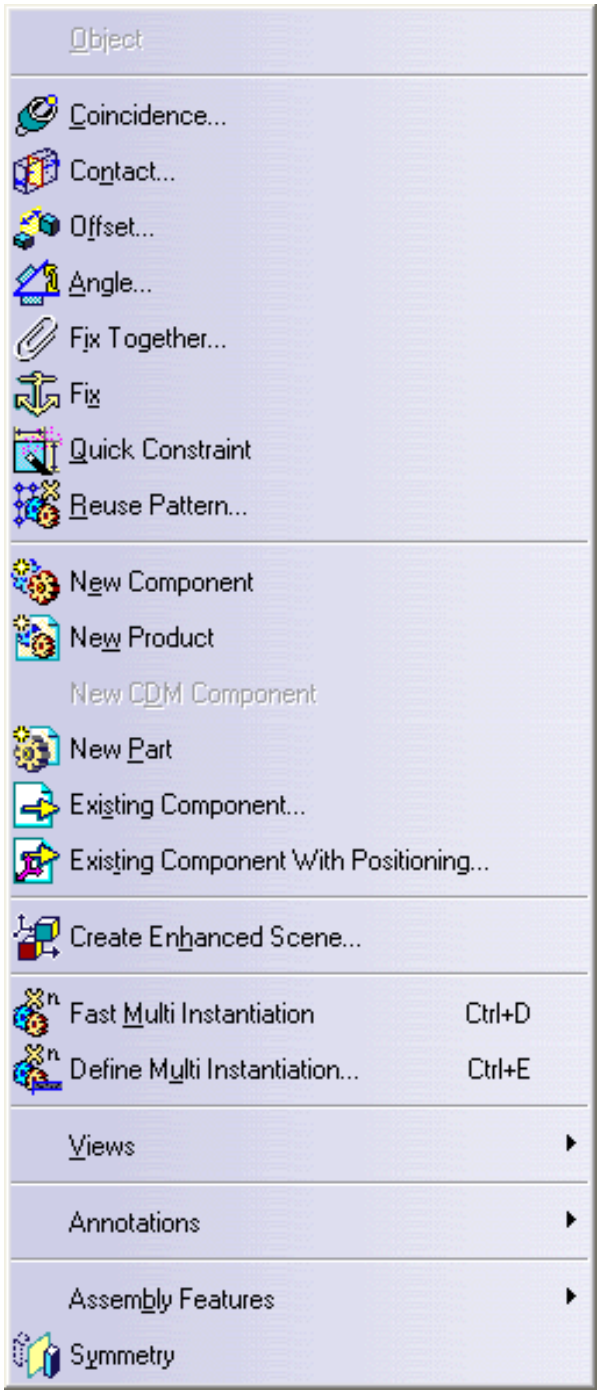

Fast Multi-Instantiation	Fast Multi-Instantiation
Define Multi-Instantiation	Defining a Multi-Instantiation
Views	Creating a Projection View, Creating a Section View, Creating a Section Cut
Annotations	Creating Annotations
Assembly Features	Assembly Features

Tools

For...	See...
Options...	Customizing
Product Management...	Managing Products in an Assembly
Publication...	Using a Standard Part Contained in a Parametric Standard Part Catalog
Generate CATPart from Product...	Generating CATPart from Product
Mechanical Standard Parts	Using a Standard Part Contained in a Parametric Standard Part Catalog

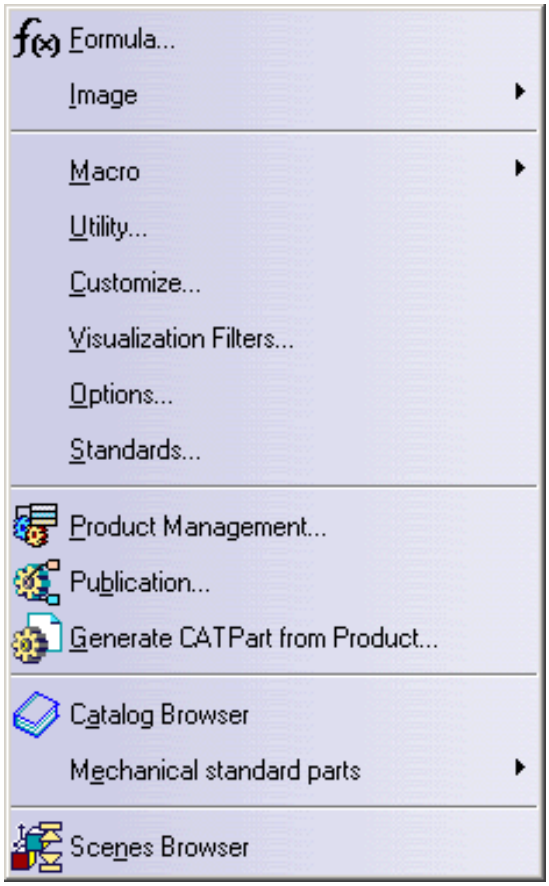

Scenes Browser	Browsing Enhanced Scenes using the Scenes Browser

Analyze

For...	See...
Update...	Analyzing Updates
Constraints...	Analyzing Constraints
Degrees of freedom...	Analyzing Degrees of Freedom
Dependencies...	Analyzing Dependences
Mechanical Structure...	Flexible Sub-Assemblies
Compute Clash...	Computing Clash between Components
Measure Item...	Measure Minimum Distances and Angles
Measure Between...	Measure Elements
Measure Inertia...	Measure Inertia
Clash...	Detecting Interferences
Sectioning...	Sectioning
Distance	Measuring Minimum Distances

Product Structure Tools Toolbar

See Fast Multi-Instantiation

Jump to Multi-Instantiation Sub-Toolbar

Multi-Instantiation Sub-Toolbar

See Defining a Multi-Instantiation

See Inserting an Existing Component with Positioning

Move Toolbar

See Translating Components or Rotating Components(P1 configuration)

See Manipulating Components

Jump to Supports Sub-Toolbar

See Exploding a Constrained Assembly

See Stop Manipulation on Clash

Snap Sub-Toolbar

See Snapping Components

See Smart Move or Smart Move with Viewer

Update Toolbar

See Updating an Assembly

Constraints Toolbar

See Creating a Coincidence Constraint

See Creating a Contact Constraint

See Creating an Offset Constraint

See Creating an Angle Constraint

See Fixing a Component

See Fixing Components Together

See Using the Quick Constraint Command

See Flexible Sub-Assemblies

See Changing Constraints

See Using a Part Design Pattern

Assembly Features Toolbar

Jump to Assembly Features Sub-Toolbar

See Performing a Symmetry on a Component

Assembly Features Sub-Toolbar

See Assembly Split

See Assembly Hole and Using Hole Series

See Assembly Pocket

See Assembly Add

See Assembly Remove

Annotations Toolbar

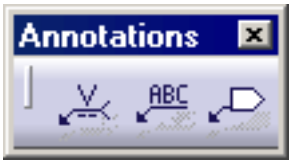

See Creating Weld Features

See Creating a Text With Leader

See Creating a Flag Note With Leader

Space Analysis Toolbar

See Detecting Interferences

See Sectioning

See Measuring Minimum Distances

Scenes Toolbar

See Creating an Enhanced Scene.

See Browsing Enhanced Scenes using the Scenes Browser.

User Selection Filter Toolbar

See Selecting Using a Filter

See Selecting Using a Filter

See Selecting Using a Filter

See Selecting Using a Filter

See Selecting Using a Filter

See Selecting Using a Filter

Miscellaneous Symbols

Miscellaneous

PartBody	A part body. You have access to the part's features, the way it is organized (Pad, Pocket, Intersection, etc.).
xy plane	xy plane, yz plane or zx plane. You can click the desired reference plane either in the geometry area or in the specification tree.
Point.1	Formula defined for Point.1. For more about formulas, please refer to *Infrastructure User's Guide Version 5*.
BODY1	A model with geometrical representation.
Sketch.1	Sketch. For more information about Sketcher Workbench, refer to : Entering the Sketcher Workbench in *Sketcher User's Guide*.
AbsoluteAxis	Absolute Axis: contains information about Origin, HDirection and VDirection.
Origin	Origin.
HDirection	HDirection or VDirection.

Geometry

Geometry (Point, Line,...): Wireframe and Surfaces features.

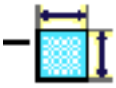 Constraints

Constraints: Parallelism, Perpendicularity, etc.

face

Publication : a CATPart or CATProduct element is published that is to say its geometrical data is exposed. For more information refer to Managing a Product Publication in *Assembly User's Guide*.

Assembly hole. For more about Assembly features, please refer to *Assembly Design User's Guide Version 5*.

Open_body.1

External references branch of the part : external geometry (a face, a point or a line) is copied/imported from driving parts to contextual parts that are being driven (Design in context). You can customize External References in **Tools -> Options -> Infrastructure -> Part Infrastructure**, select the **General** tab and check the box **Keep links with selected object**.

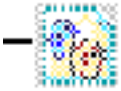 Product4

A product in NO SHOW. By clicking in the CATProduct's contextual menu or by using the Hide/Show icon , you can put the product in the SHOW or NO SHOW area, the product's geometry is hidden. As a consequence, the documents under it, for instance the CATPart is in the NO SHOW space as well.
For more information about the SHOW/NO SHOW modes, see Displaying Hidden Objects in *Infrastructure's User Guide*.

Part5

A part in NO SHOW.

The Sketcher symbol is by default in NO SHOW. By this means the geometry lighter. But you can reactivate the Sketcher representation by clicking in the contextual menu or by using the Hide/Show icon . By double-clicking on this symbol you can return into the Sketcher workbench.

Product Structure Symbols

Product Structure

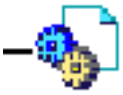
Product1

A product. For more information, refer to Insert a New Product in *Product Structure User's Guide*.

Product2

A component or sub-product. For more information, refer to Insert a New Component in *Product Structure User's Guide*.

Flexible_product

The purple little wheel to the left corner of the CATProduct icon and the light bar identify a flexible sub-assembly. For more information, refer to Soft Sub-Assemblies in *Product Structure User's Guide*.

Part.1

Instance of a part. This symbol means that there is a geometrical representation of the part and that it is activated.

Part_with_DeactivatedRepresentation

The representation of this part is deactivated. This symbol means the geometric representation is deactivated. Before opening a document, you choose the activate or deactivate Shape representation in **Tools->Options->Infrastructure**, select the Product Structure tab and check the box entitled **Do not activate default shapes on open**.
For a particular instance in the document, you can deactivate or activate it by selecting the **Representations -> Deactivate Node / Activate Node** contextual commands.

Component_with_DeactivatedRepresentation

The representation of this component is deactivated.

Contextual parts:

For contextual parts, the reference keeps a link with the Original or Definition Instance (or Original Part).

For each parts, every instance keeps a link with its reference. But the Contextual Reference (or Contextual Part) has only one link, with a single instance which is contextual. This unique link allows you to know the name of the document (CATProduct) on which the part 's external geometry rests.

There is a distinction between the Original Instance and the subsequent Contextual References because the geometrical definition of contextual Parts depends on neighboring components (support) in the Assembly. The Geometry of the Contextual Part depends on another instance in the same Assembly (second link).

Three Instances of Contextual Part exist:

_ Definition Instance	This icon shows that the Part Reference is contextual and this Instance is the Definition Instance. The green gear and the blue chain signify the "original" instance of a part that is contextual (driven by another part, built with another part's data) in a CATProduct.
_ Instance of the Definition Instance	This contextual part, represented by the white gear and the green arrow, is an Instance of the Definition Instance, coming from the Contextual Part. The geometry of this instance is connected with the Definition Instance (contextual link). Note that you can edit this contextual part.
_ Other Instance of the Contextual Part	The brown gear and the red flash signify that the Part reference is contextual and that this instance is not used in the Part Definition. Note that you can edit this Contextual Part. This symbol can appear when you copy / paste or insert a Contextual Part into another CATProduct without taking into account the contextual links. In this case the user needs to resort to the "Define Contextual Links" or "Isolate Part" commands in order to redefine the context of the Part and this red flash will be turned into a blue chain or green arrow. For more information, please read the following scenarios: *Defining Contextual Links: Editing and Replacing Commands*, and *Isolating a Part in Product Structure User' Guide*.
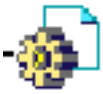 Part1	Reference of a part. For more information, refer to Insert a New Part in *Product Structure User's Guide*.

Deactivated_Component

A deactivated component. The shape representation is deactivated; its geometry is not visible. This functionality can occur simultaneously on several documents containing this component, especially when this component is the instance of a reference. This operation is equivalent to the **Delete** operation because the reference of the component no longer exists within the Bill Of Material.

Deactivated_Product

A deactivated product.

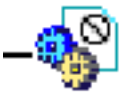
Unloaded_Product

The geometry of the component disappears. The product is downloaded, its references are missing but the user is able to find them back.

Symbols reflecting an incident in the Geometry building

Miscellaneous Incidents

Incidents on Constraints

Miscellaneous Incidents

Part to be updated

Product5

No visualization of the product or the part. The product's reference cannot be found. The geometry of the component disappears.

PartBody

A broken link. The access to this product is impossible because the link with the root document has been lost.

A broken shaft.

The pocket's representation is deactivated.

Isolated plane (can no longer be edited)

Incidents on Constraints

Offset.1

A broken constraint. The access to this product and the information about its constraints cannot be retrieved.

Parallelism.1

A deactivated constraint (a parallelism constraint).

Perpendicularity.1 A constraint to be updated (a perpendicularity constraint).

Referenced Geometry

Referenced Geometry

Geometry copied from a document different from the CATPart document in which it is pasted.

Initial geometry has undertaken modifications in the original CATPart document: solid to be synchronized.

Initial geometry has been deleted in the original CATPart document or the original CATPart document has not been found

Pointed document found but not loaded (use the Load contextual command or the Edit -> Links command)

External link deactivated so that geometry cannot be synchronized during the update of the part (even if the option "Synchronize all external references for update" is on).

Geometry pasted (using the As Result with Link option) within the same CATPart document from which it is has been copied

Point referenced in the CATPart document is a published element.

Sketch referenced in the CATPart document is a published element. The published point has undertaken modifications so that a synchronization is required.

Customizing

Before you start your first working session, you can customize the way you work to suit your habits.
This type of customization is stored in permanent setting files: these settings will not be lost if you end your session.

1. Select the **Tools -> Options** command.

   The **Options** dialog box opens.

2. Select the **Mechanical Design** category in the left-hand box.

3. Select the **Assembly Design** sub-category.

   Various tabs let you set assembly and constraint settings to be used in an assembly document.

   - The General tab lets you set the general options.
   - The Constraints tab lets you define the constraint options.
   - The DMU Sectioning tab lets you define the digital mock-up sectioning options.

4. Select the **General** category in the left-hand box.

5. Select the **Parameters and Measure** sub-category.

   Various tabs are displayed, the symbol tab lets you set constraint appearance settings to be used in an assembly document.

   - The Symbols tab lets you set the constraint appearance options.

6. Select the **Infrastructure** category in the left-hand box.

7. Select the **3D Annotations Infrastructure** sub-category.

   Various tabs let you set annotation settings to be used in an assembly document.

   - The Tolerancing tab lets you set the tolerancing options.
   - The Display tab lets you define the annotation display options.
   - The Manipulators tab lets you set the manipulator options.
   - The Annotation tab lets you the annotation display options.
   - The View/Annotation Plane tab lets you define the view/annotation plane options.

8. Select the **Product Infrastructure** sub-category.

   Two tabs also interfere with Assembly Design.

- Cache Management
- Cgr Management

9. Select the **General** category in the left-hand box.

10. Select the **General** sub-category.

The General tab lets you set whether the referenced documents in a CATProduct are loaded.

- Loading of Referenced Document

General

This page deals with the options concerning:

- The Update.
- The Update propagation depth.
- The Compute exact update status at open.
- The Access to geometry.
- The Move components involved in a Fix Together.

Update

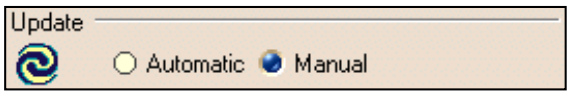

Defines the assembly update activating options, which affects Assembly constraints, Assembly features, Weld features, contextual design:

- **Automatic**: updates the assembly automatically after each interaction.
- **Manual**: lets you decide when you need to update your assembly.

By default, the **Manual** option is selected.

Update propagation depth

Defines the assembly update propagation options, which affects Assembly constraints, Assembly features, Weld features:

- **Active level**: updates the child components of the active components only.
- **All the levels**: updates all the components recursively from the active components.

By default, the **All the levels** option is selected.

Compute exact update status at open

Defines the update status when you are opening an assembly document or inserting an assembly component.

This option is only taken into account when you work with the **Work with the cache system** option selected, which is located in the **Infrastructure -> Product Structure ->Cache Management -> Cache Activation** frame.

By default, this option is not selected.

- **Automatic**: loads the minimal data needed in assembly components to determine the update status of the assembly: updated or not.
- **Manual**: displays the **Unknown Status Update** icon when the minimal data needed are not loaded to determine the update status of the assembly.

By default, the **Manual**option is selected.

Access to geometry

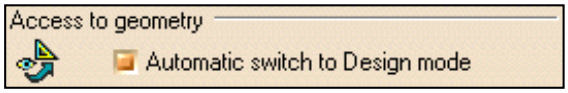

Ensures that the application will automatically launch the **Design mode** when using the following commands: constraints creation, reuse pattern and define multi-instantiation.

This option is only taken into account when you work with the **Work with the cache system** option selected, which is located in the **Infrastructure -> Product Structure ->Cache Management -> Cache Activation** frame.

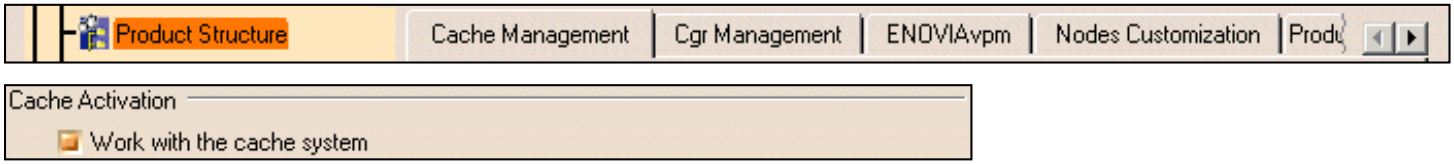

By default, this option is not selected.

Automatic switch to Design mode

Defines whether the automatic switch is allowed.

By default, this option is selected.

Move components involved in a Fix Together

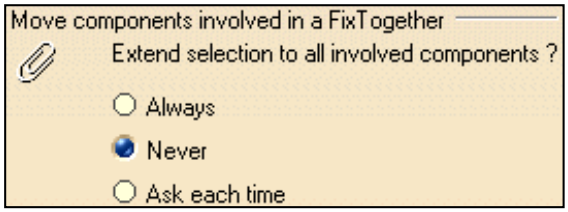

Defines the move behavior for the components involved in a Fix Together.

Extend selection to all involved components?

Defines the move selection extending.

- **Always**: ensures to move all the components involved in a Fix Together without warning.
- **Never**: ensures to move only the selected component involved in a Fix Together without warning.
- **Ask each time**: ensures to display of a warning message that appears when moving components.
  The warning message will appear whenever you will apply the following commands to components fixed together: **compass**, **Snap**, **Translation or Rotation** or **Manipulate**.

By default, the **Never** option is selected.

Constraints

This page deals with the options concerning:

- The Paste components.
- The Constraints creation.
- The Quick Constraint.

Paste components

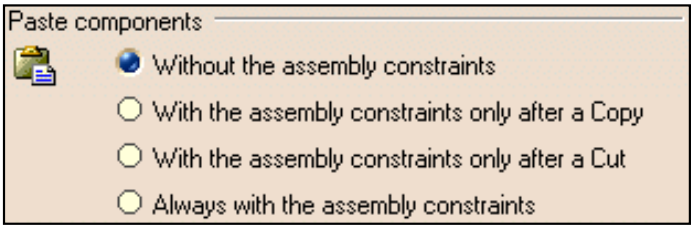

Defines the paste component behavior options:

- **Without the assembly constraints**: pastes one or several components without the assembly constraints applying to them.
- **With the assembly constraints only after a Copy**: pastes one or several components with the assembly constraints applying to them, only after the **Copy** command.
- **With the assembly constraints only after a Cut**: pastes one or several components with the assembly constraints applying to them, only after the **Cut** command.
- **Always with the assembly constraints**: pastes one or several components always with the assembly constraints applying to them.

By default, the **Without the assembly constraints** option is selected.

Constraints creation

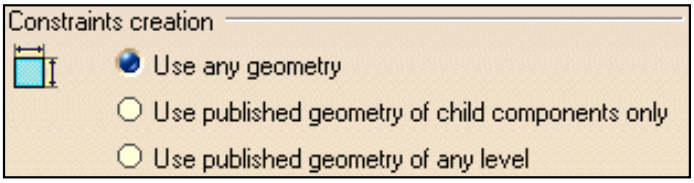

Defines the constraint creation options:

- **Use any geometry**: allows you to select any geometrical element.
- **Use published geometry of child components only**: allows you to select any published element belonging to child components.
  For more information about publication, refer to **Managing a Product Publication** in the **Assembly Design** documentation.
- **Use published geometry of any level**: allows you to select any published element.

By default, the **Use any geometry** option is selected.

Quick Constraint

The **Quick Constraint** command is based on a ordered list of constraints to be created by the application. The setting available here lets you reorder the list of constraints having priority when applying the **Quick Constraint** command to the selected geometrical elements. What you need to do is select the constraint type you wish to reorder and click the arrows to the right of the selection to reorder the selected constraint.

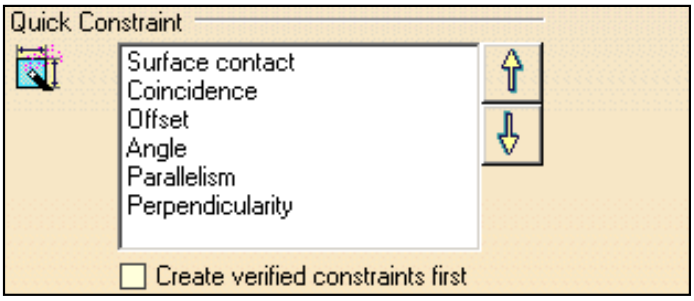

By default, the ordered list is the following:

- Surface contact.
- Coincidence.
- Offset.
- Angle.
- Parallelism.
- Perpendicularity.

Creation verified constraints first

Defines whether you want to create verified constraints with the **Quick Constraint** command.

By default, this option is not selected.

DMU Sectioning

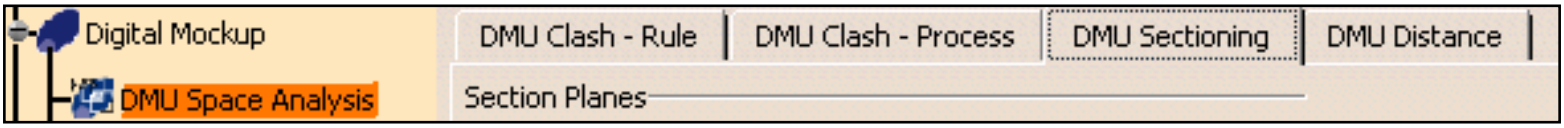

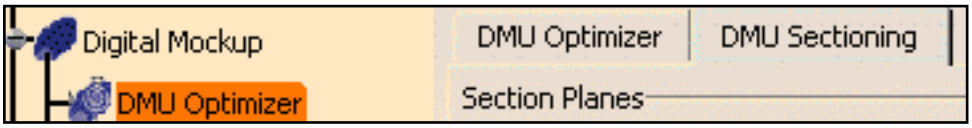

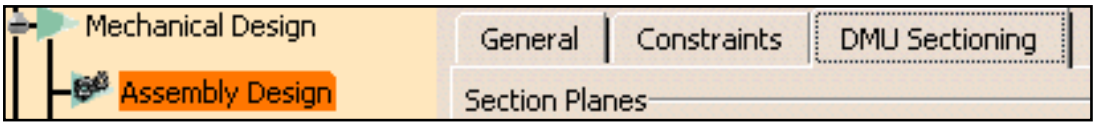

The DMU Sectioning tab contains three categories of options:

- Section planes
- Section grid
- Results window

Section Planes

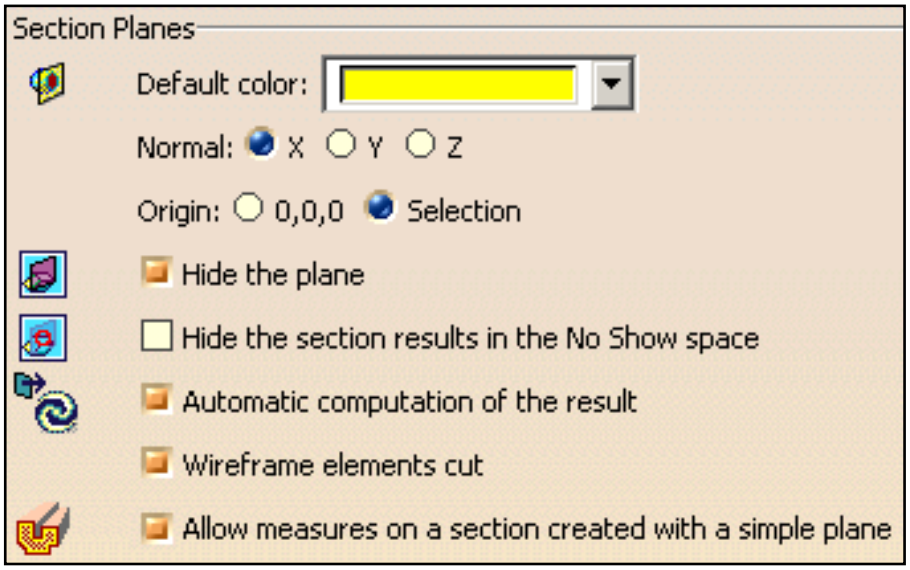

Default color

Use the color chooser to define the default color of section planes.

By default, color is as shown above.

Normal X, Y, Z

Select the option specifying the absolute axis along which you want to orient the normal vector of the section plane (master plane in the case of slices and boxes).

By default, the normal vector is oriented along X.

Origin

Select the option locating the center of the plane:

- **0,0,0**: at absolute coordinates 0,0,0
- **Selection**: at the center of the bounding sphere around the products in the selection you defined.

By default, the origin option is set to **Selection**.

Hide the plane

Selecting this checkbox hides the plane on exiting the command. If cleared, the plane is kept in the Show space on exiting the command.

By default, this option is selected.

Hide the section results in the No Show space

Selecting this checkbox transfers the section results to the No Show place on exiting the command.

By default, this option is cleared.

Automatic computation of the result

Selecting this checkbox automatically updates sectioning results while manipulating the plane. If cleared, sectioning results are computed when you release the mouse button.

By default, this option is selected.

Wireframe elements cut

Selecting this checkbox takes wireframe elements into account and the section plane sections any wireframe elements present. Points represent the intersection of the plane with wireframe elements.
If cleared, wireframe elements are not taken into account.

By default, this option is selected.

Allow measures on a section created with a simple plane

Selecting this checkbox gives the same 3D section cut display for a plane as in the case of a slice or box and lets you make measures on the wireframe section cut.

By default, this option is checked.

Section Grid

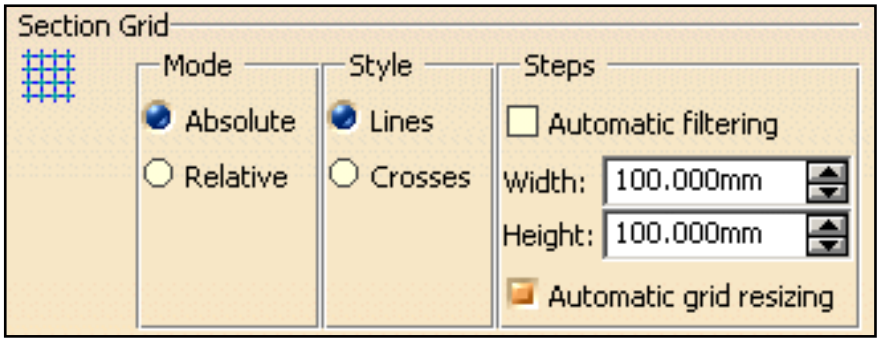

Mode

Select the option to locate the grid:

- **Absolute**: sets grid coordinates with respect to the absolute axis system of the document.
- **Relative**: places the center of the grid on the center of the section plane (master plane in the case of slices and boxes).

By default, the mode is set to **Absolute**.

Style

Select the option defining how the grid is represented: **Lines** or **Crosses**.

By default, the style is set to **Lines** .

Steps - Automatic filtering

Selecting this checkbox automatically adjusts the level of detail of the grid display when you zoom in and out.

By default, this option is cleared.

Steps - Width, Height

In the **Width** and **Height** boxes, type or select a new value to specify the spacing between grid lines. Units are current units set using **Tools -> Options.**

By default, width and height are set to 100.

Steps - Automatic grid resizing

Selecting this checkbox automatically re-sizes the grid to section results when moving the section plane. If cleared, the grid has the same dimensions as the section plane.

By default, this option is selected.

Automatic grid resizing ON:

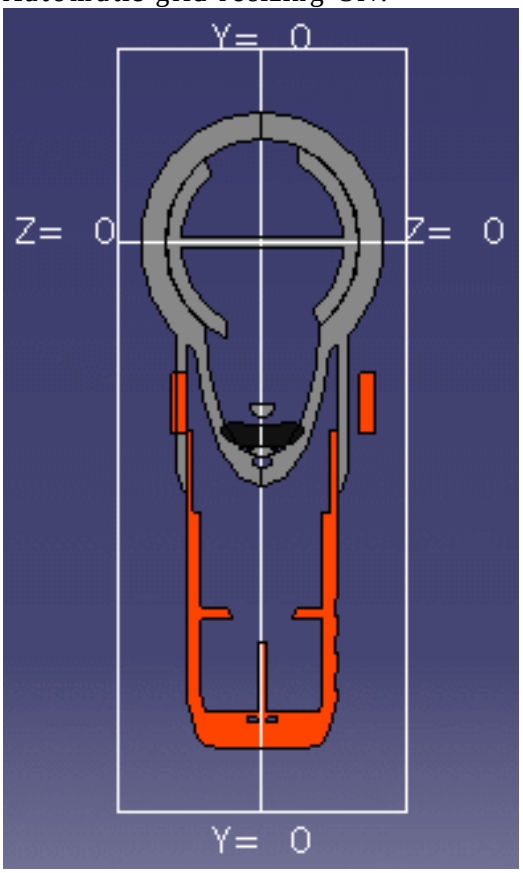

Automatic grid resizing OFF:

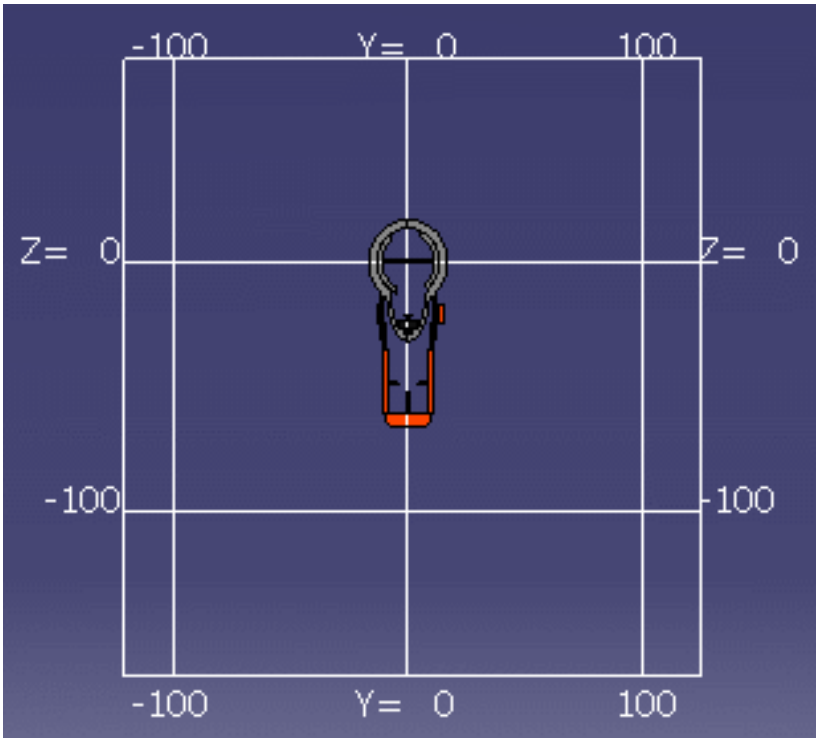

Results Window

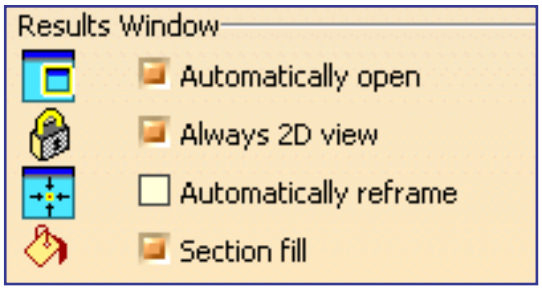

Automatically open

Selecting this checkbox always displays the Section viewer when in the Sectioning command.
Note: If cleared, the preview window is displayed.
If, in addition, you clear the Sectioning preview option in the Digital Mockup General tab (**Tools -> Options -> Digital Mockup -> General**), then no viewers are displayed.

By default, this option is selected.

Always 2D view

Selecting this checkbox locks the Section viewer in a 2D view. If cleared, you can work in a 3D view.

By default, this option is selected.

Automatically reframe

Selecting this checkbox automatically fits the results into the available space in both the Section viewer and preview window when manipulating the section plane in the document window.

By default, this option is cleared.

Section fill

Selecting this checkbox fills in the section to generate a surface for measurement and display purposes.

By default, this option is selected.

Symbols

This tab deals with with these categories of options:

- Constraint Style
- Dimension Style
- Display at Creation
- Preview

Constraint Style

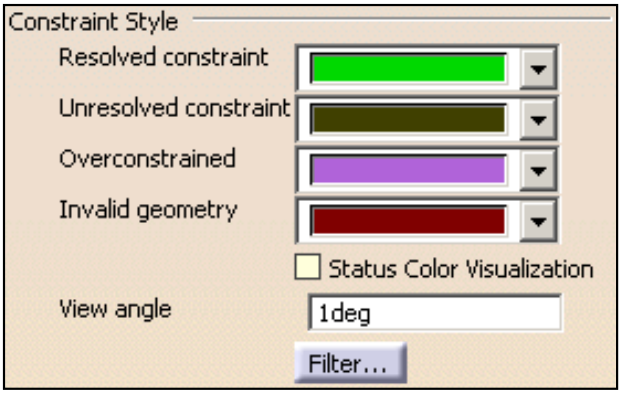

Defines the constraint style options:

Resolved constraint

Defines the color status for resolved constraints.

By default, the color is green. See the screen capture.

Unresolved constraint

Defines the color status for unresolved constraints.

By default, the color is dark green. See the screen capture.

Overstrained

Defines the color status for overstrained constraints.

By default, the color is purple. See the screen capture.

Invalid geometry

Defines the color status for constraints set on a geometry became invalid.

By default, the color is dark red. See the screen capture.

Status Color Visualization

Defines if the default status color or the graphical user defined color is displayed on constraint.

By default, this option is not selected (default status color).

View Angle

Defines the angle from which the constraint is displayed in the geometry area, when you are rotating the geometry.
This angle is measured between the normal to the screen and the constraint direction.

By default, the value is 1deg.

Filter...

Click this button to display the **Constraint Filter** dialog box.

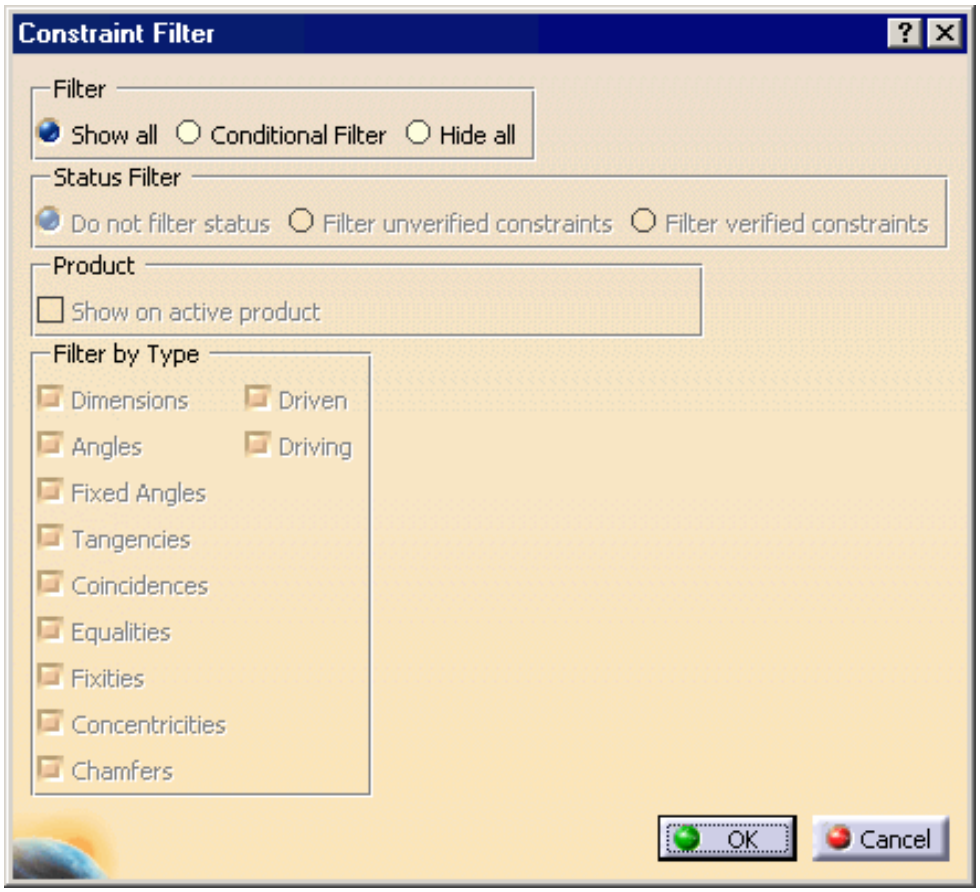

Filter

Defines the general filter options:

- **Show all**: displays all the constraints.
- **Conditional Filter**: displays the constraints according to the Status Filter, Product and Filter by Type selected options.
- **Hide all**: hides all the constraints.

By default, the **Show all** option is selected.

Status Filter

Defines the status filter options:

- **Do not filter status**: displays the constraints without take into account their status, verified or not.
- **Filter unverified constraints**: displays the unverified constraints only.
- **Filter verified constraints**: displays the verified constraints only.

By default, the **Do not filter status** option is selected.

Product

Defines the product filter option:

- **Show on active product**: defines whether the constraints of the active product only are displayed.

By default, this option is not selected.

Filter by Type

Defines the filter by type options:

- **Dimensions**: defines whether dimension constraints are displayed.
- **Angles**: defines whether angle constraints are displayed.
- **Fixed Angles**: defines whether fixed angles constraints are displayed.
- **Tangencies**: defines whether tangency constraints are displayed.
- **Coincidences**: defines whether coincidence constraints are displayed.
- **Equalities**: defines whether equal constraints are displayed.
- **Fixities**: defines whether fix constraints are displayed.
- **Concentricities**: defines whether concentricity constraints are displayed.
- **Chamfers**: defines whether chamfer constraints are displayed.
- **Driven**: defines whether driven constraints are displayed.
- **Driving**: defines whether driving constraints are displayed.

By default, all these options are selected.

Dimension Style

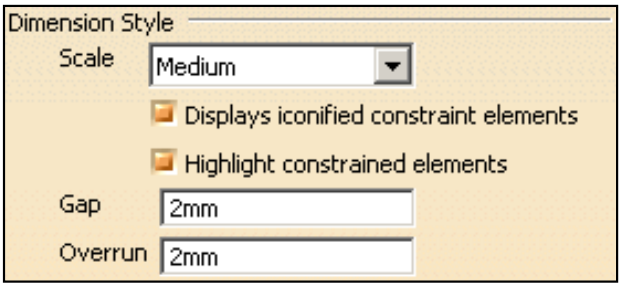

Defines the dimension style options:

Scale

Defines the size of the graphical symbols for constraint (tangency, parallelism, leader arrow) options:

- **Small**: displays small symbols.
- **Medium**: displays medium symbols.
- **Large**: displays large symbols.

By default, the **Medium** option is selected.

Displays iconified constrained elements

Defines whether the iconified constrained elements are displayed.

By default, this option is selected.

Highlight constrained elements

Defines whether the constrained geometries are highlighted when you pre-select a constraint.

By default, this option is selected.

Gap

Defines the distance between the constrained geometries and constraint extension lines.

By default, the value is 2mm.

Overrun

Defines the distance between the constraint dimension lines and constraint extension lines.

By default, the value is 2mm.

Display at Creation

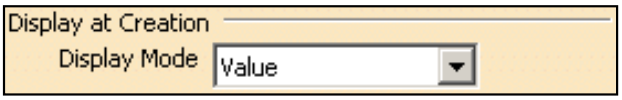

Defines the constraint display options:

Display Mode

- **Value**: displays the constraint value only.
- **Name**: displays the constraint name only.
- **Name+Value**: displays the constraint name and value only.
- **Name+Value+Formula**: displays the constraint name and value or the constraint name and formula.

By default, the **Value** option is selected.

Preview

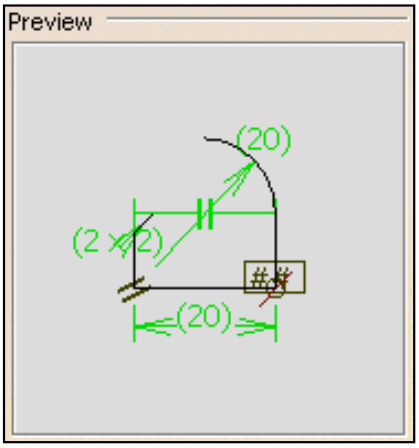

Pre-visualizes the constraint appearances according to the Constraint Style, Dimension Style and Display at Creation options.

Tolerancing

This page deals with the options concerning:

- The Tolerancing Standard.
- The Leader associativity to the geometry.

Tolerancing Standard

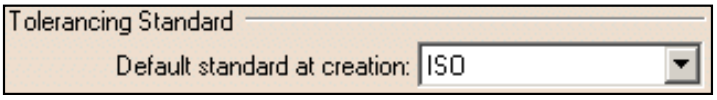

Defines conventional standard options:

Default standard at creation

- **ASME**: American Society for Mechanical Engineers
- **ASME 3D**: American Society for Mechanical Engineers
- **ANSI**: American National Standards Institute
- **JIS**: Japanese Industrial Standard
- **ISO**: International Organization for Standardization

By default, the **ISO** standard is selected.

Leader associativity to the geometry

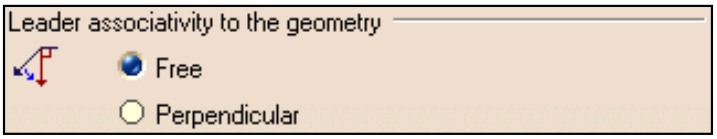

Defines the leader associativity options:

- **Free**: specifies that leader annotations are freely positioned relative to their geometrical elements.
- **Perpendicular**: specifies that leader annotations are positioned perpendicular to their geometrical elements.

By default, the **Free** option is selected.

Display

This page deals with the options concerning:

- The Grid.
- The Annotations in Specification Tree.

Grid

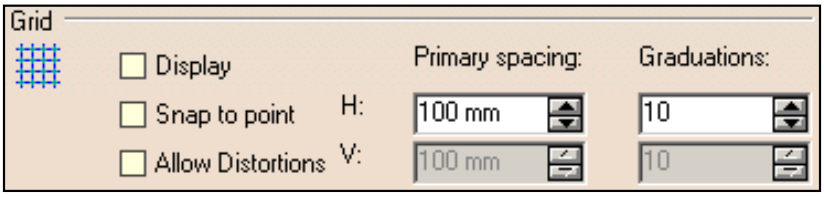

Defines the grid options:

Display

Defines whether the grid is displayed.

By default, this option is not selected.

Snap to point

Defines whether annotations are snapped to the grid's point.

By default, this option is not selected.

Allow Distortions

Defines whether grid spacing and graduations are the same horizontally and vertically.

By default, this option is not selected.

H Primary spacing

Defines the grid's horizontal spacing.

By default, the value is 100mm.

H Graduations

Defines the grid's horizontal graduations.

By default, the number of graduation is 10.

V Primary spacing

Defines the grid's vertical spacing, available only if Allow Distortions is selected.

By default, the value is 100mm.

V Graduations

Defines the grid's vertical graduations, available only if Allow Distortions is selected.

By default, the number of graduation is 10.

Annotations in Specification Tree

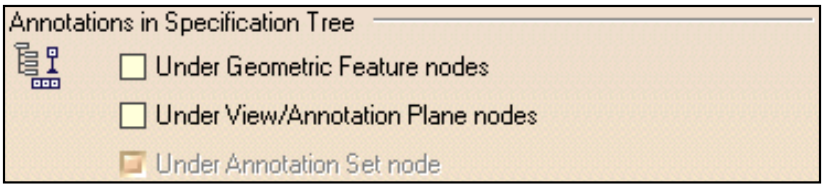

Defines the annotations in specification tree options:

Under Geometric Feature nodes

Defines that 3D annotations should be displayed under the geometric feature nodes in the specification tree. This lets you view 3D annotations under the Part Design or Generative Shape Design feature nodes to which they are applied.

By default, this option is not selected.

Under View/Annotation Plane nodes

Defines that 3D annotations should be displayed under the view/annotation plane nodes in the specification tree. This lets you view 3D annotations under the view node to which they are linked.

By default, this option is not selected.

Under Annotations Set node

Defines that 3D annotations should be displayed under the annotation set node in the specification tree, available only if Under View/Annotation Plane nodes is selected.

By default, this option is selected.

Manipulators

This page deals with the options concerning:

- The Manipulators.

Manipulators

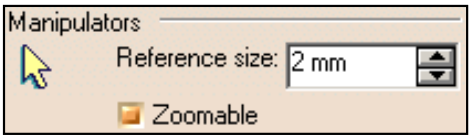

Defines the manipulator options:

Reference size

Defines the annotation manipulator's size.

By default, the reference size is 2mm.

Zoomable

Defines whether the annotation manipulator is zoomable or not.

By default, this option is selected.

Annotation

This page deals with the options concerning:

- The Annotation Creation.

Annotation Creation

Defines the annotation creation options:

Annotation following the mouse (Ctrl toggles)

Defines whether the annotation is positioned according to the cursor, following it dynamically during the creation process or not.

By default, this option is not selected.

View/Annotation Plane

This page deals with the options concerning:

- The View/Annotation Plane Associativity.
- The View/Annotation Plane Display.

View/Annotation Plane Associativity

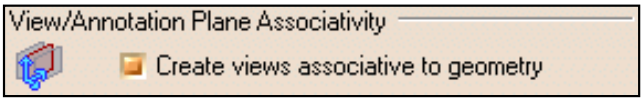

Defines the View/Annotation Plane associativity options:

Create views associative to geometry

Creates views associative to the geometry, so that views and their annotations are automatically updated when the geometry is modified.

By default, this option is selected.

View/Annotation Plane Display

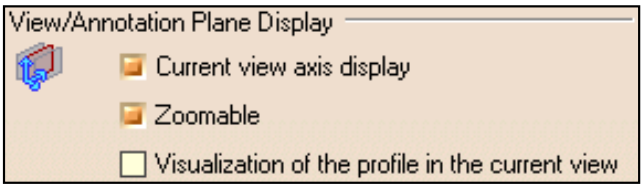

Defines the View/Annotation Plane display options:

Current view axis display

Defines whether the active annotation plane axis system is displayed.

By default, this option is selected.

Zoomable

Defines whether the annotation plane axis is zoomable.

By default, this option is selected.

Visualization of the profile in the current view

Defines whether the view/annotation plane profile on the part/product is displayed.

By default, this option is not selected.

Cache Management for CATProduct and CATProcess Document

This page deals with the options concerning:

- The Cache Activation.

Cache Activation

Please refer to *Infrastructure user's guide* to know more about the Product Structure **Cache Management** options.

Work with the cache system

You need to select this option to work with the cache system. When selected, this option allows you work in **Visualization** mode, otherwise you are working in **Design** mode.

By default, this option is not selected.

Cgr Management for 3D Annotation

This page deals with the options concerning:

- The Applicative data.

Applicative data

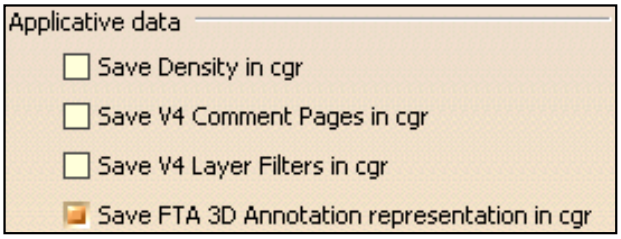

Please refer to *Infrastructure user's guide* to know more about the Product Structure **Cgr Management** options.

Save FTA 3D Annotation representation in cgr

You need to select this option to add the 3D annotations representation contained in a CATProduct or a CATProcess document to the generated cgr documents. This option is taken into account when the Cache Activation option is selected only.

By default, this option is not selected.

Loading of Referenced Document

This page deals with the options concerning:

- The Referenced Documents.

Referenced Documents

Please refer to *Infrastructure user's guide* to know more about the Product Structure **General** options.

Load referenced documents

You need to select this option to load the related documents with a CATProduct document.

By default, this option is selected.

Reference Information

This section contains reference information about the Assembly design workbench.

Assembly Update
Constraints
Design in Assembly Context
Assembly Features
Batches and Macros

Assembly Update

This reference will describe the assembly update behaviors which are apply to **Assembly Design**, **Weld Design** and other related workbenches.

When updating an assembly, you are updating the following elements:

- Assembly constraints.
- Assembly features.
- Knowledgeware relations.
- Weld features.
- Geometry of part document.
- Functional Tolerancing & Annotations features.
- Measures.

See also **Update**, **Update propagation** and **Compute exact update status at open** options.

Update Status

There are three update status when you are designing an assembly, these status are computed from the current state of the assembly:

	The assembly is updated: all elements are up to date.
	The assembly is not updated: one element at least is not up to date.
	The assembly update status is unknown: there is not enough information to determine the update status (updated or not). This status appears when an element is contained into a component in visualization mode.

Constraints

This reference will describe assembly's constraints.

About Assembly Constraints

Coincidence Constraints

Contact Constraints

Offset Constraints

Angle Constraints

About Assembly Constraints

This reference describes what you should know to create assembly constraints:

- Rules
- Symbols
- Tip
- Geometry
- Customizing Constraints
- Selection
- V4 Interoperability

Rules

Setting constraints is rather an easy task. However, you should keep in mind the following::

- You can apply constraints only between the child components of the active component.
  Do not mistake the active component for the selected component:
  - The active component is blue framed (default color) and underlined. It is activated by double-clicking.

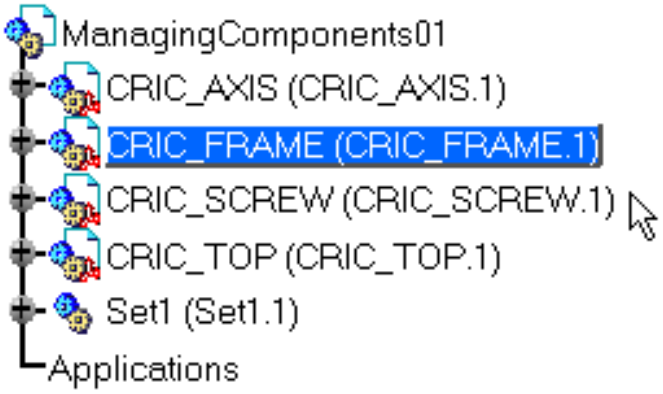

  - The selected component is orange framed (default color). It is selected by clicking.

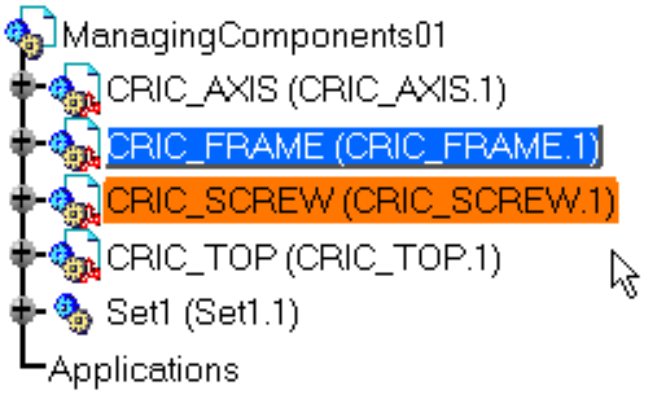

- You cannot define constraints between two geometrical elements belonging to the same component.

- You cannot apply a constraint between two components belonging to the same subassembly if this subassembly is not the active component.
- If you modified any geometrical elements of a constraint, take care if it already exists to solve the constraint, example, the axis of the spot facing in a counterbored hole disappears when the hole type is changed.
  - There are two offset constraints:
    - Offset.1 between the Part2 and the axis of the hole (sky blue) in Part1.
    - Offset.2 between the Part2 and the axis of the spot facing of the hole (orange) in Part1.

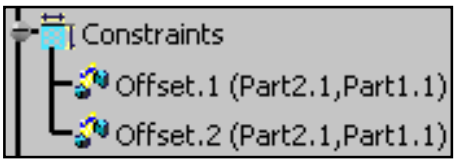

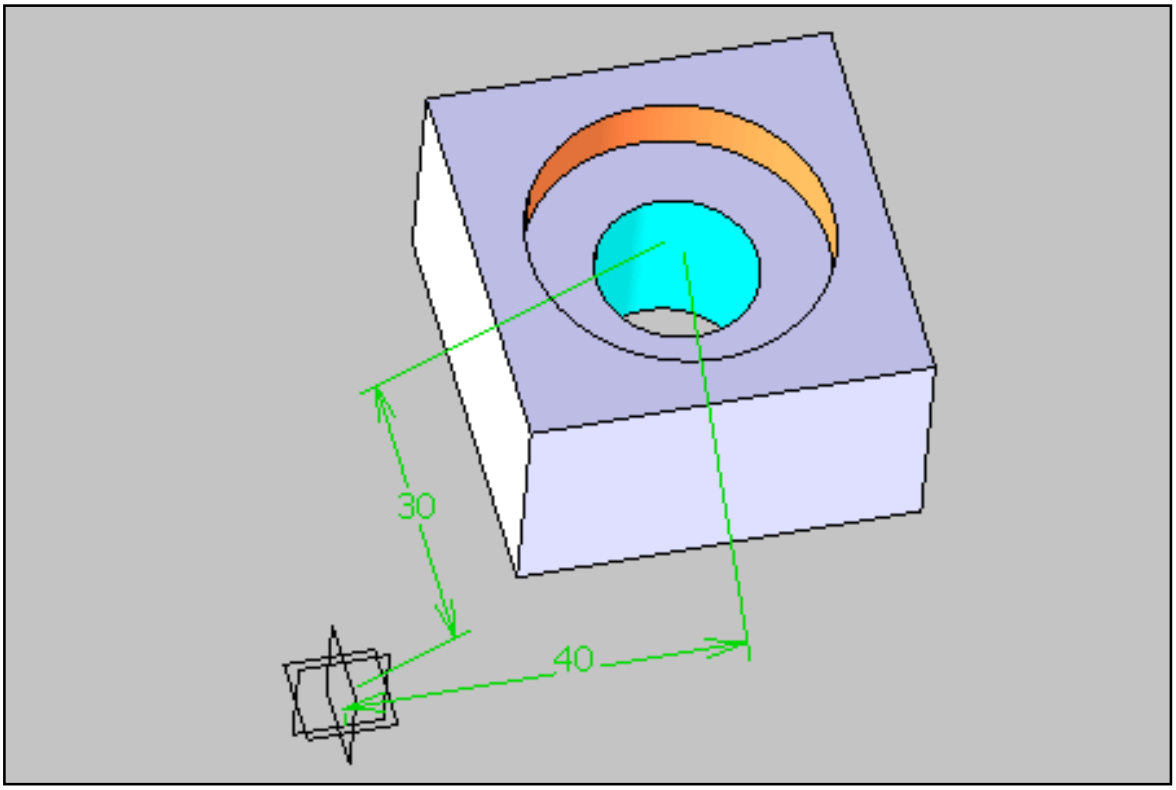

  - When changing the hole type from Counterbored to Simple, the spot facing is deleted as its axis.
    - The Offset.2 constraint is disconnected:

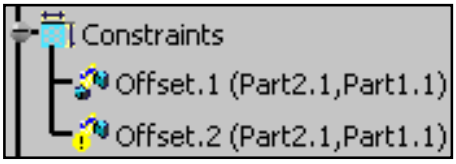

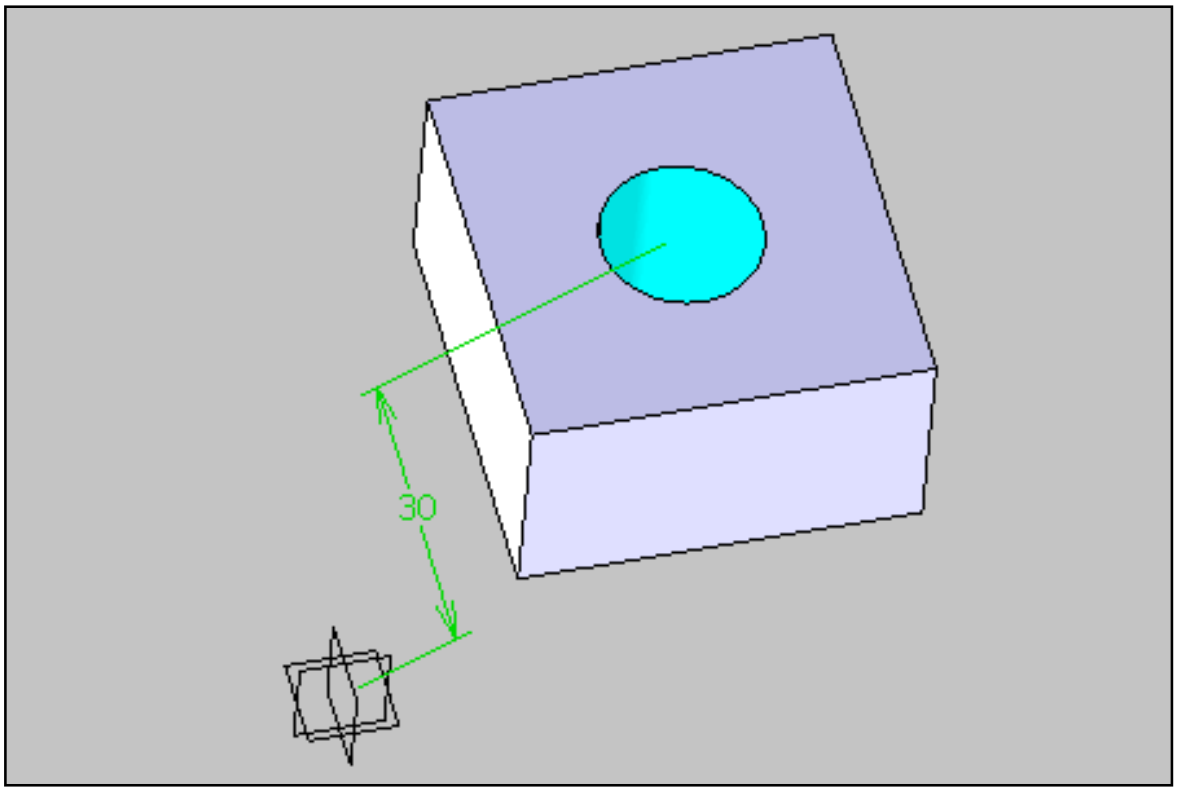

- The following example illustrates what you are allowed to do:

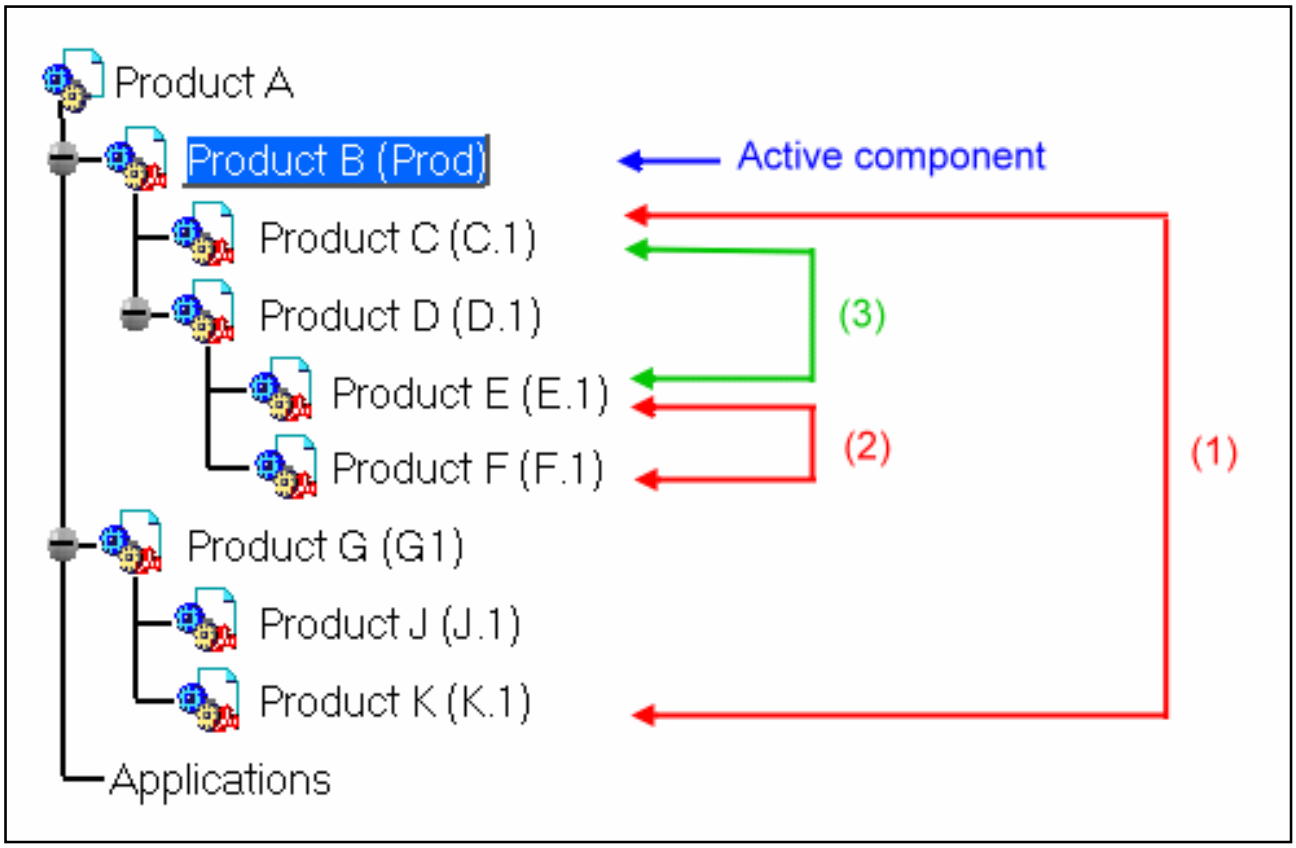

  - **(1)** The constraint cannot be applied because **Product K** does not belong to the active component **Product B**. To define this constraint, **Product A** must be made active.
  - **(2)** The constraint cannot be applied because **Product E** and **Product F** both belong to a component other than the active component **Product B**. To define this constraint, **Product D** must be made active.

- **(3)** The constraint can be applied since **Product C** belongs to the active component **Product B** and also **Product E** is contained within **Product D** which is contained within the active component **Product B**.

- When you set a constraint, there are no rules to define the fixed and the movable component during the selection. If you want to fix a component, use the **Fix** command. See Fixing a Component.

Symbols

The following table lists the symbols used to represent the constraints you can set between your components:

Constraints	Symbol used in the geometry area	Symbol displayed in the specification tree
Coincidence		
Contact		
Contact (point)		
Contact (line)		
Offset		
Angle Planar Angle	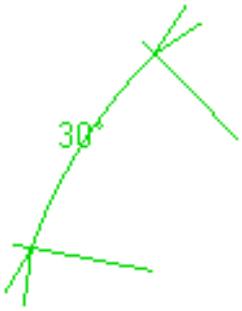	

Parallelism		
Perpendicularity	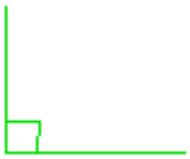	
Fix		

Note also that deactivated constraints are preceded by the symbol ( ) in the specification tree.

Tip

The name of a constraint displays when passing the mouse over that constraint.

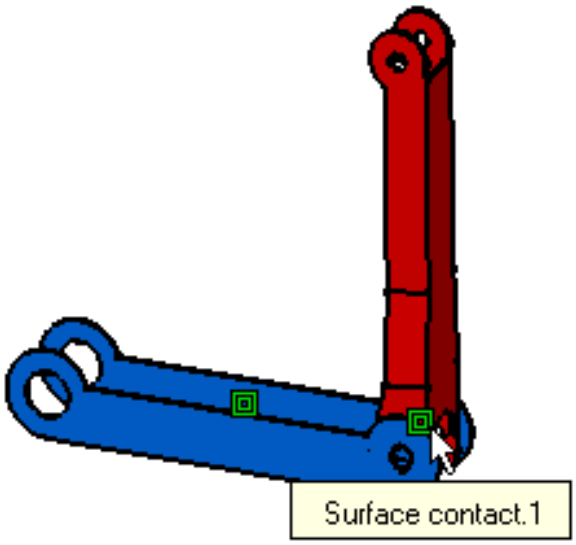

Geometry

To set constraints it is possible to select the geometry (plane, line or point) resulting from intersections, projections or offsets from the specification tree. For more about these operations, please refer to *Generative Shape Design User's Guide*.

Customizing Constraints

The application lets you customize the creation and the display of constraints. For more information, please refer to **Customizing Assembly Constraint** and **Customizing Constraint Appearance**.

Selection

To facilitate alternative selections when the geometry to be constrained is not directly accessible, the **Other Selection...** contextual command allows to you select the desired geometry.

In a cone example, its face is selected when you select the **Other Selection...** contextual command.

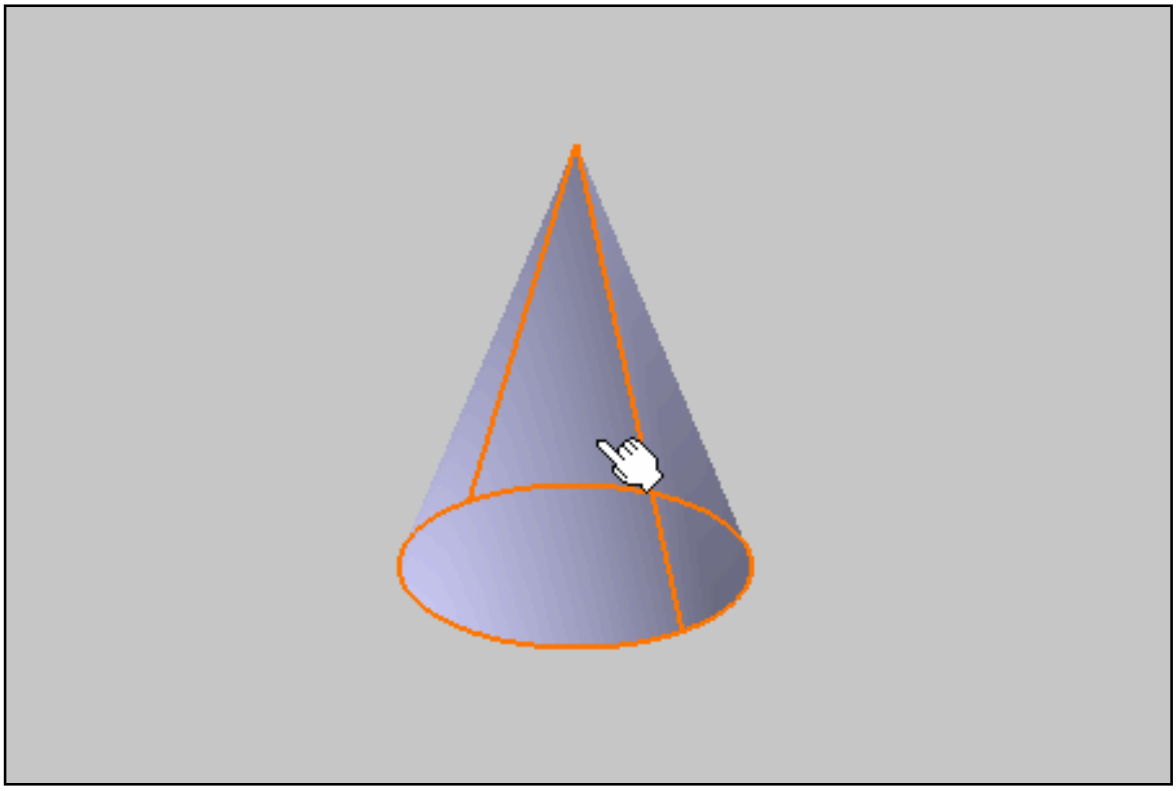

The **Other Selections** dialog box appears, the **Face** geometry element is selected.

In the the dialog box you can directly select the **Extremity** or the **Axis** geometry elements of the cone and show this selection in the geometry window as in the following images:

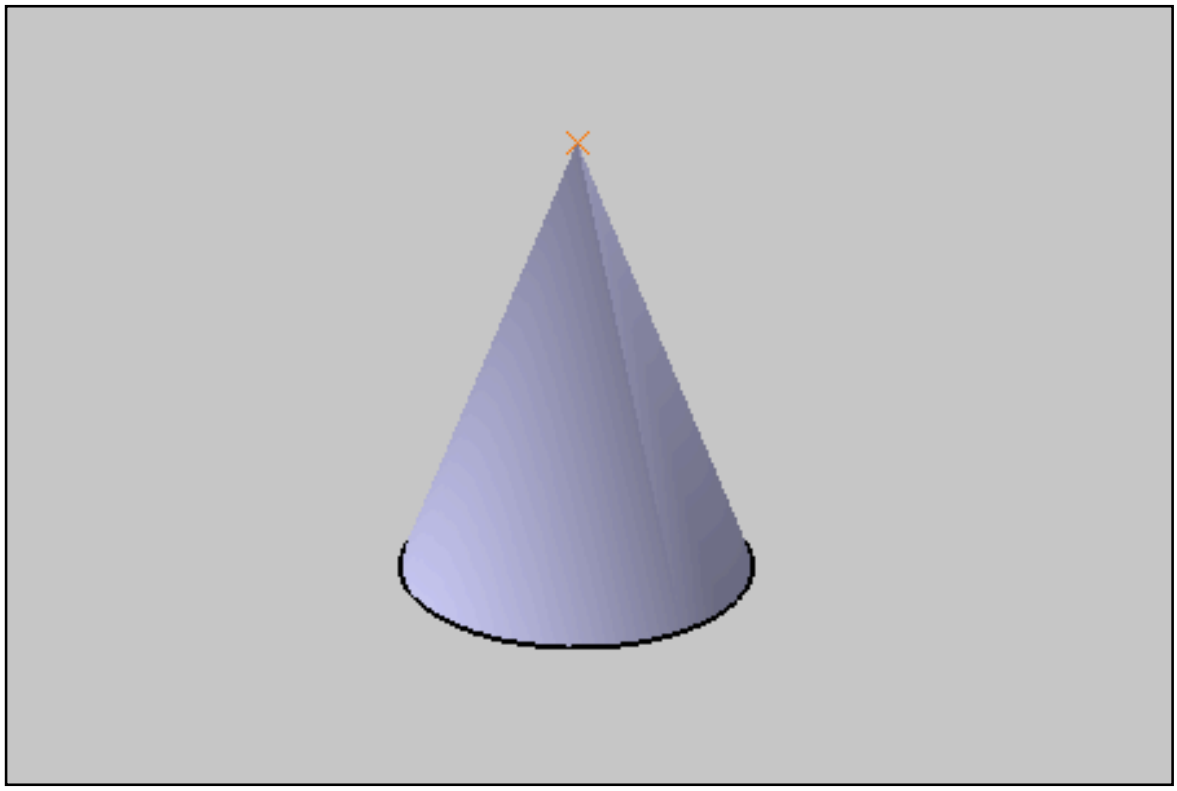

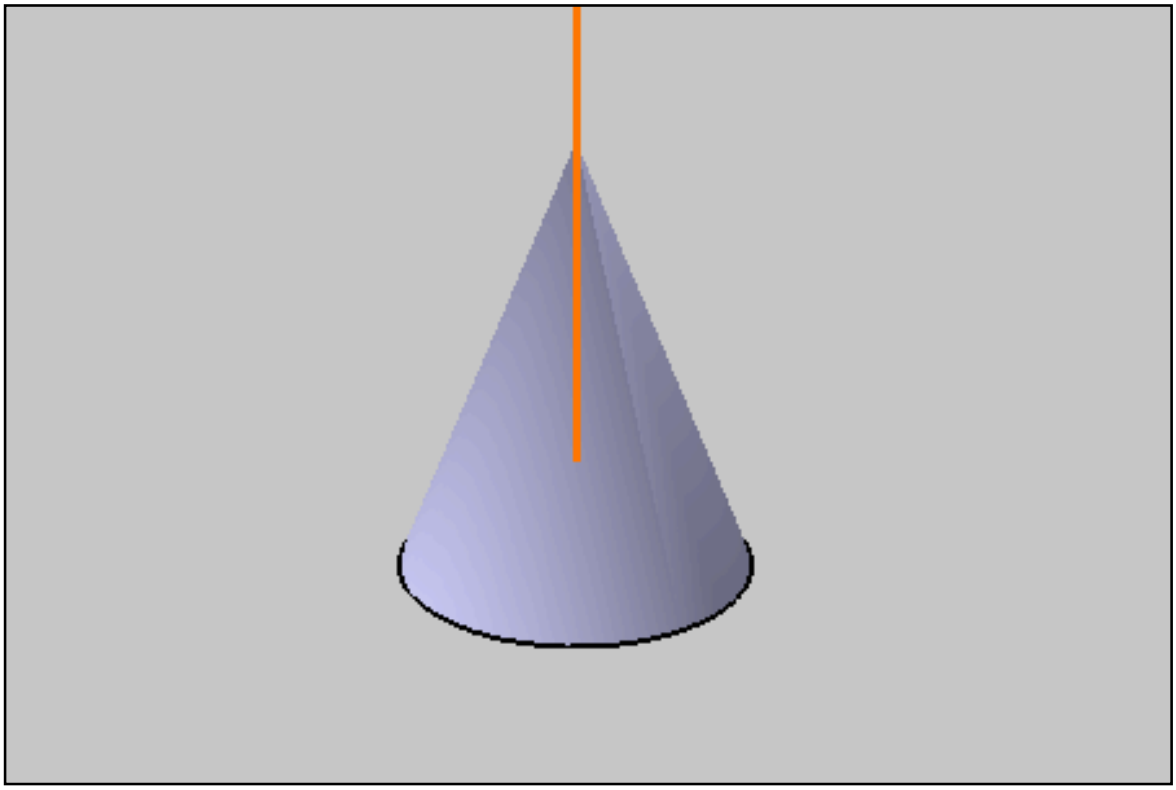

V4 Interoperability

You can set a constraint on a SOLIDE (solid exact) CATIA V4 feature, but you cannot set set a constraint on a SOLIDM (solid mockup) CATIA V4.

Coincidence Constraints

Coincidence-type constraints are used to align elements.

Depending on the selected elements, you may obtain concentricity, coaxiality or coplanarity. The tolerance i.e. the smallest distance that can be used to differentiate two elements is set at 10 -3 millimeters.

The following table shows the elements you can select for a coincidence constraint.

	Point	Line	Plane	Sphere (center)	Cylinder (axis)	Cone	Axis System	Curve	Tabulated Cylinder	Surface
Point						NA	NA			
Line						NA	NA	NA	NA	NA
Plane						NA	NA	NA	NA	NA
Sphere (center)					NA	NA	NA	NA	NA	NA
Cylinder (axis)				NA		NA	NA	NA	NA	NA
Cone	NA	NA	NA	NA	NA		NA	NA	NA	NA
Axis System	NA	NA	NA	NA	NA	NA		NA	NA	NA
Curve		NA	NA	NA	NA	NA	NA	NA	NA	NA
Tabulated Cylinder		NA	NA	NA	NA	NA	NA	NA	NA	NA
Surface		NA	NA	NA	NA	NA	NA	NA	NA	NA

- NA: Not Applicable.

To create a coincidence constraint between axis systems, they must have the same direction and the same orientation in the product.

You can also create coincidence between an axis system and components of another axis system:

- Origin point.
- Reference plane, in this case the reference plane must be parallel to the axis system.

Contact Constraints

Contact-type constraints can be created between two directed surfaces. Directed means that an internal side and an external side can be defined from a geometrical element, a surface of a pad for example. This definition excludes surfacic element and wireframe surface because they are not directed.

The common area between the two surfaces can be a plane (plane contact), a line (line contact) or a point (point contact).

The following table shows the elements you can select for a contact constraint.

	Planar Surface	Sphere	Cylinder	Cone	Circle
Planar Surface				NA	NA
Sphere		(1)	NA		
Cylinder		NA	(2)	NA	NA
Cone	NA		NA		
Circle	NA		NA		NA

- NA: Not Applicable.
- (1) A sphere-sphere contact is possible when their radius are equal. The contact constraint resulting is equivalent to a coincidence constraint, spheres look like merged.
- (2) A cylinder-cylinder contact is possible when their radius are equal. The contact constraint resulting is equivalent to a coincidence constraint, cylinders look like merged.

Offset Constraints

When defining an offset-type constraint between planar elements, you need to specify how faces should be oriented.
The offset value is always displayed next to the offset constraint.

The unit used is the unit displayed in the **Units** tab of the **Tools -> Options** dialog box. If you wish, you can customize it.

The following table shows the elements you can select for defining an offset constraint.

	Point	Line	Plane	Planar Face
Point				NA
Line				NA
Plane				
Planar Face	NA	NA		

- NA: Not Applicable.

Positive and Negative Offsets

When setting an offset constraint, you can define positive or negative offset values. For this, remember that:

- At least one of the components to be constrained must be a planar element, otherwise you cannot set positive nor negative offset values.
- The vector normal to the planar element indicates the positive offset value.
- If the planar element is an oriented plane, the normal vector pointing to the side opposite to material indicates the positive value.
- If the planar element is a wireframe plane, the application automatically deduces the positive or negative value. Green arrows show the positive value.

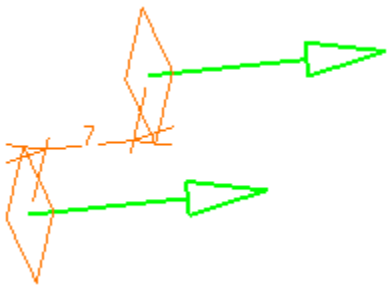

- If both components are planar elements, the selection order of the elements affects the result when using the orientation option (**Same**, **Opposite**, **Undefined**). The normal to the first selected element gives the positive value.

	Unsigned	Signed (Offset value<0)	Signed (Offset value>0)
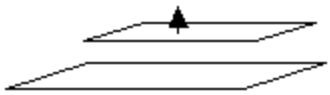 Undefined		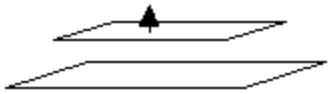	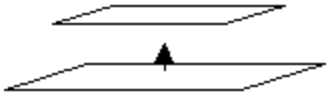
Same	—	Driven by selection order	
Opposite	—		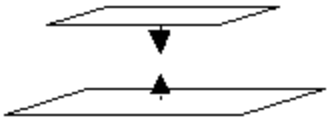

Angle Constraints

Angle-type constraints fall into three categories.
When defining an angle constraint between planar elements, you need to specify how faces should be oriented.
The offset value is always displayed next to the offset constraint:

- Angle
- Parallelism (when angle value equals zero), when setting a parallelism constraint, green arrows appear on the selected faces to indicate the orientations.
- Perpendicularity (angle value equals 90 degrees)

When setting an angle constraint, you will have to define an angle value. Note that this angle value must not exceed 90 degrees.

The tolerance i.e. the smallest angle that can be used to differentiate two elements is set at 10^{-6} radians.

The following table shows the elements you can select for an offset constraint.

	Line	Plane	Planar Face	Cylinder (axis)	Cone (axis)
Line					
Plane					
Planar Face					
Cylinder (axis)					
Cone (axis)					

Design in Assembly Context

Assembly Design can be cooperatively used with Part Design in many ways.
If in a CATProduct document you can design parts from scratch or reshape them, you can also create associative links between several parts. These links can be geometrical and are then referred to as External references"or parametrical then referred to as External parameters in the specification tree. Assembly Design provides a large range of commands or options to manage those links.
These capabilities are:

- **Keep link with selected object** option lets you maintain the links between external references, copied elements for example, and their origins when you are editing these elements. For more information, see Customizing General Settings, External References.

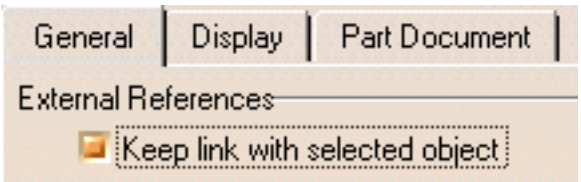

- **Isolate** contextual command: cuts the link between external references and their origins.
Management of both assembly constraints and design in context: it is possible to set constraints between published geometrical elements. See Constraint Creation in customizing assembly constraints.

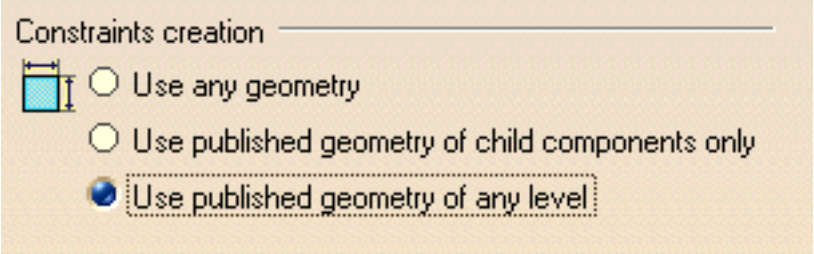

- **Edit Links**, see Displaying Document Links and Editing Documents Links in Infrastructure User's Guide.
- Copy of external elements to update parts outside assembly context.
- Automatic synchronization during update operations, or manual synchronization.
- **Activate/Deactivate** link.
- Publication: to reuse existing designs and manage links. For more information, see Customizing General Settings, External References.

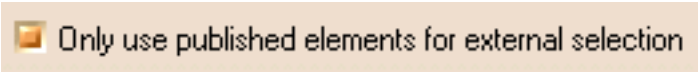

- **Copy Break/Link/New From** to quickly reuse a part.

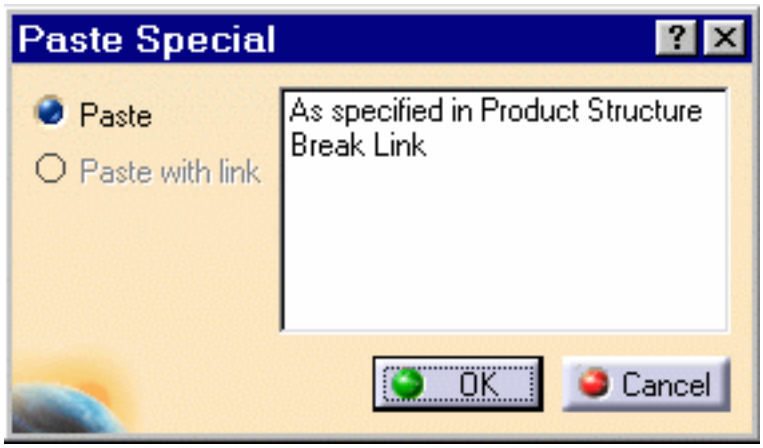
Paste Special
Paste
Paste with link
As specified in Product Structure
Break Link
OK
Cancel

Assembly Features

This reference will describe Assembly Feature behaviors in assembly document and their Resulting Features in part document.

Visualization Mode

According to the Access to geometry option, part documents in Visualization Mode affected by an Assembly Feature swap automatically or not to the Design Mode:

- If the **Automatic switch to Design mode** option is checked:
  - Assembly feature creation: selected part documents swap automatically from Visualization Mode to the Design Mode to create it.
  - Assembly feature edition: affected part documents swap automatically from Visualization Mode to the Design Mode to edit it.
  - Assembly feature deletion: affected part documents swap automatically from Visualization Mode to the Design Mode to delete it.

- If the **Automatic switch to Design mode** option is unchecked or if the part document is unloaded:
  - Assembly feature creation: selected part documents are not modified.
  - Assembly feature edition: affected part documents cannot be modified.
  - Assembly feature deletion: the Assembly Feature is deleted in the assembly document, but not the Resulting Features in the affected part documents. The **Broken** mask will appear on the specification tree Resulting Features icons, when the part will be loaded.

Links of Resulting Features

In Part Design context:

- The **Edit -> Links...** command show the links of the part's Resulting Features.
- The **Parent/Children...** command on a Resulting Feature show the Assembly Feature link.

If the link is broken, the **Broken** mask appears on the specification tree icons.

Isolate Resulting Features

To edit, copy, paste or delete a Resulting Feature, you must isolate it before these operation. In this case the resulting Feature behavior is the same as its Part feature equivalent. Take care that you cannot reconnect an isolated Resulting Feature.

Design in Context

Assembly features are always design in context and the **Keep link with selected object** option lets you maintain the links between external references only:

- If you wish to isolate a resulting feature, run the **Isolate** contextual command.
- If you wish to create a feature on only one part, edit the part directly.

See Design in Assembly Context for more information.

Batches and Macros

This reference will describe batches and macros dedicated for Assembly Design workbench.

Data Upgrade for Large Assemblies Performances: Tool to upgrade Assembly data to benefit from V5R10-11 performances improvements.

Data Upgrade for Large Assemblies Performances

In Releases 10, 11 and 12, several projects have been conducted to reduce the amount of memory required for an assembly in specific scenarios.

All those scenarios start with loading the assembly in visualization mode, and allow the user:

- To stay in visualization mode (actually product mode, typically from 10% to 15% more than visualization mode) and to get the up-to-date status of the assembly, with constraints, design in context or knowledgeware relations.
- To switch to Brep mode for assembly constraint creation, for drawing update.

The major benefit of those enhancements is to lower the required amount of memory used in those typical scenarios. The drafting creation can start at a much lower memory point, leaving enough memory for the necessary processing to generate the drawing.

Yet, the benefit of those enhancements is only available with newly created data. This means that all our current customers, using Releases 8 or 9, will not benefit from them, unless they recreate their data... or migrate it, thanks to this new development.

Needed Options

Select Tools -> Options... menu item:

- Cache Management on:
  - Select the **Infrastructure** category.
  - Select the **Product Infrastructure** sub-category.
  - Select the **Cache Management** tab.
  - See Cache Management for CATProduct and CATProcess Document.
- Load Referenced documents:
  - Select the **General** category.
  - Select the **General** sub-category.
  - Select the **General** tab.
  - See Loading of Referenced Document.

Before You Begin

The upgrade macro/batch might fail for very large assembly, in this case we suggest you to upgrade its subassemblies before.

Macro Usage

The macro is delivered in the application runtime view (./operating_system/VBScript)

1. Launch the application.
2. Open the assembly to be upgraded (CATProduct document).
3. SendTo if you want to keep the original data.
4. Close the original assembly.
5. Open the copy.
6. Launch Macro (Alt-F8 + UpgradeActiveDocumentMacro.CATScript)
7. Save Management.
8. Close the application.

Batch Usage

The batch is delivered in the application runtime view (./OS_a/code/bin), where OS_a is:

- intel_a
- aix_a
- hpux_b
- irix_a
- solaris_a.

The syntax of the command is as follows:

```
catstart -run "CATAsmUpgrade [-c|--check] [-f|--force] [-h|--help] [-n|--no-copy] [-o|--output-dir TargetDirectory]
[-p|--path ConcatenationPath] [-s|--stats] [-v|--verbose] DocumentList"
```

The CATAsmUpgrade and its related options must be included between double-quotes when using the catstart command.
For more information about catstart command see Starting a Session on Windows or Starting a Session on UNIX.

-c or **--check**	Prints for each document its upgrade status. This option performs a check only and disables -f and -n options.
-f or **--force**	Forces the CATPart documents upgrade to take benefit of Semantic Unstreaming.
-h or **--help**	Displays the help.
-n or **--no-copy**	Overwrites input data. This option disables -o option.
-o or **--output-dir** ***TargetDirectory***	Defines the target directory for upgraded documents. The default location is C:\temp for Windows and /tmp for Unix.
-p or **--path** ***ConcatenationPath***	Defines the paths where to find relative documents and dependencies. Paths are separated by a semi-colon. This option disables the application search order specifications.
-s or **--stats**	Prints statistics at the end of upgrade.
-v or **--verbose**	Verboses output.
DocumentList	The list of CATProduct documents to be upgraded. Document name containing blank character must be included between double quotes.

Batch Monitor Usage

The batch monitor allows you define this batch through an user interface.

1. Select **Tools -> Utilities...** menu item.
2. In the **Utilities** tab of the **Batch Monitor** dialog box, double-click the **CATAsmUpgadeBatch** utility.

   The **CATAsmUpgadeBatch** dialog box appears.

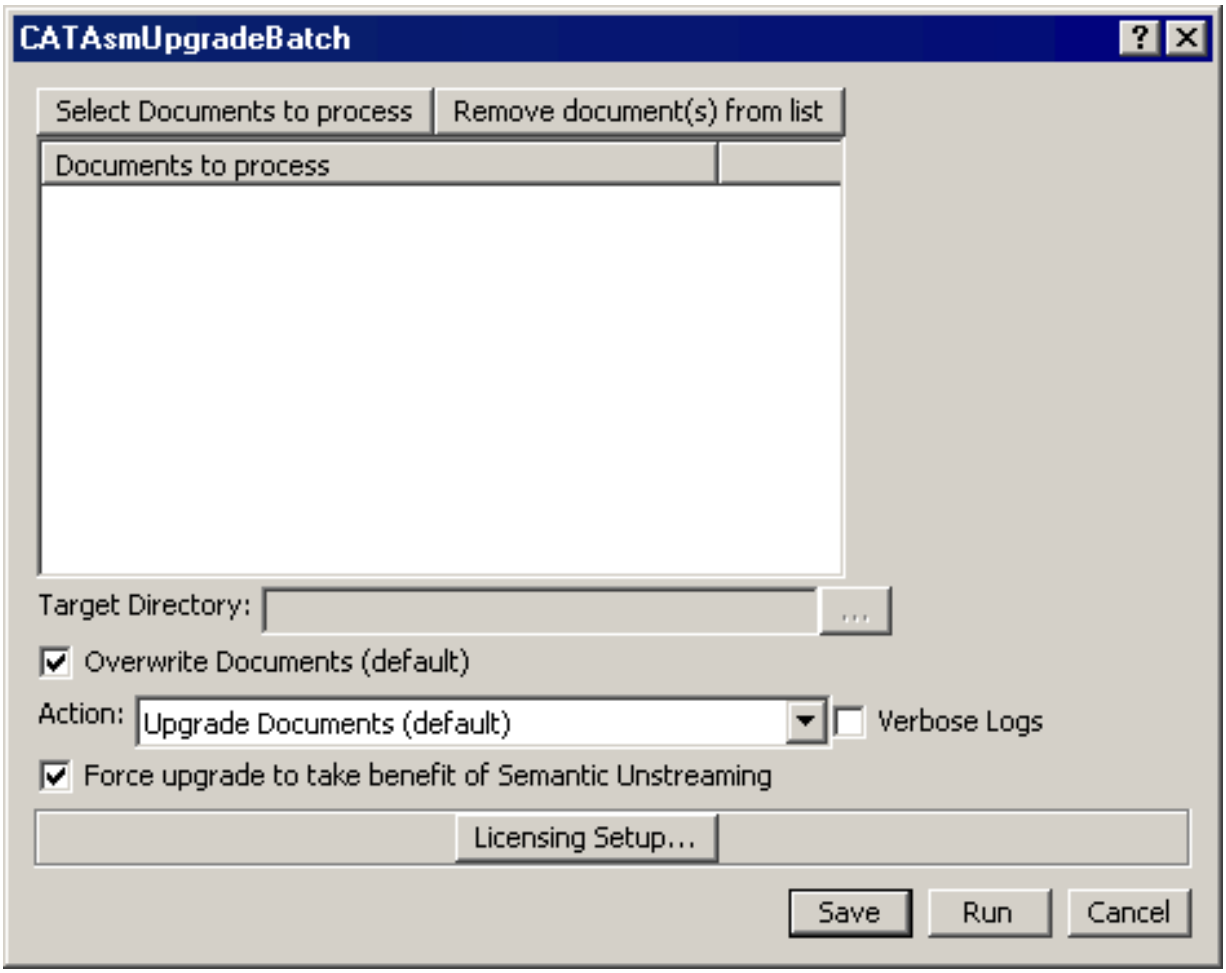

3. Click **Select Documents to process** button.
4. In the **File Selection** dialog box which appears, select the desired CATProduct documents to be processed.
5. Keep the **Overwrite Document** option checked if you wish, otherwise you must specify the **Target Directory** field.
6. Select the desired action: **Upgrade Documents** or **Check Documents Only**.
7. Check the **Verbose Logs** option if you whish to verbose the resulting log.
8. Check the **Force upgrade to take benefit of Semantic Unstreaming** option to force the CATPart documents upgrade to take benefit of Semantic Unstreaming.
9. Click **Run** to upgrade or check your CATProduct documents.

Result File Location

The result file location is available on:

- Windows in: C:\temp\upgrade.log
- Unix in: /tmp/upgrade.log

Example

Run the batch or the macro with the following Articulation CATProduct document.

The result file displays the following result:

```
[I] CATAsmProxyUpgrader Reporting:
Number of Constraint: 8
Number of tried upgraded Constraint: 7
Number of successfully upgraded
Constraint: 7
Number of unsuccessfully upgraded
Constraint: 0
Number of Publication: 0
Number of tried upgraded Publication: 0
Number of successfully upgraded
Publication: 0
Number of unsuccessfully upgraded
Publication: 0
Number of Context: 0
Number of tried upgraded Context: 0
Number of successfully upgraded
Context: 0
Number of unsuccessfully upgraded
Context: 0
[I] CATKweProxyUpgrader Reporting:
Number of Relation: 0
Number of tried upgraded Relation: 0
Number of successfully upgraded
Relation: 0
Number of unsuccessfully upgraded
Relation: 0
```

Glossary

A B C G L M O P R S U

A

active component A selected component currently being edited. This component is underlined in the specification tree.

active object An object currently being edited.

angle constraint A constraint used to define an angle or parallelism between two geometric elements.

assembly An entity composed of various components which have been positioned relative to each other.

B

bill of material A list of data about the properties of the components contained in the active component.

C

child component One or more components originating from a single component. Compare parent component.

coincidence constraint A constraint used to align two geometric elements, or get them to coincide.

component A reference integrated in an assembly. A component possesses characteristics related to how it is integrated in an assembly (for example, its relative location in an assembly).

constraint A geometrical or dimensional relation between several geometric elements of different components. It may be used to define the positioning of components.

context-specific representation A hierarchical design of an assembly in a specific context (for example: engineering or manufacturing).

contact constraint A constraint used to define a contact area between two elements (tangent or coincident).

F

fixed component A component for which all degrees of freedom are locked, in relation to the parent component.

G

geometric element The geometric elements which can be constrained in the Assembly workbench are:

point
line
plane (or plane surface from a model)
sphere
cone
cylinder

L

leaf component The last component at the end of each branch of the specification tree.

M

manipulation A freehand translation or rotation of a component with the mouse.

model A CATIA Version 4 model.

O

offset constraint A constraint used to define a distance or an offset between two geometric elements.

P

parent component A component that is hierarchically just above one or more components. Compare child component

part Within the Assembly workbench, it is either a part of the Part Design workbench, or a 3D entity whose geometry is contained in a model.

primary child component One or more components originating from the first level under the active component.

product A 3D entity which contains several components.

R

reference A product or part with its own characteristics. Compare component.

representation See context specific representation.

S

search order A hierarchical set of paths used when searching for the files included in the assembly. The search begins with the first path, and stops when the file is found.

snap Projects a geometric element onto another one.

subassembly An assembly contained within another assembly.

U

update In the Assembly workbench, updates the position of the constrained components so as to satisfy the constraint requirements.

Index

A B C D E F G H I J L M N O P R S T U V

A

analyzing
- dependences
- update

annotation
- creating
- specifying

ANSI standard

asm document

assembly
- exploding in a scene
- modify

Assembly Design workbench
- creating
- entering

assembly features

associativity

Auto modify part numbers with suffix option

B

bill of material

broken
- constraints

C

catalog

CATProduct

document

changing position

section plane(s)

children

clash

color coding

clearance

color coding

color coding

clash

clearance

contact

interference(s)

command

Add (Assembly Features)

Angle Constraint

Chain Mode

Change Constraint

Clash

Clash Detection

Coincidence Constraint

Comment and URLs

Compute Clash (Analyze)

Constraints (Analyze)

Contact Constraint

Copy constraint

Curve Type

Cut constraint

Default Mode

Define Multi-instantiation

Degrees of Freedom

Distance

Distance Constraint

Drag along Y axis

Drag around Y axis

Edit Grid

Edit Position and Dimensions

Existing Component with Positioning

Explode

Fast Multi-instantiation

Feature Element Type

Fix

Fix Component

Fix Together

Flag Note with Leader

Flexible/Rigid Sub-Assembly

Flip Horizontal

Flip Vertical

Generate CATPart from Product

Geometrical Element Type

Geometrical Target

Grid

Hole

Invert Normal

Manipulate

Manipulation on Clash

Mechanical Structure

Offset Constraint

Open

Paste constraint

Pocket

Point Type

Product Management (Tools)

Publication

Quick Constraint

Remove (Assembly Features)
Reset
Reset Position
Results Window
Reuse Pattern
Rotate Left
Rotate Right
Section Fill
Sectioning
Smart Move
Snap
Split (Assembly Features)
Stack Mode
Surface Type
Text with Leader
Translate or Rotation
Update
Update Status Unknown
Updated
Volume Cut
Volume Type
Weld Feature
compass
component
deleting
editing
fixing
moving
new
part
repeating
replacing
components

replacing
constraints
about
analyzing
angle
associating URLs
broken
coincidence
contact
creation mode
customizing
deactivating
deactivation mask
editing
name
negative offset
offset
parallelism
pattern
perpendicularity
positive offset
properties
sector for angle
symbols
tolerance for angle
contact
color coding
contextual command
Activate (constraint)
Add Set
Component Constraints
Copy
Deactivate (constraint)

Design Mode
Expand all
Expand node
Flexible/Rigid Sub-Assembly
Group in new set
Move Set after
Move Set inside
Paste
Remove Set
Set as new root
Visualization Mode
contextual part
creating
annotation
section cut(s)
section plane(s)
creating a part template
creation mode
constraints
customizing
constraints
sectioning

D

deleting
component
dependences
analyzing
design in Assembly context
detecting
collisions between 2D sections
document
CATProduct

non-retrieved

document chooser

document template

external document

methodology

part template

window

document template window

auto modify part numbers with suffix option

automatic input

edit list button

manual input

new document

same document

E

Edit Grid command

Edit List... button

Edit Position and Dimensions command

editing

component

constraints

EN standard

exploding

assembly in a scene

external document

external reference

F

family

fixing

component

flexible

Flip Horizontal command

Flip Vertical command

freedom (degrees of)

G

Geometrical Target command

graphic properties

Grid command

H

html format

I

initial computation mode

interference(s)

instance

interference(s)

color coding

initial computation mode

Invert Normal command

ISO standard

J

JIS standard

L

link

listing report

lock symbol

M

manipulating

section plane(s)

manual update

measure

Offset Constraint

modify

assembly

moving

section plane(s)

N

name

constraints

new

component

New Document

non-retrieved

document

O

Offset Constraint

measure

option

Fix in Space
overconstrained assembly

P

part
Part Design
Part Design pattern
part template
creating
instantiating
positioning
section planes along a curve or edge
section planes on geometrical target
section planes using the Edit Position and Dimensions command
product
Product Structure
properties
assembly
assembly mass
product
published element

R

re-dimensioning
section plane(s)
relationship
replace viewer
replacing
component
components
Reset Position command

results window
sectioning
Results Window command
rigid
Rotate Left command
Rotate Right command
rotating
section plane(s)

S

Same Document
scenes
exploding assemblies
section cut(s)
creating
section plane(s)
along a curve or edge
changing position
creating
manipulating
moving
on geometrical target
re-dimensioning
rotating
using the Edit Position and Dimensions command
sectioning
about
collision detection
creating section planes
customizing settings
results window
Sectioning command

shortcut
specification tree
standard part
sub-assembly
sub-toolbar
Assembly Features
Multi-Instantiation
Snap

T

toolbar
Annotations
Assembly Features
Constraints
Move
Product Structure Tools
Scenes
Space Analysis
Update
User Selection Filter
Tools Options - 3D Annotations Infrastructure
Annotation
Display
Manipulators
Tolerancing
View/Annotation Plane
Tools Options - Assembly Design
Constraints
General
Tools Options - DMU Space Analysis
DMU Sectioning
Tools Options - Parameters and Measure

Symbols
txt format

U

update
analyzing
URLs
Utility
Data Upgrade for Large Assemblies Performances

V

viewer
sectioning
Visualization Mode
annotation option
option
Volume Cut command